YAMAHA

2015

⚠ Read this manual carefully before operating this vehicle.

⚠ Il convient de lire attentivement ce manuel avant la première utilisation du véhicule.

OWNER'S SERVICE MANUAL

MANUEL D'ATELIER DU PROPRIETAIRE

WR250F
WR250FF

2GB-28199-70

⚠ **Read this manual carefully before operating this vehicle. This manual should stay with this vehicle if it is sold.**

⚠ **Il convient de lire attentivement ce manuel avant la première utilisation du véhicule. Le manuel doit être remis avec le véhicule en cas de vente de ce dernier.**

YAMAHA

2015

Read this manual carefully before operating this vehicle.

OWNER'S SERVICE MANUAL

WR250F
WR250FF

2GB-28199-70-E0

⚠ **Read this manual carefully before operating this vehicle. This manual should stay with this vehicle if it is sold.**

WR250F
WR250FF
OWNER'S SERVICE MANUAL

First edition, September 2014

Printed in Japan.

INTRODUCTION

Congratulations on your purchase of a Yamaha WR series. This model is the culmination of Yamaha's vast experience in the production of pacesetting racing machines. It represents the highest grade of craftsmanship and reliability that have made Yamaha a leader.
This manual explains operation, inspection, basic maintenance and tuning of your machine. If you have any questions about this manual or your machine, please contact your Yamaha dealer.
The design and manufacture of this Yamaha machine fully comply with the emissions standards for clean air applicable at the date of manufacture. Yamaha has met these standards without reducing the performance or economy of operation of the machine. To maintain these high standards, it is important that you and your Yamaha dealer pay close attention to the recommended maintenance schedules and operating instructions contained within this manual.

TIP

Yamaha continually seeks advancements in product design and quality. Therefore, while this manual contains the most current product information available at the time of printing, there may be minor discrepancies between your machine and this manual. If you have any questions concerning this manual, please consult your Yamaha dealer.

⚠ WARNING

PLEASE READ THIS MANUAL CAREFULLY AND COMPLETELY BEFORE OPERATING THIS MACHINE. DO NOT ATTEMPT TO OPERATE THIS MACHINE UNTIL YOU HAVE ATTAINED A SATISFACTORY KNOWLEDGE OF ITS CONTROLS AND OPERATING FEATURES AND UNTIL YOU HAVE BEEN TRAINED IN SAFE AND PROPER RIDING TECHNIQUES. REGULAR INSPECTIONS AND CAREFUL MAINTENANCE, ALONG WITH GOOD RIDING SKILLS, WILL ENSURE THAT YOU SAFETY ENJOY THE CAPABILITIES AND THE RELIABILITY OF THIS MACHINE.

IMPORTANT MANUAL INFORMATION

Particularly important information is distinguished in this manual by the following notations.

⚠	**This is the safety alert symbol. It is used to alert you to potential personal injury hazards. Obey all safety messages that follow this symbol to avoid possible injury or death.**
⚠ WARNING	**A WARNING indicates a hazardous situation which, if not avoided, could result in death or serious injury.**
NOTICE	**A NOTICE indicates special precautions that must be taken to avoid damage to the vehicle or other property.**
TIP	A TIP provides key information to make procedures easier or clearer.

SAFETY INFORMATION

THIS MACHINE IS DESIGNED STRICTLY FOR COMPETITION USE, ONLY ON A CLOSED COURSE. It is illegal for this machine to be operated on any public street, road, or highway. Off-road use on public lands may also be illegal. Please check local regulations before riding.

- THIS MACHINE IS TO BE OPERATED BY AN EXPERIENCED RIDER ONLY.
  Do not attempt to operate this machine at maximum power until you are totally familiar with its characteristics.
- THIS MACHINE IS DESIGNED TO BE RIDDEN BY THE OPERATOR ONLY.
  Do not carry passengers on this machine.
- ALWAYS WEAR PROTECTIVE APPAREL.
  When operating this machine, always wear an approved helmet with goggles or a face shield. Also wear heavy boots, gloves, and protective clothing. Always wear proper fitting clothing that will not be caught in any of the moving parts or controls of the machine.
- ALWAYS MAINTAIN YOUR MACHINE IN PROPER WORKING ORDER.
  For safety and reliability, the machine must be properly maintained. Always perform the pre-operation checks indicated in this manual.
  Correcting a mechanical problem before you ride may prevent an accident.
- GASOLINE IS HIGHLY FLAMMABLE.
  Always turn off the engine while refueling. Take care to not spill any gasoline on the engine or exhaust system. Never refuel in the vicinity of an open flame, or while smoking.
- GASOLINE CAN CAUSE INJURY.
  If you should swallow some gasoline, inhale excess gasoline vapors, or allow any gasoline to get into your eyes, contact a doctor immediately. If any gasoline spills onto your skin or clothing, immediately wash skin areas with soap and water, and change your clothes.
- ONLY OPERATE THE MACHINE IN AN AREA WITH ADEQUATE VENTILATION.
  Never start the engine or let it run for any length of time in an enclosed area. Exhaust fumes are poisonous. These fumes contain carbon monoxide, which by itself is odorless and colorless. Carbon monoxide is a dangerous gas which can cause unconsciousness or can be lethal.
- PARK THE MACHINE CAREFULLY; TURN OFF THE ENGINE.
  Always turn off the engine if you are going to leave the machine. Do not park the machine on a slope or soft ground as it may fall over.
- THE ENGINE, EXHAUST PIPE AND MUFFLER WILL BE VERY HOT AFTER THE ENGINE HAS BEEN RUN.
  Be careful not to touch them or to allow any clothing item to contact them during inspection or repair.
- PROPERLY SECURE THE MACHINE BEFORE TRANSPORTING IT.
  For safety, drain the gasoline from the fuel tank before transporting the vehicle.

HOW TO USE THIS MANUAL

In this manual, descriptions of installation, removal, disassembly, assembly, check, and adjustment procedures are laid out with the individual steps in sequential order.

- The manual is divided into chapters and each chapter is divided into sections. The current section title “1” is shown at the top of each page.
- Sub-section titles “2” appear in smaller print than the section title.
- To help identify parts and clarify procedure steps, there are exploded diagrams “3” at the start of each removal and disassembly section.
- Numbers “4” are given in the order of the jobs in the exploded diagram. A number indicates a removal or a disassembly step.
- Symbols “5” indicate parts to be lubricated or replaced.
  Refer to “SYMBOLS”.
- A job instruction chart “6” accompanies the exploded diagram, providing the order of jobs, the names of parts, the notes in jobs, etc.
- Jobs “7” requiring more information (such as special tools and technical data) are described sequentially.

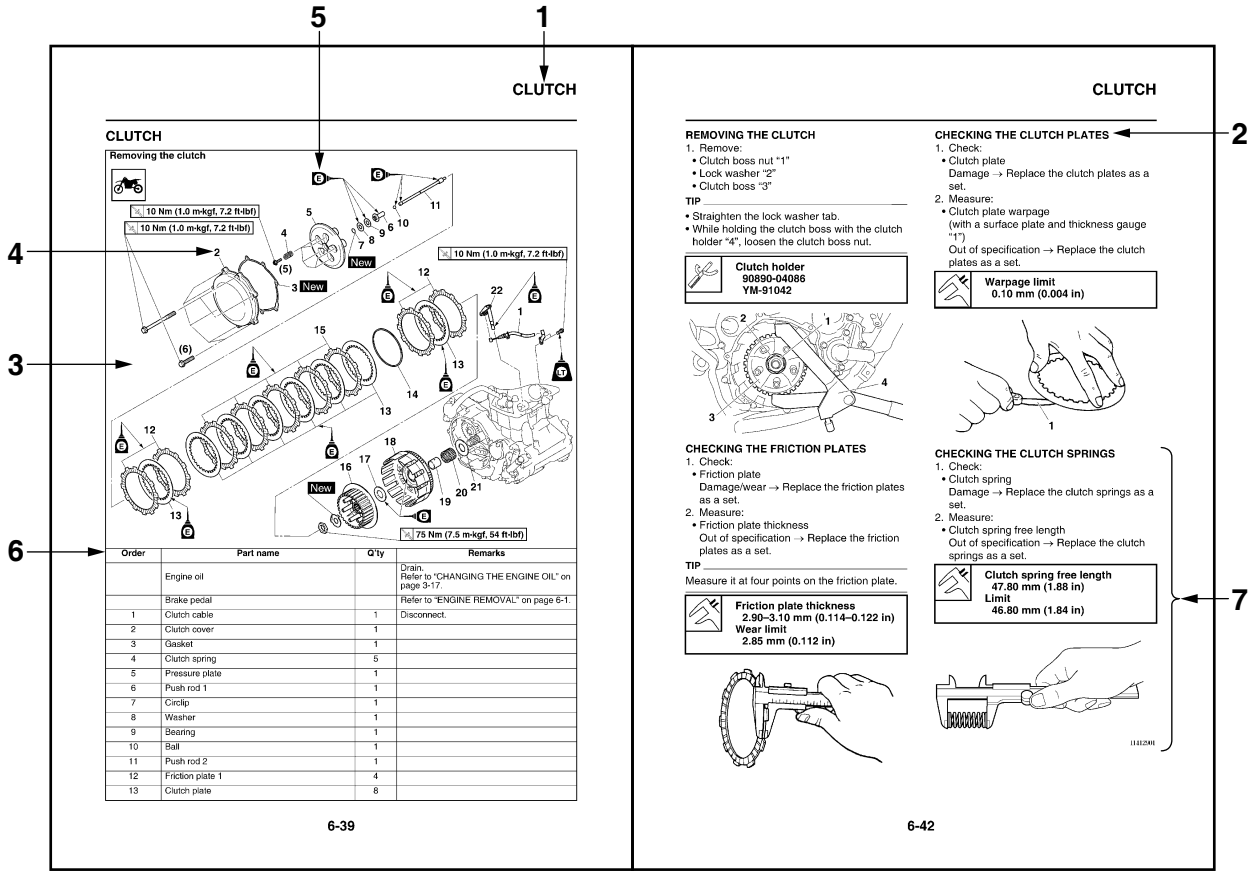

SYMBOLS

The following symbols are used in this manual for easier understanding.

TIP

The following symbols are not relevant to every vehicle.

SYMBOL	DEFINITION	SYMBOL	DEFINITION
	Serviceable with engine mounted	G	Gear oil
	Filling fluid	M	Molybdenum disulfide oil
	Lubricant	BF	Brake fluid
	Special tool	B	Wheel bearing grease
	Tightening torque	LS	Lithium-soap-based grease
	Wear limit, clearance	M	Molybdenum disulfide grease
	Engine speed	S	Silicone grease
	Electrical data	LT	Locking agent (LOCTITE®)
E	Engine oil	New	Replace the part with a new one.

TABLE OF CONTENTS

GENERAL INFORMATION

LOCATION OF IMPORTANT LABELS

Please read the following important labels carefully before operating this vehicle.

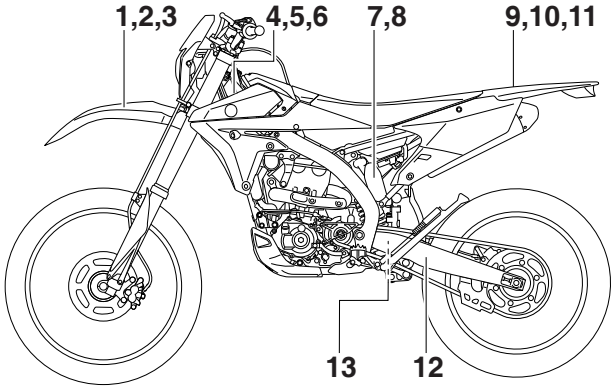

CAN

1

Premium unleaded gasoline only.

3FB-2415E-02

2

Essence super sans plomb seulernent.

3FB-2415E-12

3

THIS VEHICLE IS A RESTRICTED USE MOTORCYCLE AND IS NOT INTENDED FOR USE ON PUBLIC HIGHWAYS.

CE VÉHICULE EST UNE MOTOCYCLETTE À USAGE RESTREINT DONT L'USAGE N'EST PAS DESTINÉ AUX VOIES PUBLIQUES.

3PT-2416E-10

4

MFD. BY YAMAHA MOTOR CO., LTD. MM / YY MADE IN JAPAN
RESTRICTED-USE MOTORCYCLE

FABRIQUÉ PAR YAMAHA MOTOR CO., LTD. MM / YY FABRIQUÉ AU JAPON
MOTOCYCLETTE À USAGE RESTREINT

****

3PT-21186-11

5

CANADA · NSVAC · TROPSNART · CMVSS · 506

This spark ignition system meets all requlrements of the Canadian Interference Causing Equipment Regulations.

Ce système d'allumage par étincelle de véhicule respecte toutes les exlgences du Règlement sur le matériel brouilleur du Canada.

3JK-82377-10

7

⚠WARNING

This unit contains high pressure nitrogen gas.
Mishandling can cause explosion.
- Read owner's manual for instructions.
- Do not incinerate, puncture or open.

⚠AVERTISSEMENT

Cette unité contient de l'azote à haute pression.
Une mauvaise manipulation peut entrainer d'expiosion.
- Voir le manuel d'utilisateur pour les instructions.
- Ne pas brûler ni perforer ni ouvrir.

4AA-22259-70

9

⚠ WARNING

- BEFORE YOU OPERATE THIS VEHICLE, READ THE OWNER'S MANUAL AND ALL LABELS.
- NEVER CARRY A PASSENGER. You increase your risk of losing control if you carry a passenger.
- NEVER OPERATE THIS VEHICLE ON PUBLIC ROADS. You can collide with another vehicle if you operate this vehicle on a public road.
- ALWAYS WEAR AN APPROVED MOTORCYCLE HELMET, eye protection, and protective clothing.
- EXPERIENCED RIDER ONLY.

5PA-2118K-00

10

⚠ AVERTISSEMENT

- LIRE LE MANUEL DU PROPRIETAIRE AINSI QUE TOUTES LES ETIQUETTES AVANT D'UTILISER CE VEHICULE.
- NE JAMAIS TRANSPORTER DE PASSAGER. La conduite avec passager augmente les risques de perte de contrôle.
- NE JAMAIS ROULER SUR DES CHEMINS PUBLICS. Vous pourriez entrer en collision avec un autre véhicule.
- TOUJOURS PORTER UN CASQUE DE MOTOCYCLISTE APPROUVE, des lunettes et des vêtements de protection.
- EXCLUSIVEMENT POUR L'USAGE D'UN CONDUCTEUR EXPERIMENTE.

5PA-2118K-10

12

TIRE INFORMATION

Cold tire normal pressure should be set as follows.
FRONT : 100kPa, {1.00kgf/cm²}, 15psi
REAR : 100kPa, {1.00kgf/cm²}, 15psi

3RV-21668-A0

13

INFORMATION SUR LES PNEUS

La pression des pneus à froid doit normalement être réglée comme suit.
AVANT : 100kPa, {1.00kgf/cm²}, 15psi
ARRIERE : 100kPa, {1.00kgf/cm²}, 15psi

3RV-21668-B0

EUR

6

CE

YAMAHA MOTOR CO., LTD.
SHIZUOKA JAPAN

YAMAHA 4GB-2155A-00

8

4AA-22259-40

11

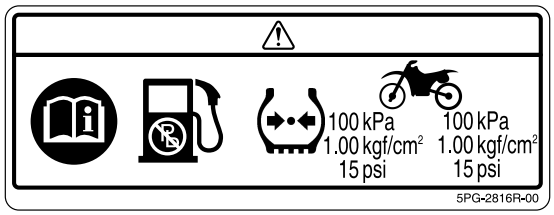

5PG-2816R-00

AUS, NZL, ZAF

8

12

TIRE INFORMATION

Cold tire normal pressure should be set as follows.
FRONT : 100kPa, {1.00kgf/cm^2}, 15psi
REAR : 100kPa, {1.00kgf/cm^2}, 15psi

3RV-21668-A0

9

⚠ WARNING

- BEFORE YOU OPERATE THIS VEHICLE, READ THE OWNER'S MANUAL AND ALL LABELS.
- NEVER CARRY A PASSENGER. You increase your risk of losing control if you carry a passenger.
- NEVER OPERATE THIS VEHICLE ON PUBLIC ROADS. You can collide with another vehicle if you operate this vehicle on a public road.
- ALWAYS WEAR AN APPROVED MOTORCYCLE HELMET, eye protection, and protective clothing.
- EXPERIENCED RIDER ONLY.

5PA-2118K-00

DESCRIPTION

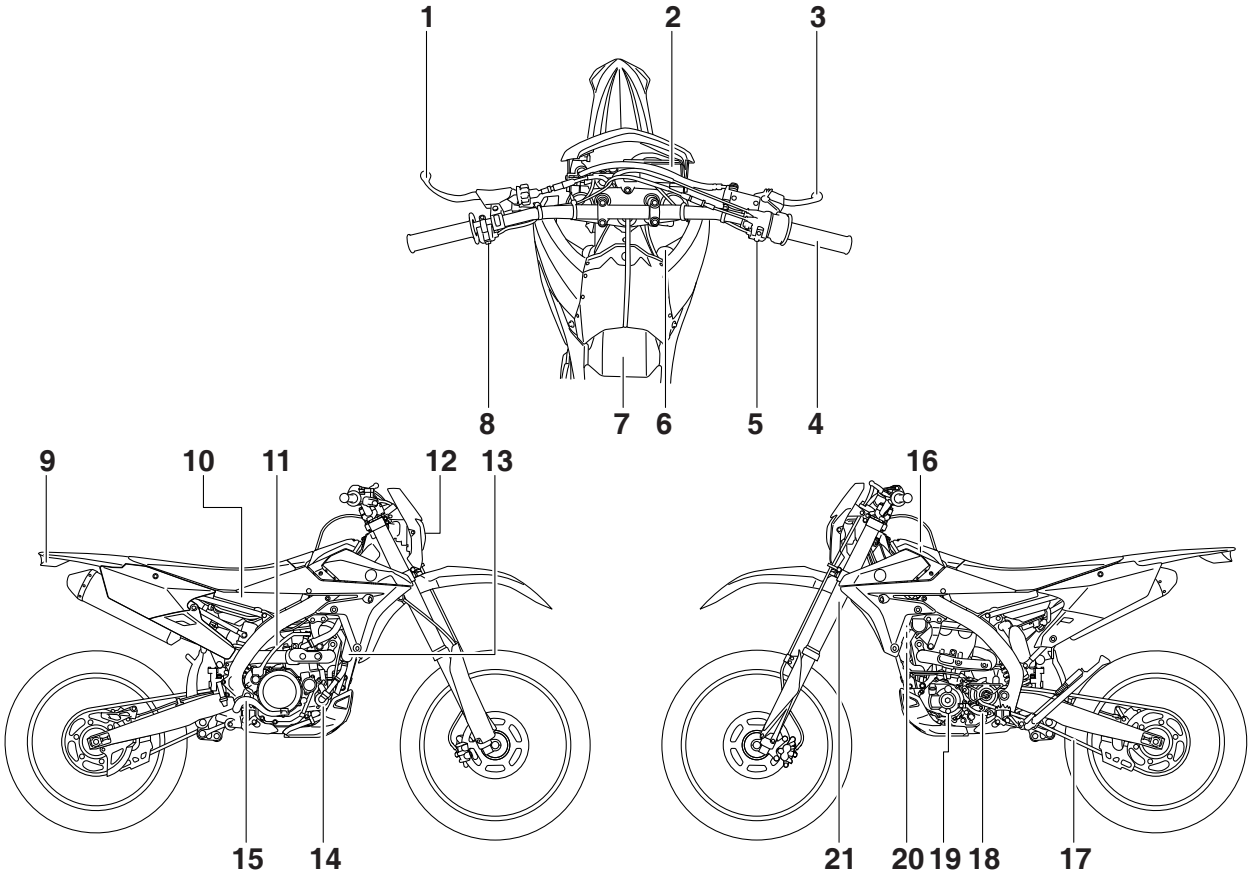

1. Clutch lever
2. Multi-function display
3. Front brake lever
4. Throttle grip
5. Start switch
6. Radiator cap
7. Fuel tank cap
8. Engine stop switch
9. Taillight
10. Fuel tank
11. Kickstarter lever
12. Headlight
13. Radiator
14. Coolant drain bolt
15. Rear brake pedal
16. Air filter
17. Drive chain
18. Shift pedal
19. Oil level check window
20. Starter knob/idle screw
21. Front fork

TIP

Designs and specifications of the vehicle are subject to change without notice. Therefore, please note that the descriptions in this manual may be different from those for the vehicle you have purchased.

IDENTIFICATION

There are two significant reasons for knowing the serial number of your vehicle:

1. When ordering parts, you can give the number to your Yamaha dealer for positive identification of the model you own.
2. If your vehicle is stolen, the authorities will need the number to search for and identify your vehicle.

VEHICLE IDENTIFICATION NUMBER

The vehicle identification number “1” is stamped into the right side of the frame.

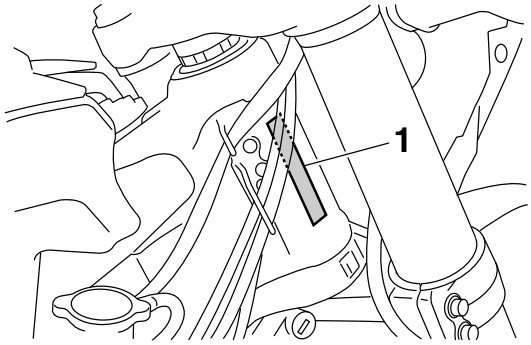

ENGINE SERIAL NUMBER

The engine serial number “1” is stamped into the elevated part of the right-side of the engine.

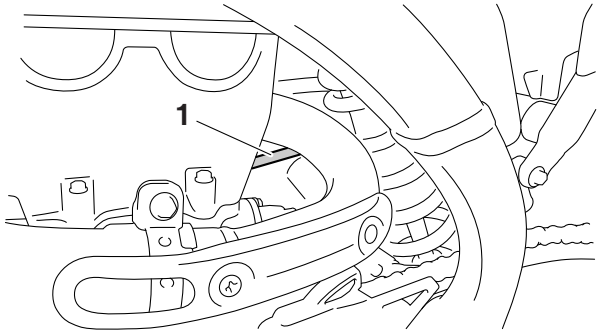

VEHICLE EMISSION CONTROL INFORMATION LABEL

The Vehicle Emission Control Information label “1” is affixed at the location in the illustration. This label shows specifications related to exhaust emissions as required by federal law, state law and Environment Canada.

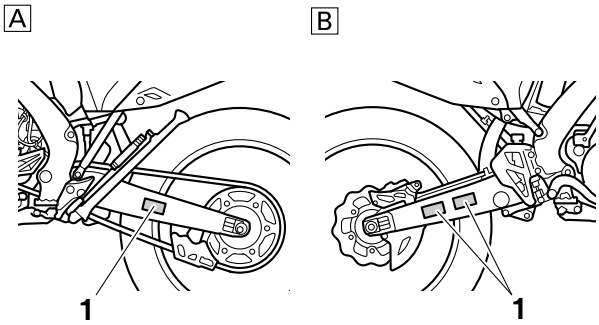

A: For Canada
B: For USA and Canada

FEATURES

OUTLINE OF THE FI SYSTEM

The main function of a fuel supply system is to provide fuel to the combustion chamber at the optimum air-fuel ratio in accordance with the engine operating conditions and the atmospheric temperature. In the conventional carburetor system, the air-fuel ratio of the mixture to be supplied to the combustion chamber is determined by the amount of intake air and fuel that is measured on the basis of the jets to be used in the carburetor.

Despite the same amount of intake air, the fuel amount requirement varies with the engine operating conditions (acceleration, deceleration, and operation under a heavy load). The carburetor that measures fuel through the use of jets are provided with various auxiliary devices, so that the optimum air fuel ratio can be obtained to accommodate frequent changes in the operating conditions of the engine. This model has adopted an electronically controlled fuel injection (FI) system, in place of the conventional carburetor system. This system can obtain the optimum air-fuel ratio required by the engine at all times by using a microprocessor that regulates the fuel injection amount according to the engine operating conditions detected by various sensors.

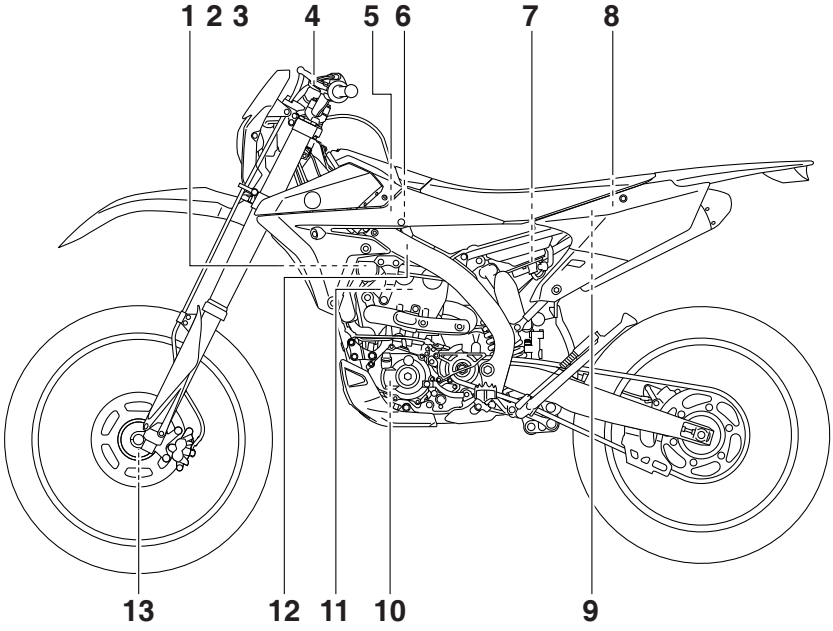

1. Fuel injector
2. Throttle position sensor
3. Intake air pressure sensor
4. Engine trouble warning light
5. Intake air temperature sensor
6. ECU
7. Fuel pump
8. Battery
9. Lean angle sensor
10. Crankshaft position sensor
11. Coolant temperature sensor
12. Ignition coil
13. Speed sensor

FI SYSTEM

The fuel pump delivers fuel to the fuel injector via the fuel filter. The pressure regulator maintains the fuel pressure that is applied to the fuel injector at only 324 kPa (3.24 kgf/cm^2, 47.0 psi). Accordingly, when the energizing signal from the ECU energizes the fuel injector, the fuel passage opens, causing the fuel to be injected into the intake manifold only during the time the passage remains open. Therefore, the longer the length of time the fuel injector is energized (injection duration), the greater the volume of fuel that is supplied. Conversely, the shorter the length of time the fuel injector is energized (injection duration), the lesser the volume of fuel that is supplied.

The injection duration and the injection timing are controlled by the ECU. Signals input from the throttle position sensor, the coolant temperature sensor, the crankshaft position sensor, the intake air pressure sensor, and the intake air temperature sensor enable the ECU to determine the injection duration. The injection timing is determined through the signals from the crankshaft position sensor. As a result, the volume of fuel that is required by the engine can be supplied at all times in accordance with the driving conditions.

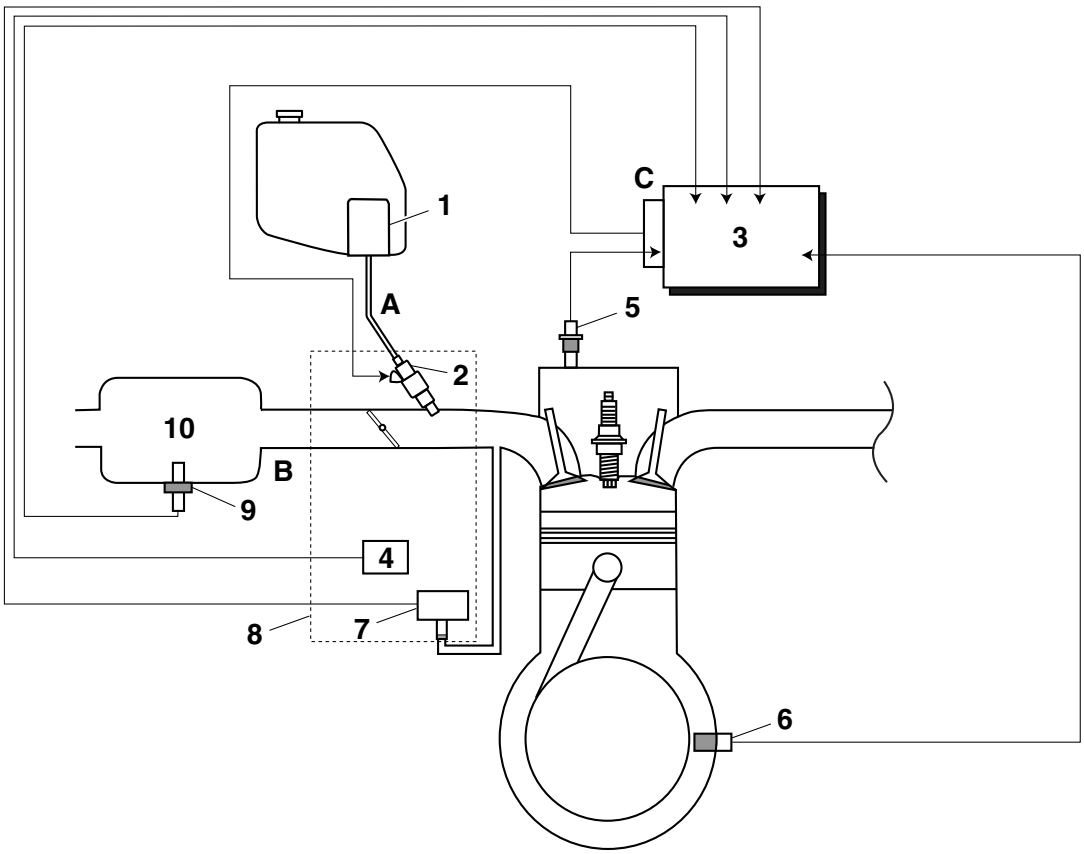

1. Fuel pump
2. Fuel injector
3. ECU
4. Throttle position sensor
5. Coolant temperature sensor
6. Crankshaft position sensor
7. Intake air pressure sensor
8. Throttle body
9. Intake air temperature sensor
10. Air filter case

A. Fuel system
B. Intake system
C. Control system

INCLUDED PARTS

SPARK PLUG WRENCH

The spark plug wrench “1” is used to remove or install the spark plug.

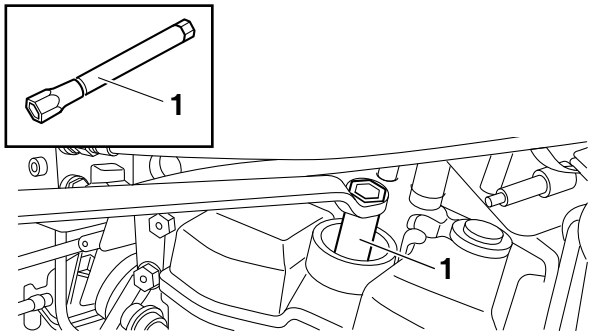

NIPPLE WRENCH

The nipple wrench “1” is used to tighten the spoke.

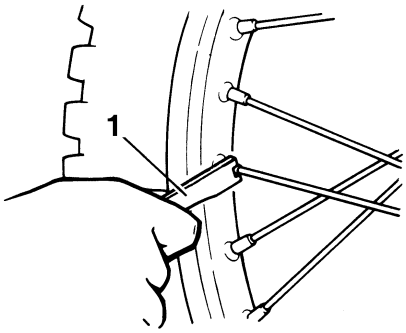

HANDLEBAR PROTECTOR

Install the handlebar protector “1” so that the notch “a” face backward.

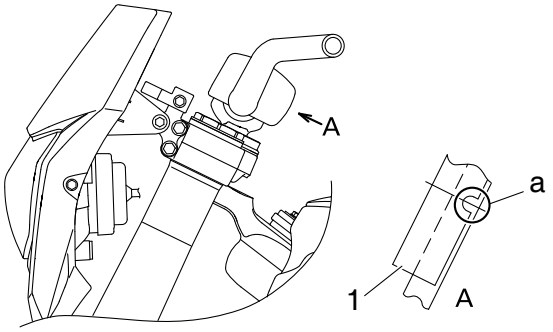

FUEL HOSE JOINT COVER

The fuel hose joint covers “1” are used to prevent mud, dust, and other foreign materials from entering the inside when the fuel hose is disconnected.

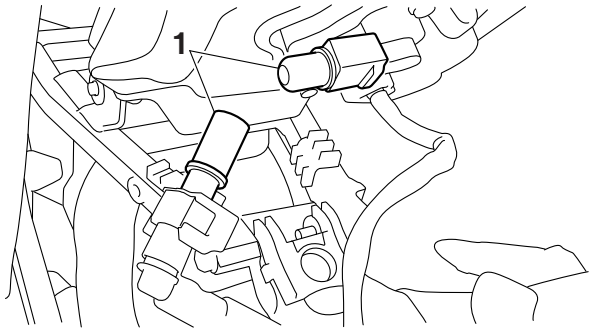

COUPLER FOR CONNECTING OPTIONAL PART

The coupler “1” is used for connecting the optional Power Tuner and so on.

NOTICE

When no optional parts, etc. are connected, connect the connection terminal to the original coupler.
Before disconnecting the coupler, thoroughly wipe off any mud or water stuck to it.

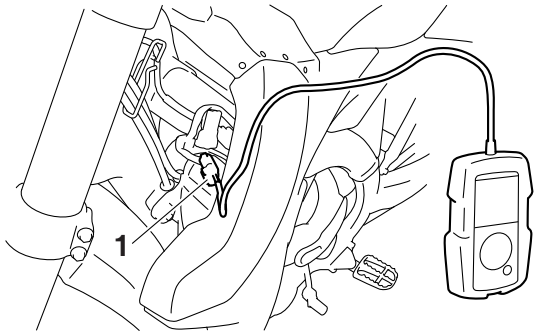

Part name	Part number
GYTR Power Tuner (For USA)	33D-H59C0-V0-00
YZ Power Tuner (Except for USA)	33D-859C0-10

The Power Tuner is an optional part.

IMPORTANT INFORMATION

PREPARATION FOR REMOVAL AND DISASSEMBLY

1. Before the jobs, completely remove mud, dust, and the like in order to prevent the entry of them into the inside during the jobs.

- Before cleaning with high-pressure water of washers, cover the following parts.
  Air duct
  Silencer exhaust port
  Drain hole on the cylinder head (right side)
  Hole under the water pump housing

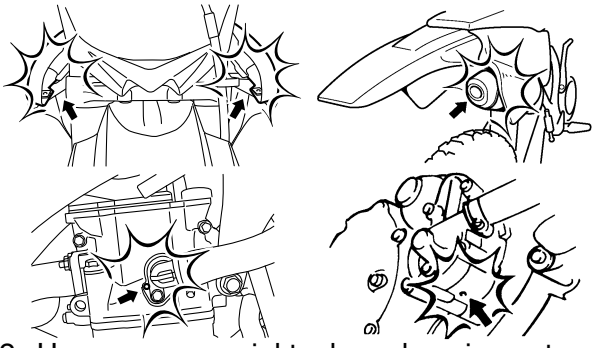

2. Use proper special tools and equipment. See “SPECIAL TOOLS”.

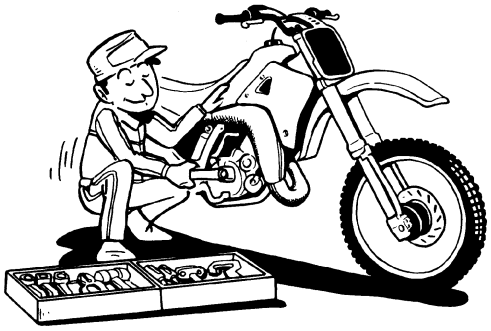

3. During disassembly, check and measure the required parts, and make a record of them so that you may refer to the record when installing them. Moreover, arrange gears, cylinders, pistons, and other parts for each section so as not to confuse or lose them.

4. During disassembly, clean each of the parts, and store them in trays for each section.
5. Flammable. Keep servicing areas away from any source of fire.
6. During servicing, take special care not to receive an injury or a burn on the engine, the exhaust pipe, the silencer, or the like.
7. If coolant is left adhered to the chassis, paint and plating will be damaged. Therefore, rinse it out with water in good time.

WARNING

Coolant is potentially harmful and should be handled with special care.

- **If it enters your eyes, wash it away with water enough and then get medical attention**
- **If it splashes on your skin or clothes, quickly wash it away with water and then with soapy water.**
- **If it is swallowed, immediately induce vomiting and get medical attention.**

REPLACEMENT PARTS

Make sure that the parts and grease or oil to be used for repair of the vehicle, including periodic replacement parts, are new YAMAHA genuine parts and recommended parts.
Do not use any used parts, because these may not be genuine though they have similar appearances or because the quality may be changed by aging.

GASKETS, OIL SEALS AND O-RINGS

1. When overhauling the engine, replace all gaskets and O-rings. All gasket surfaces, oil seal lips, and O-rings must be cleaned so that there may be no dust on them.
2. During assembly, always apply proper oil to bearings and proper grease to oil seal lips before installation.

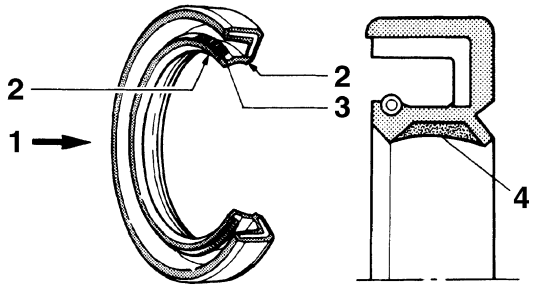

1. Oil
2. Lip
3. Spring
4. Grease

LOCK WASHERS/PLATES AND COTTER PINS

After removal, replace lock washers/plates “1” and cotter pins with new ones. After the bolt or nut has been tightened to specification, firmly bend the lock tabs along a flat of the bolt or nut.

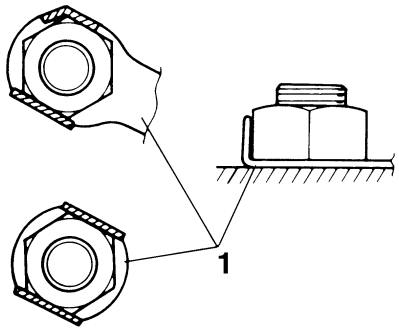

BEARINGS AND OIL SEALS

Install bearings “1” and oil seals “2” with their manufacturer’s marks or size symbols facing outward. During installation of an oil seal, make sure that its main lip faces the oil chamber (the target to be sealed). Before installation, always apply a light coat of grease to the oil seal lip.

NOTICE

Do not spin the bearing with compressed air because this will damage the bearing surfaces.

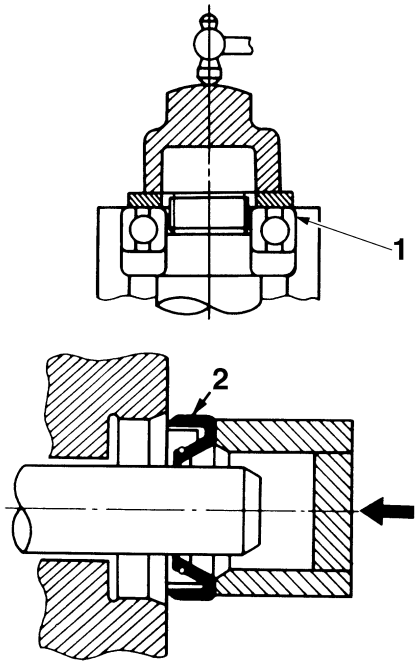

CIRCLIPS

When assembling parts, always use new circlips. During installation of a circlip, make sure that the edge “2” of the circlip “1” is positioned opposite to the force “3” that the circlip receives. Install the circlip with its end aligned with the center of the spline, without opening the circlip more than necessary.

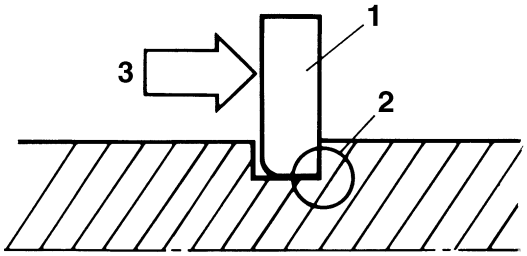

BASIC SERVICE INFORMATION

ELECTRICAL SYSTEM

Electrical parts handling

NOTICE

Never disconnect a battery lead while the engine is running; otherwise, the electrical components could be damaged.

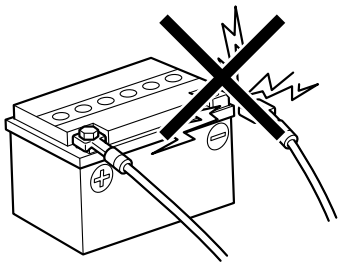

NOTICE

When disconnecting the battery leads from the battery, be sure to disconnect the negative battery lead first, then the positive battery lead. If the positive battery lead is disconnected first and a tool or similar item contacts the vehicle, a spark could be generated, which is extremely dangerous.

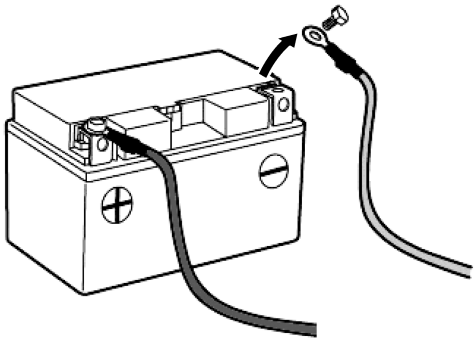

TIP

If a battery lead is difficult to disconnect due to rust on the battery terminal, remove the rust using hot water.

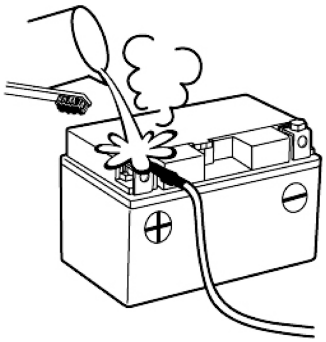

NOTICE

Be sure to connect the battery leads to the correct battery terminals. Reversing the battery lead connections could damage the electrical components.

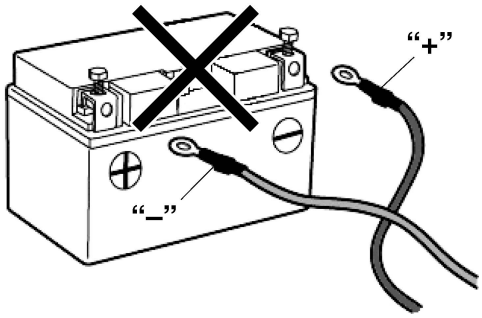

NOTICE

When connecting the battery leads to the battery, be sure to connect the positive battery lead first, then the negative battery lead. If the negative battery lead is connected first and a tool or similar item contacts the vehicle while the positive battery lead is being connected, a spark could be generated, which is extremely dangerous.

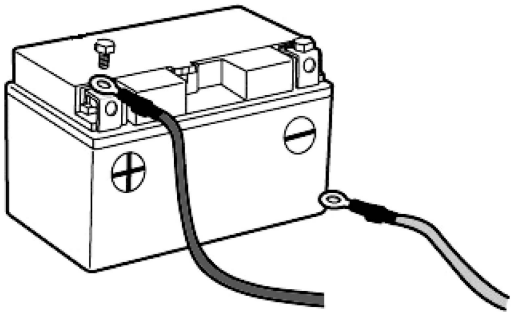

NOTICE

Make sure that the multi-function display goes off after pushing and holding the engine stop switch before disconnecting or connecting any electrical components.

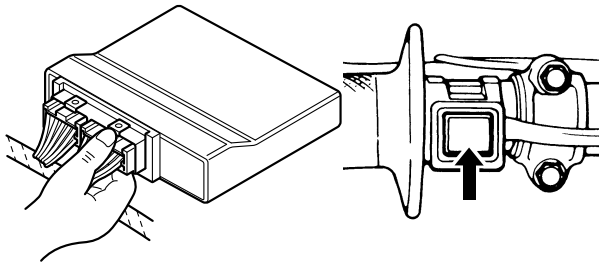

NOTICE

Handle electrical components with special care, and do not subject them to strong shocks.

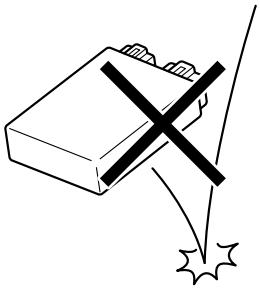

NOTICE

Electrical components are very sensitive to and can be damaged by static electricity. Therefore, never touch the terminals and be sure to keep the contacts clean.

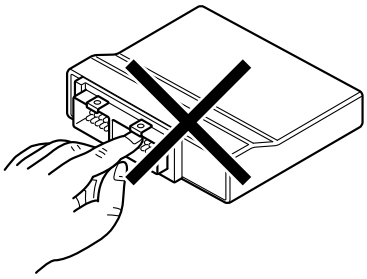

TIP

Push and hold the engine stop switch to turn off the multi-function display when resetting the ECU (Electronic Control Unit). Disconnect the starter motor lead of the starter relay, and then push the starter switch. Be sure to wait for five seconds or longer before pushing the start switch after the multi-function display goes off.

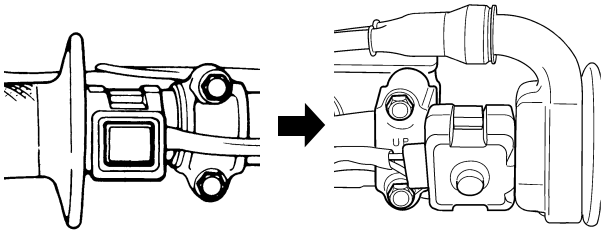

Checking the electrical system

TIP

Before checking the electrical system, make sure that the battery voltage is at least 12 V.

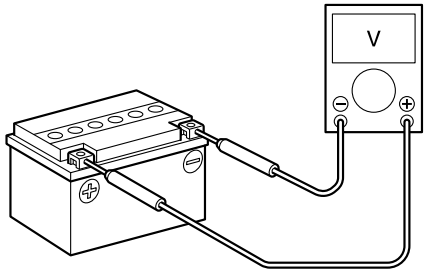

NOTICE

Never insert the tester probes into the coupler terminal slots. Always insert the probes from the opposite end "a" of the coupler, taking care not to loosen or damage the leads.

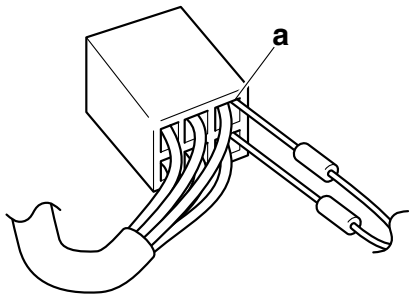

NOTICE

For waterproof couplers, never insert the tester probes directly into the coupler. When performing any checks using a waterproof coupler, use the specified test harness or a suitable commercially available test harness.

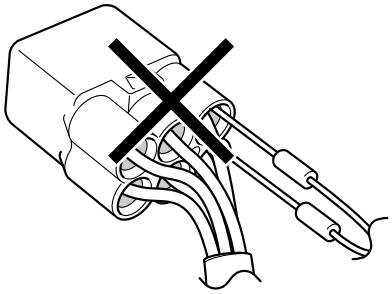

Checking the connections

Check the leads, couplers, and connectors for stains, rust, moisture, etc.

1. Disconnect:
   - Lead
   - Coupler
   - Connector

NOTICE

- **When disconnecting a coupler, release the coupler lock, hold both sections of the coupler, and then disconnect the coupler.**
- **There are many types of coupler locks; therefore, be sure to check the type of coupler lock before disconnecting the coupler.**

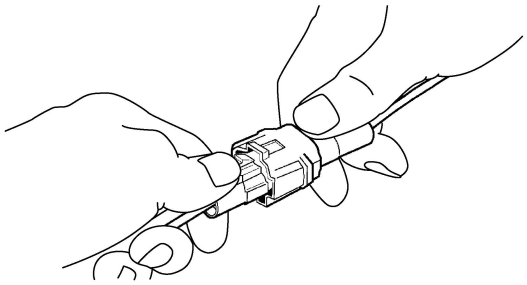

NOTICE

When disconnecting a connector, do not pull the leads. Hold both sections of the connector, and then disconnect the connector.

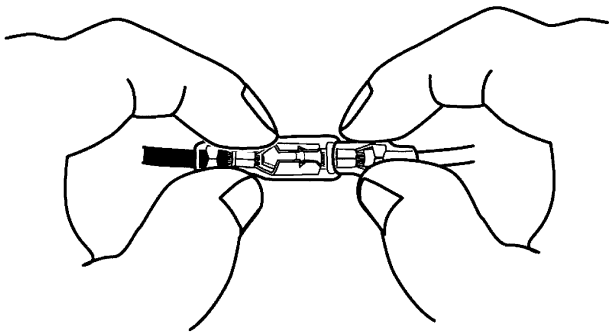

2. Check:
   - Lead
   - Coupler
   - Connector

   Moisture → Dry with compressed air.
   Rust/stains → Connect and disconnect several times.

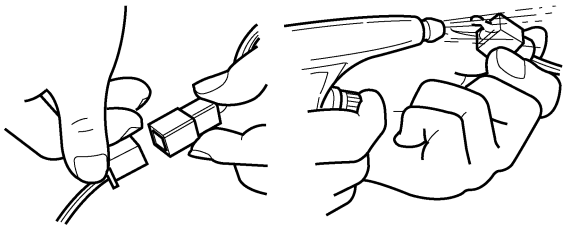

3. Check:
   - All connections

   Loose connection → Connect properly.

TIP

- If the pin “1” on the terminal is flattened, bend it up.
- After disassembling or assembling a coupler, pull on the leads to make sure that they are installed securely.

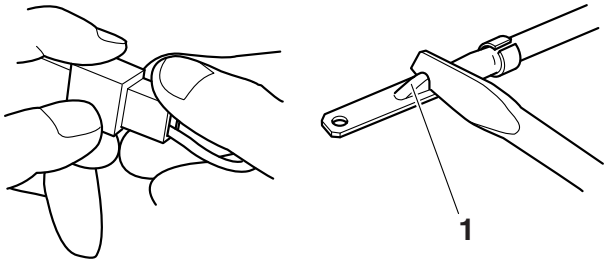

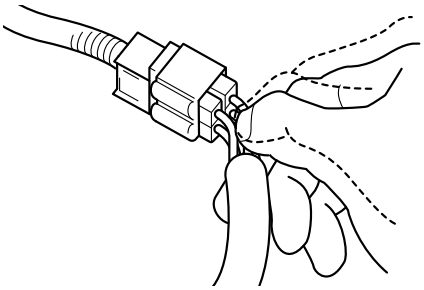

4. Connect:
   - Lead
   - Coupler
   - Connector

TIP

- When connecting a coupler or connector, make sure that both terminals are connected securely.
- Make sure all connections are tight.

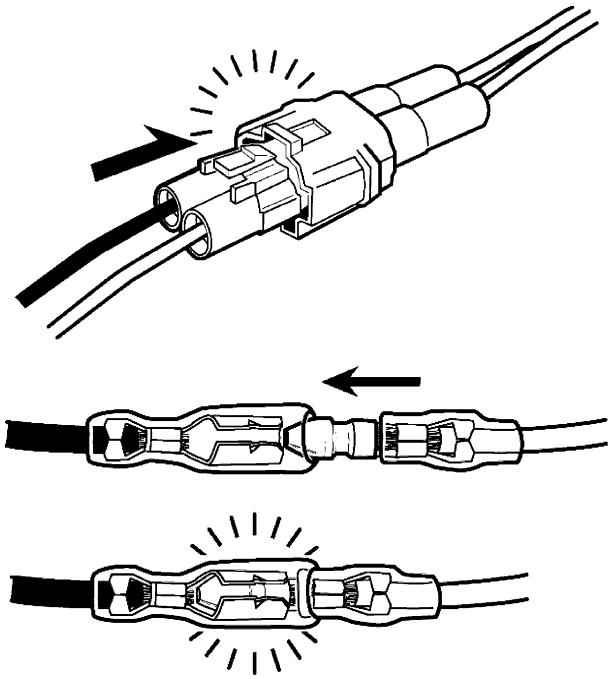

5. Check:
   - No continuity

Pocket tester
90890-03112
Analog pocket tester
YU-03112-C

TIP

- If there is no continuity, clean the terminals.
- When checking the wire harness, perform steps (1) to (4).
- As a quick remedy, use a contact revitalizer available at most part stores.

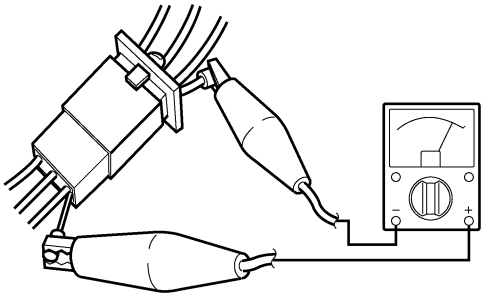

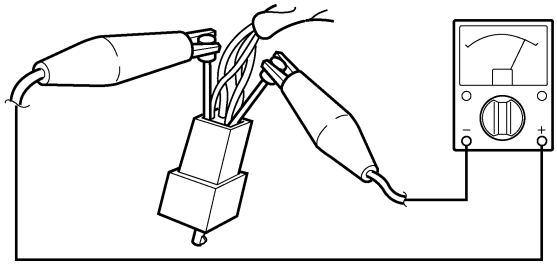

SPECIAL TOOLS

The following special tools are required for accurate and complete adjustment and assembly. Using the correct special tool will help prevent damage caused by the use of improper tools or improvised techniques. The shape and tool number used for the special tool differ by country, so two types are provided. Refer to the list provided to avoid errors when placing an order.

TIP

- For U.S.A. and Canada, use tool number starting with “YM-”, “YU-”, or “ACC-”.
- For others, use tool number starting with “90890-”.

Tool name/Part number	How to use	Illustration
Dial gauge & stand set 90890-01252 Dial gauge set YU-03097-B	This tool is used to check parts for runout or bend.	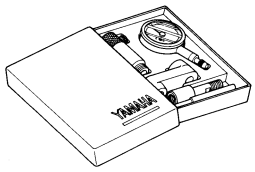
Crankshaft installer pot 90890-01274 Installing pot YU-90058	This tool is used to install the crankshaft.	90890-01274 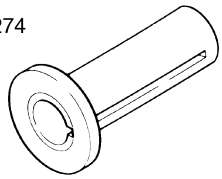 YU-90058/YU-90059 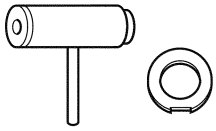
Crankshaft installer bolt 90890-01275 Bolt YU-90060	This tool is used to install the crankshaft.	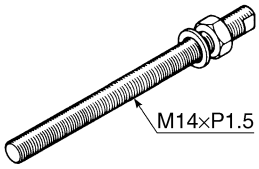
Adapter (M12) 90890-01278 Adapter #3 YU-90063	This tool is used to install the crankshaft.	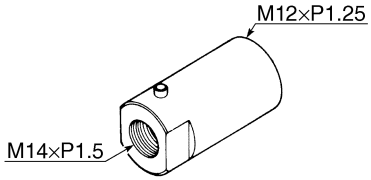
Piston pin puller set 90890-01304 Piston pin puller YU-01304	This tool is used to remove the piston pin.	90890-01304 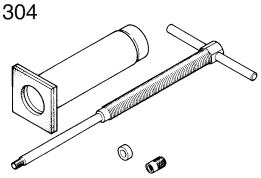 YU-01304 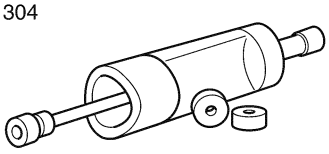

Tool name/Part number	How to use	Illustration
Radiator cap tester 90890-01325 Mityvac cooling system tester kit YU-24460-A	This tool is used to check the radiator and the radiator cap.	90890-01325 ø38 YU-24460-A
Radiator cap tester adapter 90890-01352 Pressure tester adapter YU-33984	This tool is used to check the radiator and the radiator cap.	90890-01352 ø31.4 ø38 ø41 ø28 YU-33984
Steering nut wrench 90890-01403 Exhaust flange nut wrench YU-A9472	This tool is used to remove or tighten the steering nut.	R20
Cap bolt wrench 90890-01500 Cap bolt wrench YM-01500	This tool is used to remove or tighten the base valve.	
Cap bolt ring wrench 90890-01501 Cap bolt ring wrench YM-01501	This tool is used to loosen or tighten the damper assembly.	
Fork seal driver 90890-01502 Fork seal driver (48) YM-A0948	This tool is used to install the oil seal of the front fork.	
Spoke nipple wrench (6–7) 90890-01521 Spoke nipple wrench (6–7) YM-01521	This tool is used to tighten the spoke.	

Tool name/Part number	How to use	Illustration
Pocket tester 90890-03112 Analog pocket tester YU-03112-C	This tool is used to measure the voltage, current, and resistance of electrical components.	
Timing light 90890-03141 Timing light YU-03141	This tool is used to measure the ignition timing.	
Pressure gauge 90890-03153 Pressure gauge YU-03153	This tool is used to measure the fuel pressure.	
Fuel pressure adapter 90890-03186 Fuel pressure adapter YM-03186	This tool is used to mount the pressure gauge.	
Test harness S– pressure sensor (3P) 90890-03207 Test harness S– pressure sensor (3P) YU-03207	This tool is used to check the throttle position sensor input voltage.	
Test harness– lean angle sensor (6P) 90890-03209 Test harness– lean angle sensor (6P)	This tool is used to check the lean angle sensor output voltage.	
FI diagnostic tool sub–lead 90890-03212 FI diagnostic tool sub–lead YU-03212	This tool is used to connect the Yamaha diagnostic tool to a battery.	
Test harness– speed sensor 5TJ (3P) 90890-03228 Test harness– speed sensor 5TJ (3P) YU-03228	This tool is used to check the speed sensor output voltage.	
Yamaha diagnostic tool 90890-03231 Yamaha diagnostic tool (US) 90890-03234	This tool is used to check error codes or carry out self-diagnosis.	

Tool name/Part number	How to use	Illustration
Valve spring compressor 90890-04019 Valve spring compressor YM-04019	This tool is used to disconnect or connect the valve and the valve spring.	90890-04019 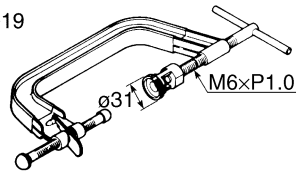 YM-04019 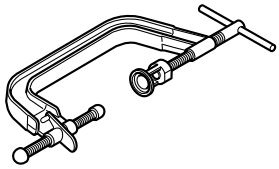
Spacer (crankshaft installer) 90890-04081 Pot spacer YM-91044	This tool is used to install the crankshaft.	90890-04081 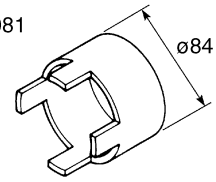 YM-91044 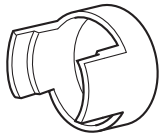
Universal clutch holder 90890-04086 Universal clutch holder YM-91042	This tool is used to hold the clutch when removing or installing the clutch boss securing nut.	90890-04086 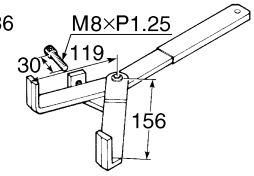 YM-91042 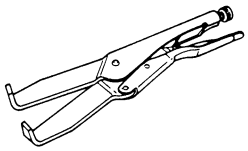
Valve guide remover (ø5) 90890-04097 Valve guide remover (5.0 mm) YM-04097	This tool is used to replace the valve guide.	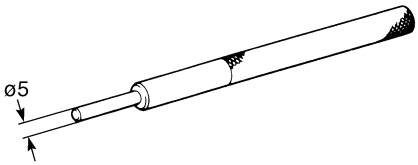
Valve guide installer (ø5) 90890-04098 Valve guide installer (5.0 mm) YM-04098	This tool is used to replace the valve guide.	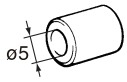
Valve guide reamer (ø5) 90890-04099 Valve guide reamer (5.0 mm) YM-04099	This tool is used to replace the valve guide.	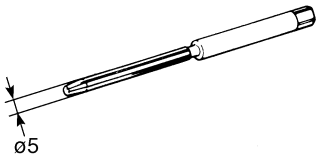

Tool name/Part number	How to use	Illustration
Valve lapper 90890-04101 Valve lapping tool YM-A8998	This tool is used to remove the valve lifter or lap the valve.	
Valve spring compressor attachment 90890-04108 Valve spring compressor adapter 22 mm YM-04108	This tool is used to disconnect or connect the valve and the valve spring.	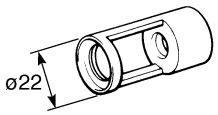
Valve guide remover (ø4.5) 90890-04116 Valve guide remover (4.5 mm) YM-04116	This tool is used to replace the valve guide.	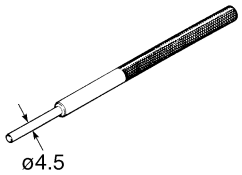
Valve guide installer (ø4.5) 90890-04117 Valve guide installer (4.5 mm) YM-04117	This tool is used to replace the valve guide.	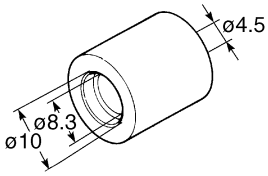
Valve guide reamer (ø4.5) 90890-04118 Valve guide reamer (4.5 mm) YM-04118	This tool is used to replace the valve guide.	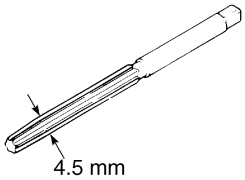
Rotor puller 90890-04142 Rotor puller YM-04142	This tool is used to remove the rotor.	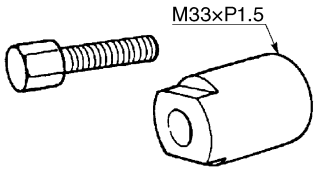
Crankcase separating tool 90890-04152 Crankcase separating tool YU-A9642	This tool is used to remove the crankshaft.	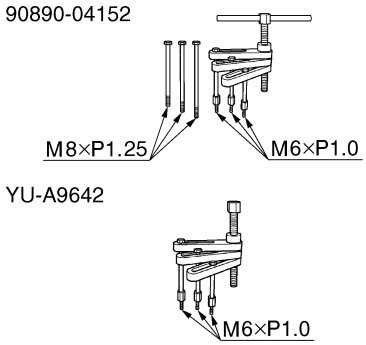
Ignition checker 90890-06754 Oppama pet–4000 spark checker YM-34487	This tool is used to check the spark performance of the ignition coil.	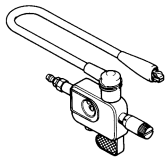

Tool name/Part number	How to use	Illustration
Digital tachometer 90890-06760 Digital tachometer YU-39951-B	This tool is used to measure the engine speed.	
Yamaha bond No. 1215 90890-85505 (Three bond No.1215®)	This sealant (Bond) is used for crankcase mating surface, etc.	

CONTROL FUNCTIONS

INDICATOR LIGHTS AND WARNING LIGHTS

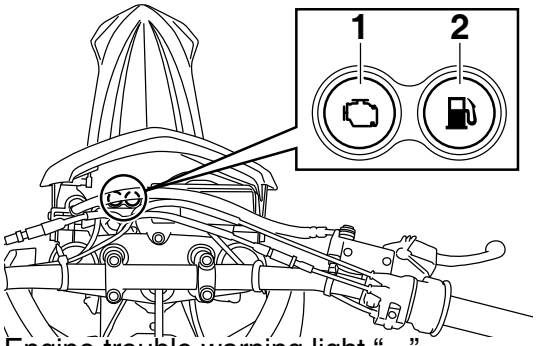

1. Engine trouble warning light "⚙"
2. Fuel level warning light "⛽"

Fuel level warning light "⛽"

This warning light comes on when the fuel level drops below approximately 1.6 L (0.42 US gal, 0.35 Imp.gal). When this occurs, refuel as soon as possible.

The electrical circuit of the warning light can be checked by pushing the start switch. The warning light should come on for a few seconds, and then go off.

If the warning light does not come on initially when the start switch is pushed, or if the warning light remains on, have a Yamaha dealer check the electrical circuit.

Engine trouble warning light "⚙"

This warning light comes on or flashes if a problem is detected in the electrical circuit monitoring the engine. If this occurs, have a Yamaha dealer check the vehicle.

The electrical circuit of the warning light can be checked by pushing the start switch. The warning light should come on for a few seconds, and then go off.

If the warning light does not come on initially when the start switch is pushed, or if the warning light remains on, have a Yamaha dealer check the electrical circuit.

ENGINE STOP SWITCH

The engine stop switch "1" is located on the left handlebar. Continue pushing the engine stop switch till the engine comes to a stop.

After the engine stops, the multi-function display will go off and the power supply to the ECU (Electronic Control Unit) will be cut off if the engine stop switch is pushed and held.

TIP

The multi-function display will go off after one minute if the engine stop switch is not pushed.

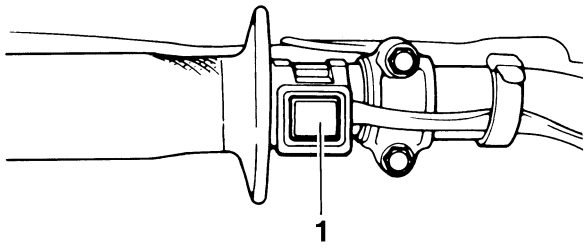

START SWITCH

The start switch "1" is located on the right handlebar. Push this switch to crank the engine with the starter.

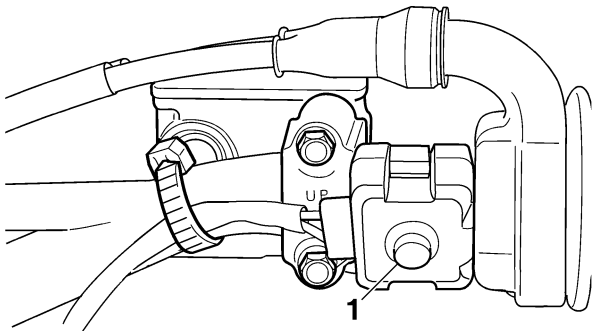

CLUTCH LEVER

The clutch lever "1" is located on the left handlebar. The clutch lever disengages or engages the clutch.

Pull the clutch lever toward the handlebar to disengage the clutch, and release the lever to engage the clutch.

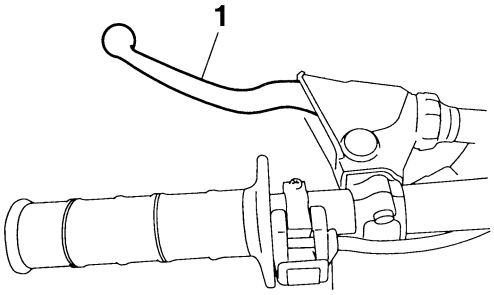

SHIFT PEDAL

The shift pedal “1” has adopted a method of 1 down & 5 ups (press-down & kick-ups).
Press it down for N (neutral) to 1st, and kick it up for 2nd to 6th.

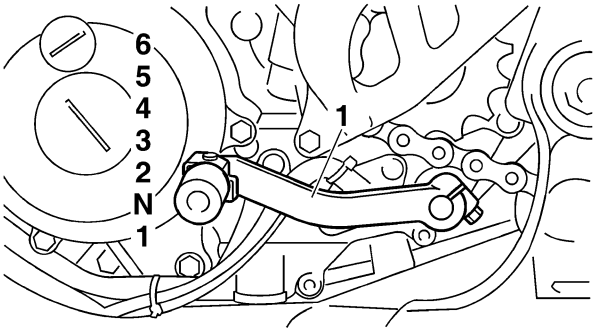

Recommended shift points

The recommended shift points during acceleration and deceleration are shown in the table below.

Shift up points
- **1st → 2nd: 20 km/h (12 mi/h)**
- **2nd → 3rd: 30 km/h (19 mi/h)**
- **3rd → 4th: 40 km/h (25 mi/h)**
- **4th → 5th: 50 km/h (31 mi/h)**
- **5th → 6th: 60 km/h (37 mi/h)**

Shift down points
- **6th → 5th: 45 km/h (28 mi/h)**
- **5th → 4th: 35 km/h (22 mi/h)**
- **4th → 3rd: 25 km/h (16 mi/h)**
- **3rd → 2nd: 25 km/h (16 mi/h)**
- **2nd → 1st: 25 km/h (16 mi/h)**

KICKSTARTER LEVER

The kickstarter lever “1” is in the right of the chassis.
To start the engine, pull out and push down the kickstarter lever with your foot.

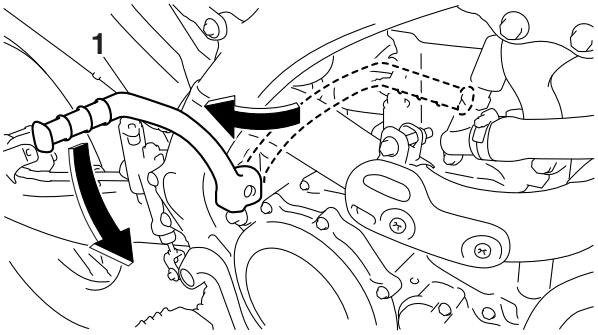

THROTTLE GRIP

The throttle grip “1” is located on the right handlebar. The throttle grip accelerates or decelerates the engine. For acceleration, turn the grip toward you; for deceleration, turn it away from you.

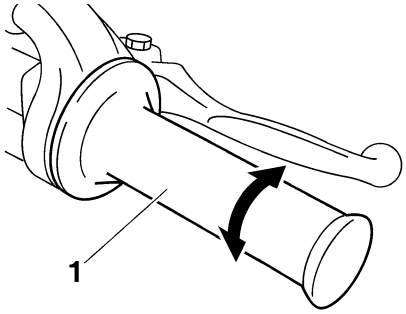

FRONT BRAKE LEVER

The front brake lever “1” is located on the right handlebar. Pull it toward the handlebar to activate the front brake.

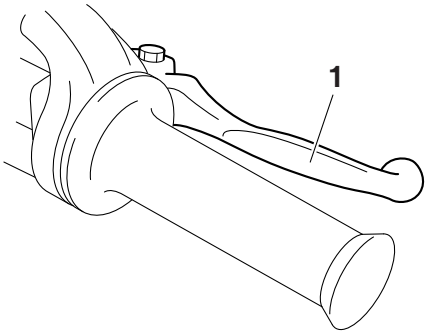

REAR BRAKE PEDAL

The rear brake pedal “1” is in the right of the chassis. Press down on the brake pedal to activate the rear brake.

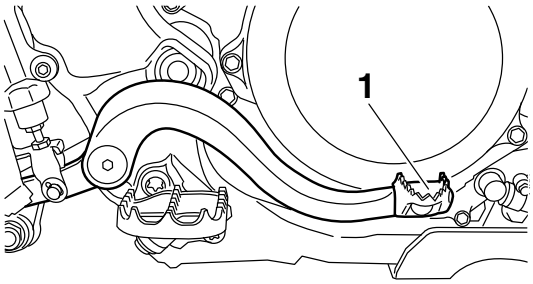

SIDESTAND

This sidestand “1” is used to support only the machine when standing or transporting it.

WARNING

- **Never apply additional force to the sidestand.**
- **Hold up the sidestand before starting out.**

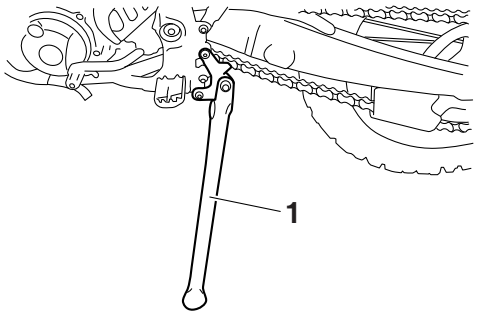

STARTER KNOB/IDLE ADJUSTING SCREW

Starting a cold engine requires a larger amount of intake air, which is supplied by the starter knob/idle screw “1”.

Pulling the knob toward “a” turns ON the starter, resulting in a larger amount of intake air. Pushing the knob toward “b” turns OFF the starter.

WARNING

While handling the starter knob/idle screw, take care not to burn yourself on exhaust pipes.

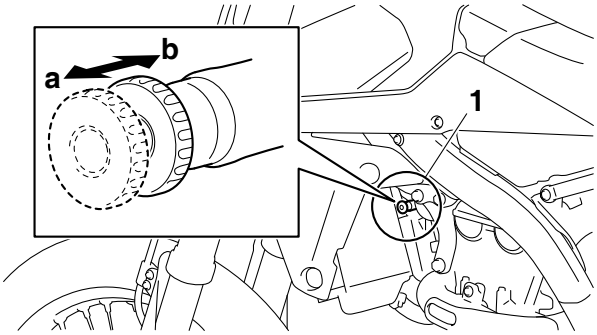

FUEL TANK CAP

Fuel tank cap “1” is located under the fuel tank cap cover “2”.

Remove the fuel tank cap cover to open the fuel tank cap.

TIP

- To remove the fuel tank cap cover, insert fingers under part “a”, and then use both hands to lift it up towards the rear of the vehicle.
- Install the fuel tank cap cover after placing the bands “3” all the way in under the seat.

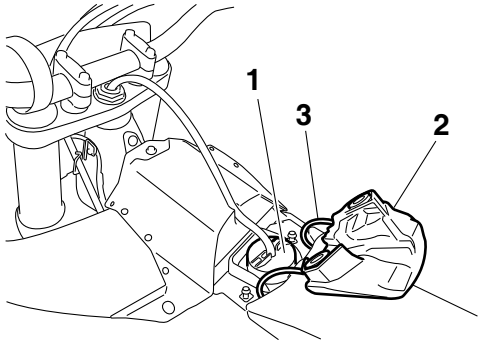

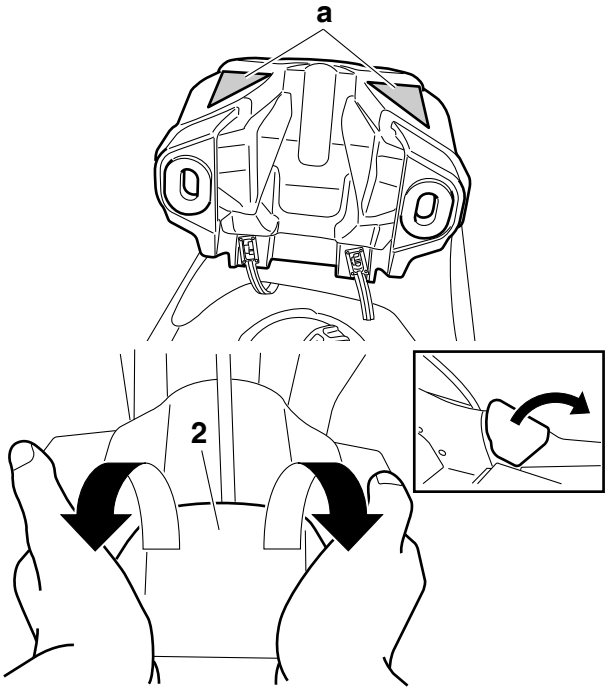

MULTI-FUNCTION DISPLAY

WARNING

Be sure to stop the machine before making any setting changes to the multi-function display.

The multi-function display is equipped with the following:
BASIC MODE:
- Speedometer
- Clock
- Two tripmeters (which shows the distance that has been traveled since it was last set to zero)

RACE MODE:
- Timer (which shows the time that has been accumulated since the start of timer measurement)
- Tripmeter (which shows the accumulated travel distance in timer measurement)
- Change tripmeter digits (capable of change to any given ones)

DESCRIPTION

Operation buttons:
1. Select button “SLCT 1”
2. Select button “SLCT 2”
3. Reset button “RST”

Screen display:
4. Tripmeter indicator A
5. Tripmeter indicator B
6. Timer indicator T
7. Clock/Timer
8. Speedometer
9. Odometer/Tripmeter

TIP

The operation buttons can be pushed in the following two manners:
Short push: Push the button. (⟹)
Long push: Push the button for 2 seconds or more. (➡)

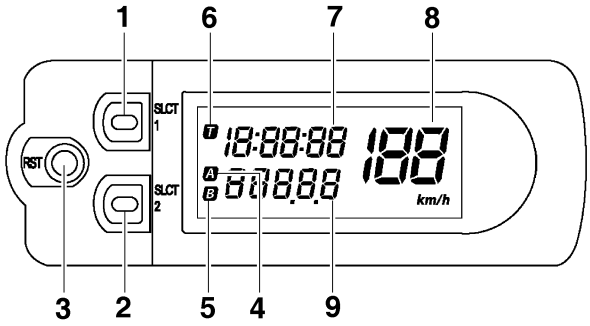

BASIC MODE

Changing speedometer display (for U.K.)
1. Push the "SLCT2" button for 2 seconds or more to change the speedometer units. The speedometer display will change in the following order:
   MPH → km/h → MPH.

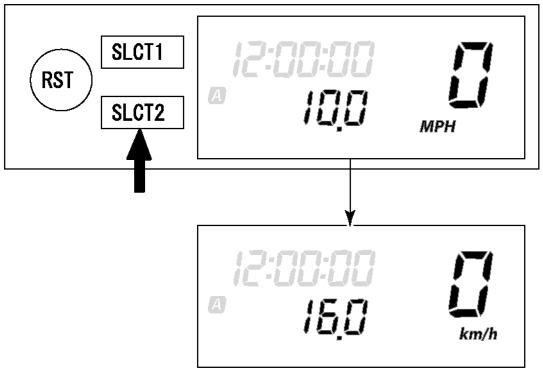

Setting the time
1. Push the “SLCT1” button for 2 seconds or more to enter the time setting mode.
2. Push the “RST” button to change the display for time indication. The display will change in the following order:
   Hour→Minute→Second→Hour.

TIP

The digits capable of setting go on flashing.

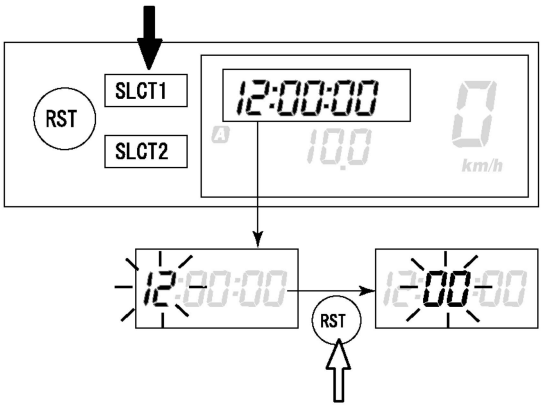

3. Push the “SLCT1” button (plus) or “SLCT2” button (minus) and change the time. A long push on the button will fast-forward the time.

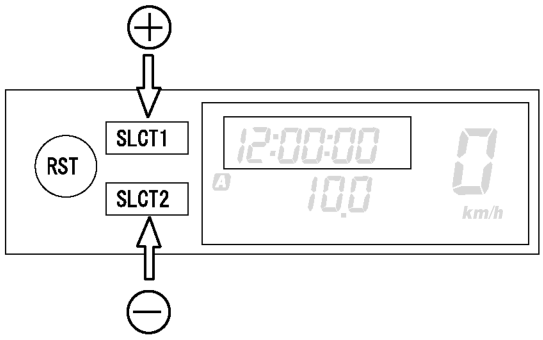

4. To end the setting, push the “RST” button for 2 seconds or more.

TIP

- In a 30-second absence of button operation, the setting will come to an end with the indicated time.
- To reset the seconds, push the “SLCT1” button or “SLCT2” button.

Changing odometer and tripmeter A/B (TRIP A/B)

1. Push the “SLCT2” button to change the tripmeter display. The display will change in the following order:
   Odometer→TRIP A→TRIP B→TRIP A→ Odometer.

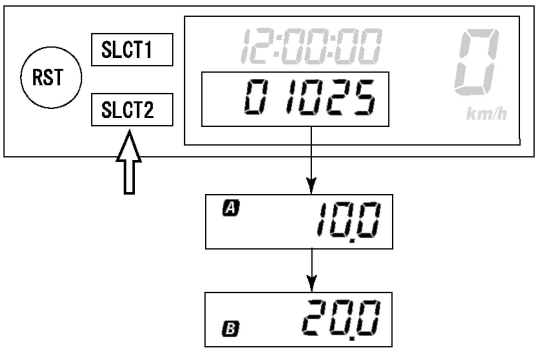

TIP

To reset the digits, select the tripmeter involved and push the “RST” button for 2 seconds or more.

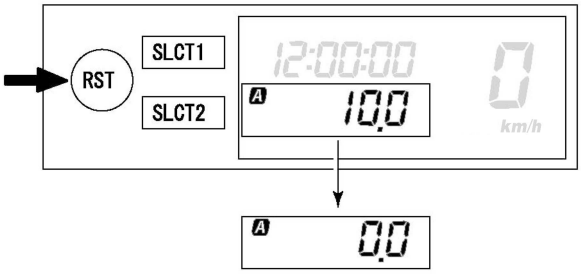

CHANGEOVER TO BASIC MODE/RACE MODE

TIP

- Measurement using the timer function can be made in RACE MODE.
- Indicator T will light up as an identifier that shows RACE MODE has been selected.
- RACE MODE cannot display the functions as in BASIC MODE.
- Changeover to RACE MODE forces the digits for tripmeter A (TRIP A) in BASIC MODE to be reset.

Changeover from BASIC MODE to RACE MODE

1. Push the “SLCT1” button and “SLCT2” button for 2 seconds or more at the same time to change over to RACE MODE.

TIP

Changeover to RACE MODE will put manual start measurement on standby causing T and A to flash. (For manual start, refer to “Putting measurement on standby” in “RACE MODE”.)

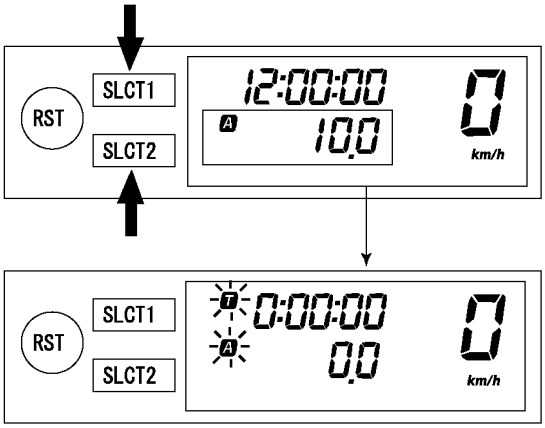

Returning to BASIC MODE from RACE MODE

TIP

It is possible to return to BASIC MODE with timer measurement at a stop.

1. Check that the timer is not in operation. If the timer is in operation, stop the timer by pushing the “SLCT1” button and “SLCT2” button at the same time.

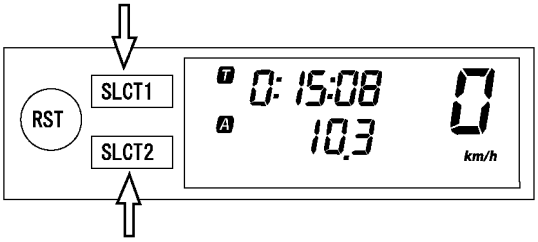

2. Push the “SLCT1” button and “SLCT2” button for 2 seconds or more at the same time to change over to BASIC MODE.

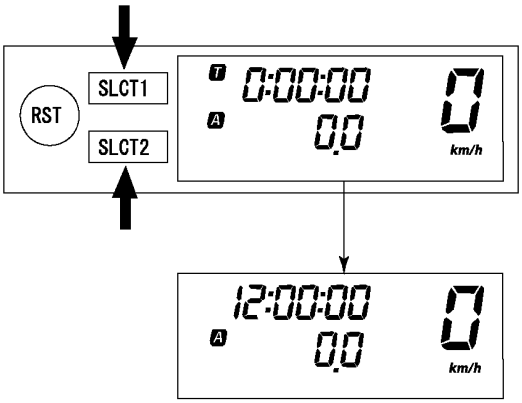

RACE MODE

Putting measurement on standby

TIP

Starting measurement consists of the following two starts, either of which can be selected.

- Manual start
  Starting measurement by the rider himself operating the button. (A long push on the “SLCT2” button will put measurement on standby.)
- Auto start
  Starting timer measurement automatically on detection of the movement of the machine. (A long push on the “SLCT1” button will put measurement on standby.)

Manual start

TIP

Initial setting at changeover to RACE MODE will remain for manual start.

1. Check that changeover to RACE MODE has been made. (Refer to “Changeover from BASIC MODE to RACE MODE”.)

TIP

When the machine is made ready for a run by manual start, T and A will start flashing.

2. Start timer measurement by pushing the “RST” button.

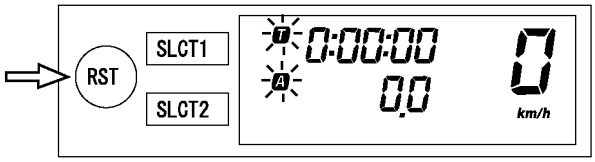

3. When stopping timer measurement, pushing the “SLCT1” button and “SLCT2” button at the same time.

TIP

If the machine is run while timer measurement is not made, no change will occur to the digit in tripmeter A (TRIP A).

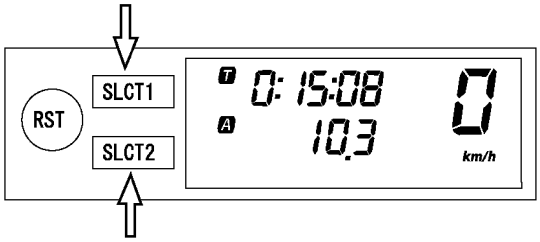

4. To resume the measurement, again push the “SLCT1” button and “SLCT2” button at the same time.

Auto start

1. Check that changeover has been made to RACE MODE. (Refer to “Changeover from BASIC MODE to RACE MODE”.)
2. Make the machine ready for a run by pushing the “SLCT1” button for 2 seconds or more.

TIP

When the measurement is made ready for a run by auto start, T and A will start flashing. Timer display will turn on scrolling from left to right.

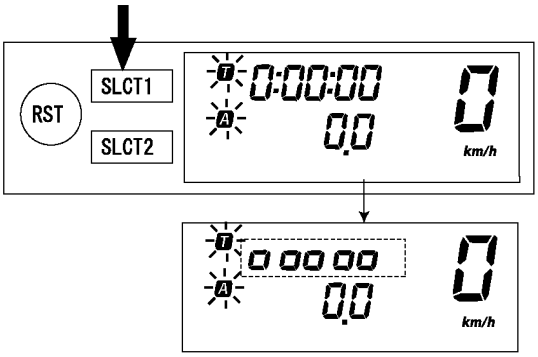

3. Run the machine and start timer measurement.
4. To stop timer measurement, pushing the “SLCT1” button and “SLCT2” button at the same time.

TIP

If the machine is run while timer measurement is not made, no change will occur to the digit in tripmeter A (TRIP A).

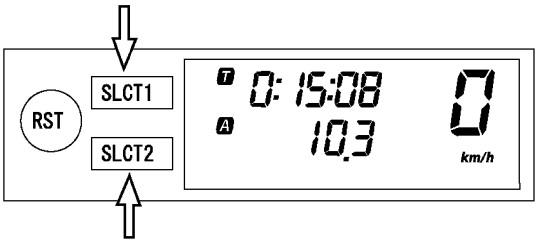

5. To resume the measurement, again pushing the “SLCT1” button and “SLCT2” button at the same time.

Resetting measurement data

TIP

Resetting can be made in the following two manners.
Resetting is possible while timer measurement is made:
• Reset tripmeter A.
Resetting is possible while timer measurement is not made:
• Reset tripmeter A and timer.

Resetting tripmeter A (TRIP A)

1. Check that the timer is in operation. If the timer is not in operation, start the timer by pushing the “SLCT1” button and “SLCT2” button at the same time.
2. Reset tripmeter A (TRIP A) display by pushing the “RST” button for 2 seconds or more.

TIP

If reset, A and travel distance display will go on flashing for four seconds.

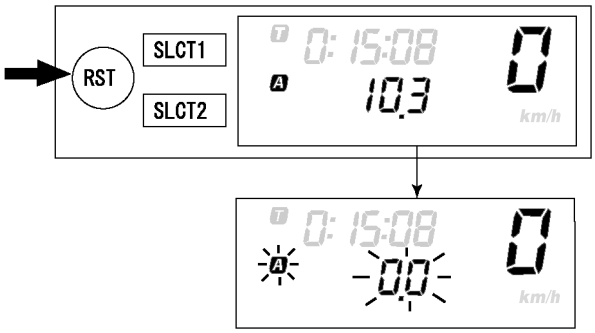

Resetting tripmeter A (TRIP A) and timer

1. Check that the timer is not in operation. If the timer is in operation, stop it by pushing the “SLCT1” button and “SLCT2” button at the same time.
2. Reset all measured data by pushing the “RST” button for 2 seconds or more.

TIP

• Resetting will reset the timer display and travel distance display and put measurement on standby.
• Auto start attempt will put measurement on standby as such. Likewise, manual start attempt will put measurement on standby as such.

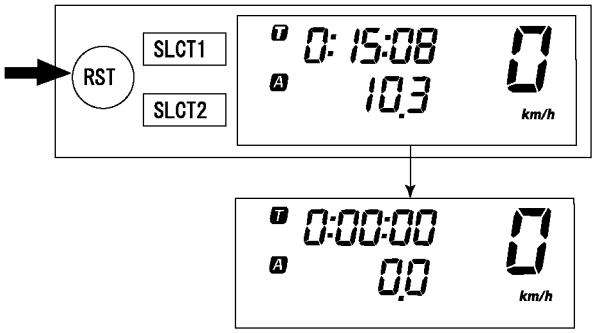

Correcting tripmeter A (TRIP A)

1. Change the travel distance display by pushing the “SLCT1” button (plus) or “SLCT2” button (minus). A long push on the button will fast-forward the change.

TIP

Change can be made any time while timer measurement is or is not being made.

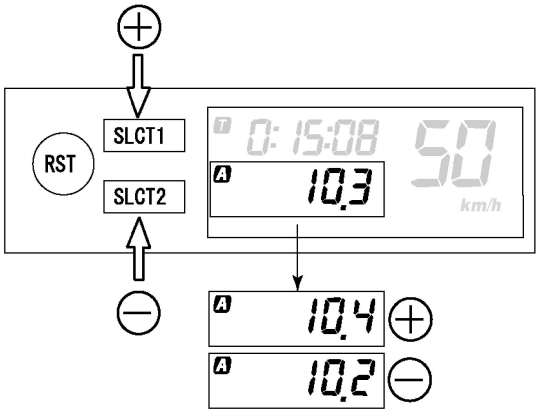

FUNCTION DIAGRAM

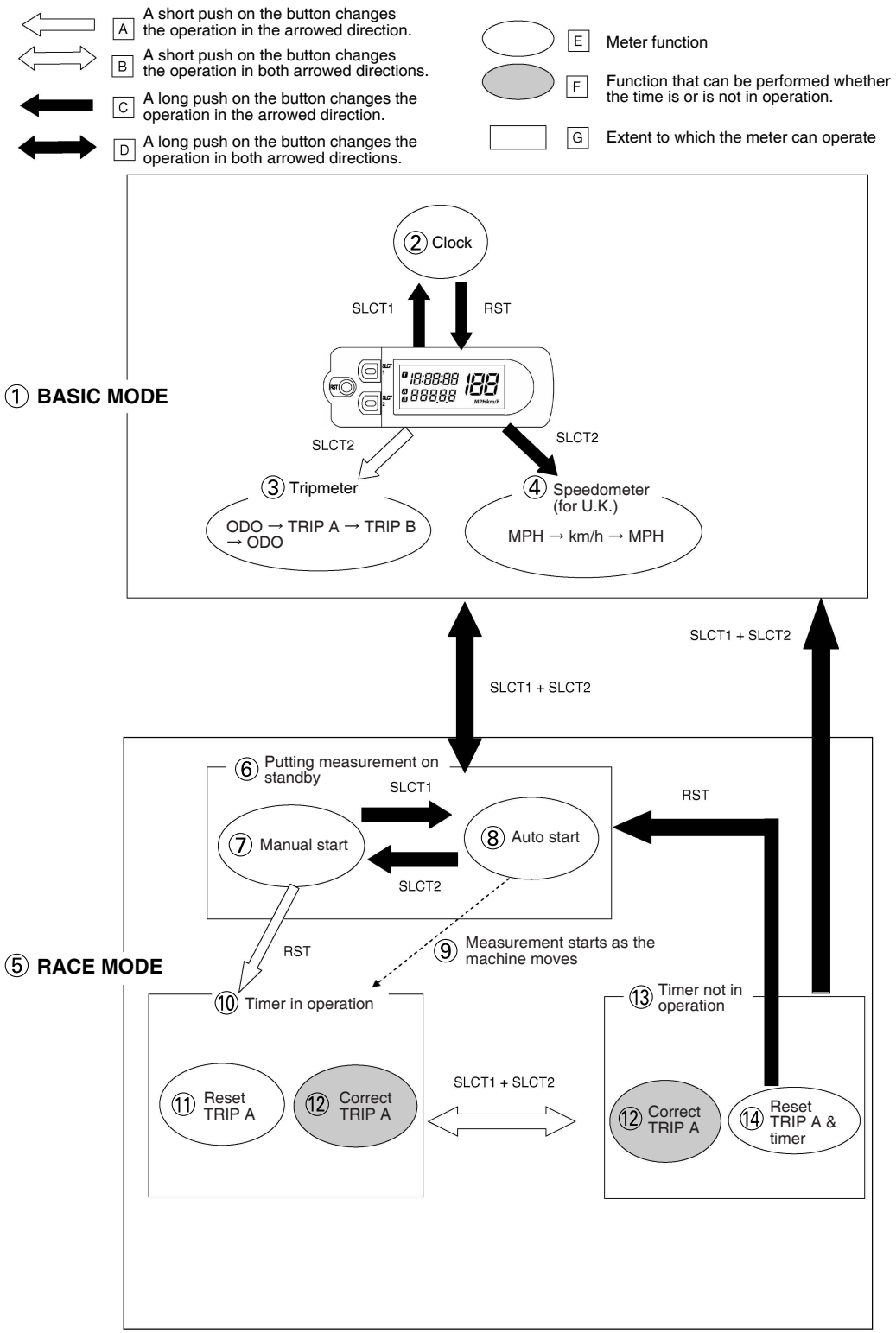

TIP

The following diagram illustrates the multi-function display regarding the direction and operation condition involved in each of its functions.

A.A short push on the button changes the operation in the arrowed direction.
B.A short push on the button changes the operation in both arrowed directions.
C.A long push on the button changes the operation in the arrowed direction.
D.A long push on the button changes the operation in both arrowed directions.
E.Meter function
F.Function that can be performed whether the time is or is not in operation.
G.Extent to which the meter can operate
1. BASIC MODE
2. Clock
3. Trip meter
4. Speedometer (for U.K.)
5. RACE MODE
6. Putting measurement on standby
7. Manual start
8. Auto start
9. Measurement starts as the machine moves
10.Timer in operation
11.Reset TRIP A
12.Correct TRIP A
13.Timer not in operation
14.Reset TRIP A and timer

STARTING AND BREAK-IN

FUEL

Always use the recommended fuel as stated below. Also, be sure to use new gasoline the day of a race.

Recommended fuel
Premium unleaded gasoline
Fuel tank capacity
7.5 L (1.98 US gal, 1.65 Imp.gal)
Fuel reserve amount
1.6 L (0.42 US gal, 0.35 Imp.gal)

NOTICE

Use only unleaded gasoline. The use of leaded gasoline will cause severe damage to the engine internal parts such as valves, piston rings, and exhaust system, etc.

TIP

Your Yamaha engine has been designed to use premium unleaded gasoline with a pump octane number [(R+M)/2] of 91 or higher, or a research octane number of 95 or higher. If knocking (or pinging) occurs, use a gasoline of a different brand.

WARNING

- **For refueling, be sure to stop the engine and use enough care not to spill any fuel. Also be sure to avoid refueling close to a fire.**
- **Refuel after the engine, exhaust pipe, etc. have cooled off.**

Gasohol (For USA and Canada)

There are two types of gasohol: gasohol containing ethanol and that containing methanol. Gasohol containing ethanol can be used if the ethanol content does not exceed 10%. Gasohol containing methanol is not recommended by Yamaha because it can cause damage to the fuel system or vehicle performance problems.

HANDLING NOTE

WARNING

Never start or run the engine in a closed area. The exhaust fumes are poisonous; they can cause loss of consciousness and death in a very short time. Always operate the machine in a well-ventilated area.

NOTICE

- **Unlike a two-stroke engine, this engine cannot be kick started when the throttle is open because the kickstarter may kick back. Also, if the throttle is open the air/fuel mixture may be too lean for the engine to start.**
- **Before starting the machine, perform the checks in the pre-operation check list.**

AIR FILTER MAINTENANCE

According to “CLEANING THE AIR FILTER ELEMENT” section in the CHAPTER 3, apply the foam-air-filter oil or its equivalent to the element. (Excess oil in the element may adversely affect engine starting.)

STARTING A COLD ENGINE

NOTICE

For maximum engine life, never accelerate hard when the engine is cold!

In order for the ignition circuit cut-off system to enable starting, one of the following conditions must be met:

- The transmission is in the neutral position.
- The transmission is in gear with the clutch lever pulled.

1. Pull the starter knob/idle screw “1” to its full length.

TIP

When the ambient temperature is 15°C (59°F) or below, use the starter knob/idle screw.

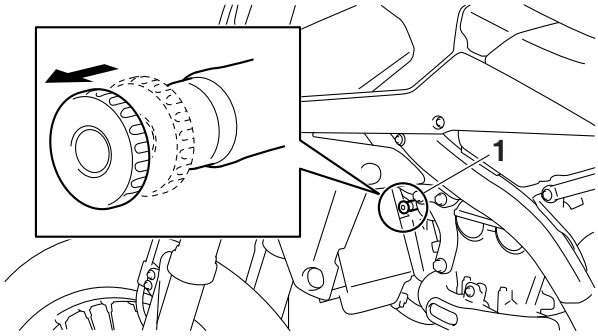

2. Completely close the throttle.
3. Start the engine by pushing the start switch. If the engine fails to start when using the start switch, release it, wait a few seconds, and then try again.
   Each starting attempt should be as short as possible to preserve the battery. Do not crank the engine more than 10 seconds on any one attempt. If the engine does not start with the starter motor, try using the kickstarter.

NOTICE

If the starter motor will not turn when the start switch is pushed, stop pushing it immediately in order to avoid placing extra load on the starter motor, and start the engine by using the kickstarter.

TIP

If the engine fails to start, push the engine stop switch and give the kickstarter 10 to 20 slow kicks at full throttle in order to clear the engine of the rich air-fuel mixture retained in it.

4. When the engine starts running, warm this up one or two minutes at a steady speed (of 3000 to 5000 r/min), and then return the starter knob/idle screw to its original position.

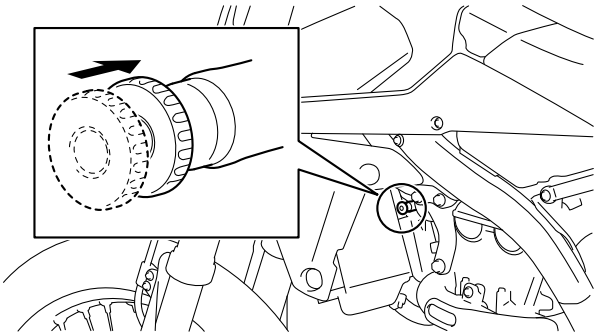

WARNING

Since exhaust gas contains harmful ingredients, do not start or warm it up at an ill-ventilated place or a closed narrow place.

5. To stop the engine, push the engine stop switch “1”.

TIP

Continue pushing the engine stop switch till the engine comes to a full stop.

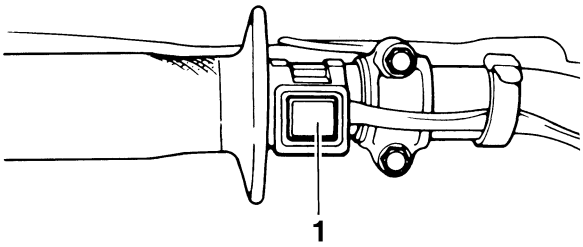

Starting with the kickstarter

When using the kickstarter to start the engine, follow the procedures as described below.

1. Fold out the kickstarter lever, push it down lightly with your foot until resistance is felt.

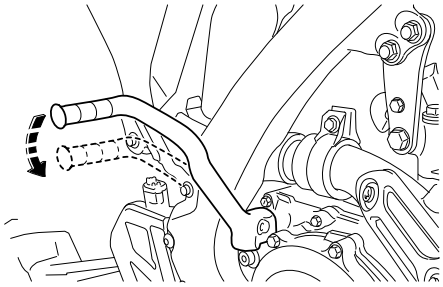

2. With the throttle fully closed,push the kickstarter down lightly until the gears engage, and then push it down smoothly but forcefully.

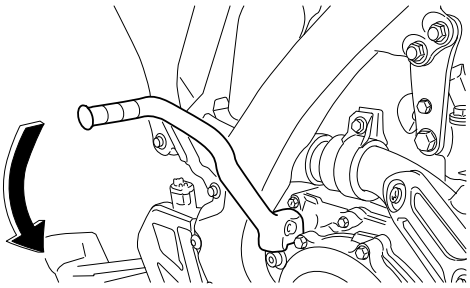

WARNING

Do not open the throttle while kicking the kickstarter lever. Otherwise, the kickstarter lever may kick back.

TIP

If the engine fails to start, push the engine stop switch and give the kickstarter 10 to 20 slow kicks at full throttle in order to clear the engine of the rich air-fuel mixture retained in it.

STARTING A WARM ENGINE

Follow the same procedure as for starting a cold engine with the exception that the starter is not required when the engine is warm.

TIP

If it fails to start, fully open the throttle grip and give 10 to 20 slow kicks to clear the engine of the rich air-fuel mixture retained in it.

BREAK-IN PROCEDURES

A break-in is important so that rotating portion, sliding surfaces, and mounted areas may fit one another, and that the rider may become accustomed to the machine.

NOTICE

Before running, do maintenance on the air filter element.
Refer to "CLEANING THE AIR FILTER ELEMENT" on page 3-14.

1. After warming up the engine, drive it for about 20 minutes at a throttle opening of 1/2 or less.
2. Make a pit stop, and check mounted areas for looseness, oil leaks, or other problems.
3. Then, drive it for about 40 minutes at a throttle opening of 3/4 or less.
4. Make a pit stop again, and thoroughly check mounted areas for looseness, oil leaks, or other problems. Thorough checks and adjustments are required in particular for stretch of cables, free play of the brake, stretch of the drive chain, looseness of the spoke, and so on.

NOTICE

After a break-in or after each race, always check the points shown in "TORQUE-CHECK POINTS" for tightening torques and retighten them. (Refer to "TORQUE-CHECK POINTS" on page 1-36.)
Also when the following parts are replaced, a break-in is required.

- **Cylinder and Crankshaft: A break-in is required for about an hour.**
- **Piston, Piston ring, Valve, Camshaft, and Gear: A break-in is required for about 30 minutes at a throttle opening of 1/2 or less.**

Observe the condition of the engine carefully during a break-in.
For checkpoints for a break-in, see "MAINTENANCE AFTER BREAK-IN". If any problem is found, immediately stop the engine and make a checkup.

MAINTENANCE AFTER BREAK-IN

After a break-in, perform careful maintenance to get ready for the next practice or race. Refer to “PRE-OPERATION INSPECTION AND MAINTENANCE” on page 3-9.

MAJOR MAINTENANCE

1. For the engine
   - Leaks around the engine
     Check for pressure leaks from the cylinder head or the cylinder, oil leaks from the crankcase or the case cover, leaks from the coolant system, and other leaks.
   - Check that the valve, the cylinder head, the cylinder, the piston, and the piston ring fit one another, and that contact between the valve and the cylinder head, and that between the cylinder and the piston are correct.
   - Engine oil change
     Drain the oil, and check for dirt and foreign materials such as metal chips. (If any foreign material is mixed, disassemble and check the crankcase.)
     Pour the specified amount of the recommended oil.
   - AC magneto
     Check for looseness in mounted areas of the rotor and the stator.
     Check that the connector is not being disconnected.
   - Silencer
     Check the main body and stay for cracks.
     Check for leaks.
   - Mounting bolts and nuts
     Check for looseness in mounted areas of parts, as well as engine mounting bolts and engine brackets.
2. For the chassis
   - Check welds and mounted areas of the frame, the swingarm, the link, the bracket, and so on, for looseness and cracks.
   - Wheel (s)
     Check the wheel for runout. Check the spoke for looseness.
   - Brake(s)
     Check the brake disc mounting bolt for looseness.
     Check that the reservoir contains the specified amount of brake fluid. Check for leaks.
   - Cable
     Grease and adjust cables.
   - Drive chain
     Lubricate the drive chain and adjust its tension.
   - Fuel tank
     Clean the inside of the fuel tank. Check for leaks.
   - Suspension
     Check for oil leaks in the front fork or the rear shock absorber. Check that the mounted conditions are good.
   - Sprocket
     Check for looseness in the sprocket mounted on the rear wheel.
   - Mounting bolts and nuts
     Check mounted areas for looseness.

NOTICE

After a break-in or before each race, always check the points shown in “TORQUE-CHECK POINTS” for tightening torques and retighten them. (Refer to “TORQUE-CHECK POINTS” on page 1-36.)

- Greasing and oiling
  Always grease or oil the specified points.

TORQUE-CHECK POINTS

Frame construction				Frame to rear frame
				Frame to engine protector
		Combined seat and fuel tank		Fuel tank to frame
Engine mounting				Frame to engine
				Engine bracket to engine
				Engine bracket to frame
Seat				Seat to frame
Steering		Steering stem to handlebar		Steering stem to frame
				Steering stem to upper bracket
				Upper bracket to handlebar
Suspension	Front	Steering stem to front fork		Front fork to upper bracket
				Front fork to lower bracket
	Rear	Link		Assembly of links
				Link to frame
				Link to rear shock absorber
				Link to swingarm
		Mounting of rear shock absorber		Rear shock absorber and frame
		Mounting of swingarm		Tightening of pivot shaft
Wheel (s)		Mounting of wheel	Front	Tightening of wheel axle
				Tightening of axle holder
				Tightening of spoke nipple
			Rear	Tightening of wheel axle
				Wheel to rear wheel sprocket
				Tightening of spoke nipple
Brake(s)			Front	Brake caliper to front fork
				Brake disc to wheel
				Tightening of union bolt
				Brake master cylinder to handle-bar
				Tightening of bleed screw
				Tightening of brake hose holder
			Rear	Brake pedal to frame
				Brake disc to wheel
				Tightening of union bolt
				Brake master cylinder to frame
				Tightening of bleed screw
				Tightening of brake hose holder
Shift pedal				Shift pedal to shift shaft

Fuel system	Fuel pump to fuel tank
	Fuel sender to fuel tank
Plastic cover	Tightening of front fender
	Tightening of fork leg protector
	Tightening of air scoop
	Left cover to rear frame
	Tightening of side cover
	Tightening of rear fender
	Tightening of mud flap
	Tightening of rear brake disc cover
	Tightening of rear brake caliper cover

TIP

Concerning the tightening torque, refer to “TIGHTENING TORQUES” on page 2-13.

MOTORCYCLE CARE AND STORAGE

CARE

While the open design of a motorcycle reveals the attractiveness of the technology, it also makes it more vulnerable. Rust and corrosion can develop even if high-quality components are used. A rusty exhaust pipe may go unnoticed on a car, however, it detracts from the overall appearance of a motorcycle. Frequent and proper care does not only comply with the terms of the warranty, but it will also keep your motorcycle looking good, extend its life and optimize its performance.

Before cleaning

1. Cover the muffler outlet with a plastic bag after the engine has cooled down.
2. Make sure that all caps and covers as well as all electrical couplers and connectors, including the spark plug cap, are tightly installed.
3. Remove extremely stubborn dirt, like oil burnt onto the crankcase, with a degreasing agent and a brush, but never apply such products onto seals, gaskets, sprockets, the drive chain and wheel axles. Always rinse the dirt and degreaser off with water.

Cleaning

NOTICE

- **Avoid using strong acidic wheel cleaners, especially on spoked wheels. If such products are used on hard-to-remove dirt, do not leave the cleaner on the affected area any longer than instructed. Also, thoroughly rinse the area off with water, immediately dry it, and then apply a corrosion protection spray.**
- **Improper cleaning can damage plastic parts (such as cowlings, panels, windshields, headlight lenses, meter lenses, etc.) and the mufflers. Use only a soft, clean cloth or sponge with water to clean plastic. However, if the plastic parts cannot be thoroughly cleaned with water, diluted mild detergent with water may be used. Be sure to rinse off any detergent residue using plenty of water, as it is harmful to plastic parts.**
- **Do not use any harsh chemical products on plastic parts. Be sure to avoid using cloths or sponges which have been in contact with strong or abrasive cleaning products, solvent or thinner, fuel (gasoline), rust removers or inhibitors, brake fluid, antifreeze or electrolyte.**
- **Do not use high-pressure washers or steam-jet cleaners since they cause water seepage and deterioration in the following areas: seals (of wheel and swingarm bearings, fork and brakes), electric components (couplers, connectors, instruments, switches and lights), breather hoses and vents.**
- **For motorcycles equipped with a windshield: Do not use strong cleaners or hard sponges as they will cause dulling or scratching. Some cleaning compounds for plastic may leave scratches on the windshield. Test the product on a small hidden part of the windshield to make sure that it does not leave any marks. If the windshield is scratched, use a quality plastic polishing compound after washing.**

<u>After normal use</u>

Remove dirt with warm water, a mild detergent, and a soft, clean sponge, and then rinse thoroughly with clean water. Use a toothbrush or bottlebrush for hard-to-reach areas. Stubborn dirt and insects will come off more easily if the area is covered with a wet cloth for a few minutes before cleaning.

<u>After riding in the rain, near the sea or on salt-sprayed roads</u>

Since sea salt or salt sprayed on roads during winter are extremely corrosive in combination with water, carry out the following steps after each ride in the rain, near the sea or on salt-sprayed roads.

TIP

Salt sprayed on roads in the winter may remain well into spring.

1. Clean the motorcycle with cold water and a mild detergent, after the engine has cooled down.
   NOTICE: **Do not use warm water since it increases the corrosive action of the salt.**

2. Apply a corrosion protection spray on all metal, including chrome- and nickel-plated, surfaces to prevent corrosion.

After cleaning

1. Dry the motorcycle with a chamois or an absorbing cloth.
2. Immediately dry the drive chain and lubricate it to prevent it from rusting.
3. Use a chrome polish to shine chrome, aluminum and stainless- steel parts, including the exhaust system. (Even the thermally induced discoloring of stainless- steel exhaust systems can be removed through polishing.)
4. To prevent corrosion, it is recommended to apply a corrosion protection spray on all metal, including chrome- and nickel-plated, surfaces.
5. Use spray oil as a universal cleaner to remove any remaining dirt.
6. Touch up minor paint damage caused by stones, etc.
7. Wax all painted surfaces.
8. Let the motorcycle dry completely before storing or covering it.

⚠ WARNING

Contaminants on the brakes or tires can cause loss of control.

- **Make sure that there is no oil or wax on the brakes or tires.**
- **If necessary, clean the brake discs and brake linings with a regular brake disc cleaner or acetone, and wash the tires with warm water and a mild detergent. Before riding at higher speeds, test the motorcycle's braking performance and cornering behavior.**

NOTICE

- **Apply spray oil and wax sparingly and make sure to wipe off any excess.**
- **Never apply oil or wax to any rubber and plastic parts, but treat them with a suitable care product.**
- **Avoid using abrasive polishing compounds as they will wear away the paint.**

TIP

- Consult a Yamaha dealer for advice on what products to use.
- Washing, rainy weather or humid climates can cause the headlight lens to fog. Turning the headlight on for a short period of time will help remove the moisture from the lens.

STORAGE

Short-term

Always store your motorcycle in a cool, dry place and, if necessary, protect it against dust with a porous cover. Be sure the engine and the exhaust system are cool before covering the motorcycle.

NOTICE

- **Storing the motorcycle in a poorly ventilated room or covering it with a tarp, while it is still wet, will allow water and humidity to seep in and cause rust.**
- **To prevent corrosion, avoid damp cellars, stables (because of the presence of ammonia) and areas where strong chemicals are stored.**

Long-term

Before storing your motorcycle for several months:

1. Follow all the instructions in the "Care" section of this chapter.
2. Fill up the fuel tank and add fuel stabilizer (if available) to prevent the fuel tank from rusting and the fuel from deteriorating.
3. Perform the following steps to protect the cylinder, piston rings, etc. from corrosion.

▼▼▼▼▼▼▼▼▼▼▼▼▼▼▼▼▼▼▼▼▼▼▼▼▼▼▼▼▼▼▼▼▼▼

a. Remove the spark plug cap and spark plug.
b. Pour a teaspoonful of engine oil into the spark plug bore.
c. Install the spark plug cap onto the spark plug, and then place the spark plug on the cylinder head so that the electrodes are grounded. (This will limit sparking during the next step.)
d. Turn the engine over several times with the starter. (This will coat the cylinder wall with oil.)

e. Remove the spark plug cap from the spark plug, and then install the spark plug and the spark plug cap. **WARNING! To prevent damage or injury from sparking, make sure to ground the spark plug electrodes while turning the engine over.**

▲▲▲▲▲▲▲▲▲▲▲▲▲▲▲▲▲▲▲▲▲▲▲▲▲▲▲▲▲▲▲▲

4. Lubricate all control cables and the pivoting points of all levers and pedals as well as of the sidestand/ centerstand.
5. Check and, if necessary, correct the tire air pressure, and then lift the motorcycle so that both of its wheels are off the ground. Alternatively, turn the wheels a little every month in order to prevent the tires from becoming degraded in one spot.
6. Cover the muffler outlet with a plastic bag to prevent moisture from entering it.
7. Remove the battery and fully charge it. Store it in a cool, dry place and charge it once a month. Do not store the battery in an excessively cold or warm place [less than 0 °C (30 °F) or more than 30 °C (90 °F)]. For more information on storing the battery, See page 9-69.

TIP

Make any necessary repairs before storing the motorcycle.

SPECIFICATIONS

GENERAL SPECIFICATIONS

Model	
Model	2GB1 (USA) 2GB2 (CAN) 2GB3 (EUR) 2GB4 (AUS) (NZL) (ZAF)
Dimensions	
Overall length	2165 mm (85.2 in)
Overall width	825 mm (32.5 in)
Overall height	1280 mm (50.4 in)
Seat height	965 mm (38.0 in)
Wheelbase	1465 mm (57.7 in)
Ground clearance	325 mm (12.8 in)
Weight	
Curb weight	117 kg (258 lb) (USA) (CAN) 118 kg (260 lb) (EUR) (AUS) (NZL) (ZAF)

ENGINE SPECIFICATIONS

Engine	
Engine type	Liquid cooled 4-stroke, DOHC
Displacement	250 cm^3
Cylinder arrangement	Single cylinder
Bore × stroke	77.0 × 53.6 mm (3.0 × 2.1 in)
Compression ratio	13.5:1
Starting system	Electric starter and kickstarter
Fuel	
Recommended fuel	Premium unleaded gasoline only
Fuel tank capacity	7.5 L (1.98 US gal, 1.65 Imp.gal)
Fuel reserve amount	1.6 L (0.42 US gal, 0.35 Imp.gal)
Engine oil	
Lubrication system	Wet sump
Recommended brand	YAMALUBE
Type	SAE 10W-30, SAE 10W-40, SAE 10W-50, SAE 15W-40, SAE 20W-40 or SAE 20W-50
Recommended engine oil grade	API service SG type or higher, JASO standard MA
Engine oil quantity	
Quantity (disassembled)	1.10 L (1.16 US qt, 0.97 Imp.qt)
Without oil filter element replacement	0.83 L (0.88 US qt, 0.73 Imp.qt)
With oil filter element replacement	0.85 L (0.90 US qt, 0.75 Imp.qt)
Oil filter	
Oil filter type	Paper
Bypass valve opening pressure	40.0–80.0 kPa (0.40–0.80 kgf/cm^2, 5.8–11.6 psi)
Oil pump	
Oil pump type	Trochoid
Inner-rotor-to-outer-rotor-tip clearance	Less than 0.150 mm (0.0059 in)
Limit	0.20 mm (0.0079 in)
Outer-rotor-to-oil-pump-housing clearance	0.13–0.18 mm (0.0051–0.0071 in)
Limit	0.24 mm (0.0094 in)
Oil-pump-housing-to-inner-and-outer-rotor clearance	0.06–0.11 mm (0.0024–0.0043 in)
Limit	0.17 mm (0.0067 in)
Cooling system	
Radiator capacity (including all routes)	1.00 L (1.06 US qt, 0.88 Imp.qt)
Radiator capacity	0.56 L (0.60 US qt, 0.50 Imp.qt)
Radiator cap opening pressure	107.9–137.3 kPa (1.08–1.37 kg/cm^2, 15.6–19.9 psi)
Radiator core	
Width	112.6 mm (4.43 in)
Height	235.0 mm (9.25 in)
Depth	28.0 mm (1.10 in)
Water pump	
Water pump type	Single suction centrifugal pump
Spark plug	
Manufacturer/model	NGK/LMAR8G
Spark plug gap	0.7–0.8 mm (0.028–0.031 in)

Cylinder head	
Combustion chamber volume	12.07–12.87 cm^3 (0.74–0.79 cu.in)
Warpage limit	0.05 mm (0.0020 in)

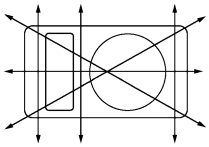

Camshaft	
Drive system	Chain drive (left)
Camshaft cap inside diameter	22.000–22.021 mm (0.8661–0.8670 in)
Camshaft journal diameter	21.959–21.972 mm (0.8645–0.8650 in)
Camshaft-journal-to-camshaft-cap clearance	0.028–0.062 mm (0.0011–0.0024 in)
Camshaft lobe dimensions	
Intake A	31.730–31.830 mm (1.2492–1.2531 in)
Limit	31.630 mm (1.2453 in)
Intake B	22.450–22.550 mm (0.8839–0.8878 in)
Limit	22.350 mm (0.8799 in)
Exhaust A	33.370–33.470 mm (1.3138–1.3177 in)
Limit	33.270 mm (1.3098 in)
Exhaust B	25.211–25.311 mm (0.9926–0.9965 in)
Limit	25.111 mm (0.9886 in)

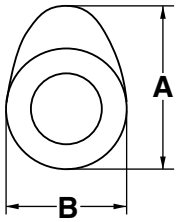

Camshaft runout limit	0.030 mm (0.0012 in)
Timing chain	
Tensioning system	Automatic
Valve, valve seat, valve guide	
Valve clearance (cold)	
Intake	0.12–0.19 mm (0.0047–0.0075 in)
Exhaust	0.17–0.24 mm (0.0067–0.0094 in)
Valve dimensions	
Valve head diameter A (intake)	30.90–31.10 mm (1.2165–1.2244 in)
Valve head diameter A (exhaust)	24.90–25.10 mm (0.9803–0.9882 in)

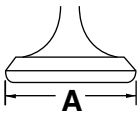

Valve face width B (intake)	1.697 mm (0.0668 in)
Valve face width B (exhaust)	1.909 mm (0.0752 in)

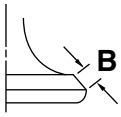

Valve seat width C (intake)	0.90–1.10 mm (0.0354–0.0433 in)
Valve seat width C (exhaust)	0.90–1.10 mm (0.0354–0.0433 in)

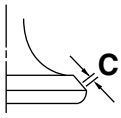

Valve margin thickness D (intake)	1.20 mm (0.0472 in)
Valve margin thickness D (exhaust)	0.85 mm (0.0335 in)

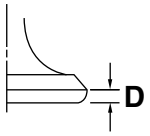

Valve stem diameter (intake)	4.975–4.990 mm (0.1959–0.1965 in)
Limit	4.945 mm (0.1947 in)
Valve stem diameter (exhaust)	4.460–4.475 mm (0.1756–0.1762 in)
Limit	4.430 mm (0.1744 in)
Valve guide inside diameter (intake)	5.000–5.012 mm (0.1969–0.1973 in)
Limit	5.050 mm (0.1988 in)
Valve guide inside diameter (exhaust)	4.500–4.512 mm (0.1772–0.1776 in)
Limit	4.550 mm (0.1791 in)
Valve-stem-to-valve-guide clearance (intake)	0.010–0.037 mm (0.0004–0.0015 in)
Limit	0.080 mm (0.0032 in)
Valve-stem-to-valve-guide clearance (exhaust)	0.025–0.052 mm (0.0010–0.0020 in)
Limit	0.100 mm (0.0039 in)
Valve stem runout	0.010 mm (0.0004 in)

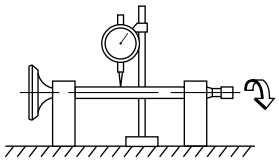

Valve spring

Free length (intake)	36.69 mm (1.44 in)
Limit	35.69 mm (1.41 in)
Free length (exhaust)	34.86 mm (1.37 in)
Limit	33.86 mm (1.33 in)
Installed length (intake)	31.40 mm (1.24 in)
Installed length (exhaust)	28.50 mm (1.12 in)
Spring rate K1 (intake)	29.65 N/mm (3.02 kgf/mm, 169.30 lbf/in)
Spring rate K2 (intake)	39.31 N/mm (4.01 kgf/mm, 224.46 lbf/in)
Spring rate K1 (exhaust)	23.11 N/mm (2.36 kgf/mm, 131.96 lbf/in)
Spring rate K2 (exhaust)	30.88 N/mm (3.15 kgf/mm, 176.32 lbf/in)
Installed compression spring force (intake)	146.00–168.00 N (14.89–17.13 kgf, 32.82–37.77 lbf)
Installed compression spring force (exhaust)	137.00–157.00 N (13.97–16.01 kgf, 30.80–35.29 lbf)
Spring tilt (intake)	2.5 °/1.6 mm (2.5 °/0.06 in)
Spring tilt (exhaust)	2.5 °/1.5 mm (2.5 °/0.06 in)

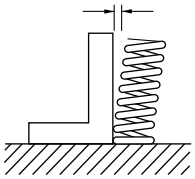

Winding direction (intake)	Clockwise
Winding direction (exhaust)	Clockwise
Cylinder	
Bore	77.000–77.010 mm (3.0315–3.0319 in)
Taper limit	0.050 mm (0.0020 in)
Out of round limit	0.050 mm (0.0020 in)
Piston	
Piston-to-cylinder clearance	0.030–0.055 mm (0.0012–0.0022 in)
Limit	0.15 mm (0.006 in)
Diameter D	76.955–76.970 mm (3.0297–3.0303 in)
Height H	6.0 mm (0.24 in)

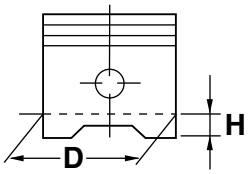

Offset	0.00 mm (0.0000 in)
Piston pin bore inside diameter	16.002–16.013 mm (0.6300–0.6304 in)
Limit	16.043 mm (0.6316 in)
Piston pin outside diameter	15.991–16.000 mm (0.6296–0.6299 in)
Limit	15.971 mm (0.6288 in)
Piston ring	
Top ring	
Ring type	Barrel
Dimensions (B × T)	0.90 × 2.70 mm (0.04 × 0.11 in)

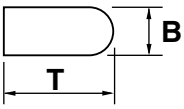

End gap (installed)	0.15–0.25 mm (0.0059–0.0098 in)
Limit	0.50 mm (0.0197 in)
Ring side clearance	0.030–0.065 mm (0.0012–0.0026 in)
Limit	0.120 mm (0.0047 in)
Oil ring	
Dimensions (B × T)	1.50 × 2.25 mm (0.06 × 0.89 in)

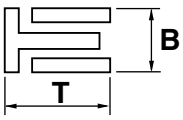

End gap (installed)	0.10–0.35 mm (0.0039–0.0138 in)

Crankshaft	
Width A	55.95–56.00 mm (2.203–2.205 in)
Runout limit C	0.030 mm (0.0012 in)
Big end side clearance D	0.150–0.450 mm (0.0059–0.0177 in)

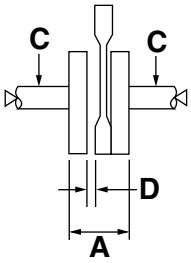

Balancer	
Balancer drive method	Gear
Clutch	
Clutch type	Wet, multiple-disc
Clutch release method	Inner push, cam push
Clutch lever free play	7.0–12.0 mm (0.28–0.47 in)
Friction plate thickness	2.90–3.10 mm (0.114–0.122 in)
Wear limit	2.85 mm (0.112 in)
Plate quantity	9 pcs
Clutch plate thickness	1.10–1.30 mm (0.043–0.051 in)
Plate quantity	8 pcs
Warpage limit	0.10 mm (0.004 in)
Clutch spring free length	47.80 mm (1.88 in)
Limit	46.80 mm (1.84 in)
Spring quantity	5 pcs
Push rod bending limit	0.10 mm (0.004 in)
Transmission	
Transmission type	Constant mesh 6-speed
Primary reduction system	Spur gear
Primary reduction ratio	3.353 (57/17)
Final drive	Chain
Secondary reduction ratio	3.846 (50/13)
Operation	Left foot operation
Gear ratio	
1st	2.385 (31/13)
2nd	1.813 (29/16)
3rd	1.444 (26/18)
4th	1.143 (24/21)
5th	0.957 (22/23)
6th	0.815 (22/27)
Shifting mechanism	
Shift mechanism type	Shift drum and guide bar
Shift fork guide bar bending limit	0.050 mm (0.0020 in)
Shift fork thickness	4.85 mm (0.1909 in)
Decompression device	
Device type	Auto decomp
Air filter	
Air filter element	Wet element
Air filter oil grade	Foam air-filter oil

Fuel pump	
Pump type	Electrical
Fuel injector	
Model/quantity	30NA-FZ31/1
Resistance	12 Ω
Throttle body	
Type/quantity	30RA-A95R/1
ID mark	2GB1 00
Fuel line pressure at idling	324.0 kPa (3.24 kgf/cm^2, 47.0 psi)
Throttle position sensor	
Resistance	6.30 kΩ
Output voltage (at idle)	0.5 V
Fuel injection sensor	
Crankshaft position sensor resistance	228–342 Ω (Gy–B)
Intake air pressure sensor output voltage	3.61–3.67 V at 101.3 kPa (3.61–3.67 V at 1.01 kgf/cm^2, 3.61–3.67 V at 14.7 psi)
Intake air temperature sensor resistance	290–390 Ω at 80 °C (290–390 Ω 176 °F)
Coolant temperature sensor resistance	2.51–2.78 kΩ at 20 °C (2.51–2.78 kΩ at 68 °F) 210–221 Ω at 100 °C (210–221 Ω at 212 °F)
Idling condition	
Engine idling speed	1900–2100 r/min
CO%	3.0–4.0 % (USA) (CAN)
Intake vacuum	25.3–29.3 kPa (190–220 mmHg, 7.5–8.7 inHg) (USA) (CAN)
Water temperature	70.0–90.0 °C (158.00–194.00 °F)
Oil temperature	70.0–80.0 °C (158.00–176.00 °F)
Throttle grip free play	3.0–5.0 mm (0.12–0.20 in)

CHASSIS SPECIFICATIONS

Chassis	
Frame type	Semi double cradle
Caster angle	26.33 °
Trail	114 mm (4.5 in)
Front wheel	
Wheel type	Spoke wheel
Rim size	21 × 1.60
Rim material	Aluminum
Wheel travel	310 mm (12.2 in)
Radial wheel runout limit	2.0 mm (0.08 in)
Lateral wheel runout limit	2.0 mm (0.08 in)
Wheel axle bending limit	0.50 mm (0.02 in)
Rear wheel	
Wheel type	Spoke wheel
Rim size	18 × 2.15
Rim material	Aluminum
Wheel travel	318 mm (12.4 in)
Radial wheel runout limit	2.0 mm (0.08 in)
Lateral wheel runout limit	2.0 mm (0.08 in)
Wheel axle bending limit	0.50 mm (0.02 in)
Front tire	
Type	With tube
Size	80/100-21 51M (USA) (CAN) 90/90-21 M/C 54M M+S (EUR) (AUS) (NZL) (ZAF)
Manufacturer/model	DUNLOP/GEOMAX MX51FA (USA) (CAN) PIRELLI/SIX DAYS EXTREME (EUR) (AUS) (NZL) (ZAF)
Rear tire	
Type	With tube
Size	110/100-18 64M (USA) (CAN) 130/90-18 M/C 69M M+S (EUR) (AUS) (NZL) (ZAF)
Manufacturer/model	DUNLOP/GEOMAX MX51 (USA) (CAN) PIRELLI/SIX DAYS EXTREME (EUR) (AUS) (NZL) (ZAF)
Tire air pressure (measured on cold tires)	
Front	100 kPa (1.00 kgf/cm^2, 15 psi)
Rear	100 kPa (1.00 kgf/cm^2, 15 psi)
Front brake	
Type	Single disc brake
Operation	Right hand operation
Front disc brake	
Disc outside diameter × thickness	250 × 3.0 mm (9.8 × 0.12 in)
Brake disc thickness limit	2.5 mm (0.10 in)
Brake disc runout limit (as measured on wheel)	0.15 mm (0.0059 in)
Brake pad lining thickness (inner)	4.4 mm (0.17 in)
Limit	1.0 mm (0.04 in)

Brake pad lining thickness (outer)	4.4 mm (0.17 in)
Limit	1.0 mm (0.04 in)
Master cylinder inside diameter	9.52 mm (0.37 in)
Caliper cylinder inside diameter	22.65 mm × 2 (0.89 in × 2)
Recommended brake fluid	DOT 4
Rear brake	
Type	Single disc brake
Operation	Right foot operation
Rear disc brake	
Disc outside diameter × thickness	245 × 4.0 mm (9.6 × 0.16 in)
Brake disc thickness limit	3.5 mm (0.14 in)
Brake disc runout limit (as measured on wheel)	0.15 mm (0.0059 in)
Brake pad lining thickness (inner)	6.4 mm (0.25 in)
Limit	1.0 mm (0.04 in)
Brake pad lining thickness (outer)	6.4 mm (0.25 in)
Limit	1.0 mm (0.04 in)
Master cylinder inside diameter	11.0 mm (0.43 in)
Caliper cylinder inside diameter	25.40 mm × 1 (1.00 in × 1)
Recommended brake fluid	DOT 4
Steering	
Steering bearing type	Taper roller bearing
Center to lock angle (left)	43.0 °
Center to lock angle (right)	43.0 °
Front suspension	
Type	Telescopic fork
Spring/shock absorber type	Coil spring/oil damper
Front fork travel	310.0 mm (12.20 in)
Fork spring free length	470.0 mm (18.50 in)
Limit	465.0 mm (18.31 in)
Fork spring installed length	470.0 mm (18.50 in)
Spring rate K1	4.40 N/mm (0.45 kgf/mm, 25.12 lbf/in)
Spring stroke K1	0.0–310.0 mm (0.00–12.20 in)
Inner tube outer diameter	48 mm (1.9 in)
Inner tube bending limit	0.2 mm (0.01 in)
Optional spring available	Yes
Recommended oil	Suspension oil S1
Quantity	540.0 cm^3 (18.26 US oz, 19.05 Imp.oz)
Rebound damping adjusting positions	
* Position in which the adjuster is turned in finger tight	
Minimum	20 click (s) out*
Standard	10 click (s) out*
Maximum	Fully turned in
Compression damping adjusting positions	
* Position in which the adjuster is turned in finger tight	
Minimum	20 click (s) out*
Standard	11 click (s) out*
Maximum (hard)	Fully turned in

Rear suspension	
Type	Swingarm (link suspension)
Spring/shock absorber type	Coil spring/gas-oil damper
Rear shock absorber assembly travel	126.0 mm (4.96 in)
Spring free length	275.0 mm (10.83 in)
Spring installed length	265.0 mm (10.43 in)
Spring rate K1	54.00 N/mm (5.51 kgf/mm, 308.34 lbf/in)
Spring stroke K1	0.0–150.0 mm (0.00–5.91 in)
Optional spring available	Yes
Enclosed gas/air pressure (STD)	980 kPa (9.8 kgf/cm^2, 139.4 psi)
Spring preload adjusting positions	
Minimum	Position in which the spring is turned in 1.5 mm (0.06 in) from its free length.
Standard	Position in which the spring is turned in 10 mm (0.39 in) from its free length.
Maximum	Position in which the spring is turned in 18 mm (0.71 in) from its free length.
Rebound damping adjusting positions	
* Position in which the adjuster is turned in finger tight	
Minimum	30 click (s) out*
Standard	14 click (s) out*
Maximum	Fully turned in
Compression damping adjusting positions (for fast compression damping)	
* Position in which the adjuster is turned in finger tight	
Minimum	2 turn (s) out*
Standard	1-1/4 turn (s) out*
Maximum	Fully turned in
Compression damping adjusting positions (for slow compression damping)	
* Position in which the adjuster is turned in finger tight	
Minimum	20 click (s) out*
Standard	10 click (s) out*
Maximum	Fully turned in
Swingarm	
Swingarm end free play limit (radial)	1.0 mm (0.04 in)
Swingarm end free play limit (axial)	0.2–0.9 mm (0.01–0.04 in)
Drive chain	
Size/manufacturer	520VM2/DAIDO
Number of links	114
Drive chain slack	50–60 mm (1.97–2.36 in)
15-link length limit	239.3 mm (9.42 in)

ELECTRICAL SPECIFICATIONS

Voltage	
System voltage	12 V
Ignition system	
Ignition system	TCI
Advancer type	Digital
Ignition timing (B.T.D.C.)	10.0 ° at 2000 r/min
Engine control unit	
Model/manufacturer	2GB0/YAMAHA (USA) (CAN) 2GB1/YAMAHA (EUR) (AUS) (NZL) (ZAF)
Ignition coil	
Minimum ignition spark gap	6.0 mm (0.24 in)
Primary coil resistance	2.16–2.64 Ω
Secondary coil resistance	8.64–12.96 kΩ
AC magneto	
Standard output	14.0 V, 160 W at 5000 r/min
Stator coil resistance	0.528–0.792 Ω (W–W)
Rectifier/regulator	
Regulator type	Semi conductor-short circuit
No load regulated voltage	14.1–14.9 V
Rectifier capacity (DC)	23.0 A
Battery	
Model	YTZ7S (F)
Voltage, capacity	12 V, 6.0 Ah
Specific gravity	1.31
Manufacturer	GS YUASA
Ten hour rate charging current	0.60 A
Headlight	
Bulb type	Halogen bulb
Bulb voltage, wattage × quantity	
Headlight	12 V, 35 W/35 W × 1
Tail/brake light	LED
Meter lighting	EL (Electroluminescent)
Indicator light	
Fuel level warning light	12 V, 1.7 W × 1
Engine trouble warning light	12 V, 1.7 W × 1
Electric starting system	
System type	Constant mesh
Starter motor	
Power output	0.35 kW
Armature coil resistance	0.0189–0.0231 Ω
Brush overall length	7.0 mm (0.28 in)
Limit	3.50 mm (0.14 in)
Brush spring force	3.92–5.88 N (400–600 gf, 14.11–21.17 oz)
Commutator diameter	17.6 mm (0.69 in)
Limit	16.6 mm (0.65 in)
Mica undercut (depth)	1.50 mm (0.06 in)

Starter relay	
Amperage	180.0 A
Coil resistance	4.18–4.62 Ω
Starting circuit cut-off relay	
Coil resistance	75.6–92.5 Ω
Headlight relay	
Coil resistance	86.4–105.6 Ω
Fuses	
Main fuse	15.0 A
Radiator fan motor fuse	5.0 A
Spare fuse	15.0 A

TIGHTENING TORQUES

GENERAL TIGHTENING TORQUE SPECIFICATIONS

This chart specifies tightening torques for standard fasteners with a standard ISO thread pitch. Tightening torque specifications for special components or assemblies are provided for each chapter of this manual. To avoid warpage, tighten multi-fastener assemblies in a criss-cross pattern and progressive stages until the specified tightening torque is reached. Unless otherwise specified, tightening torque specifications require clean, dry threads. Components should be at room temperature.

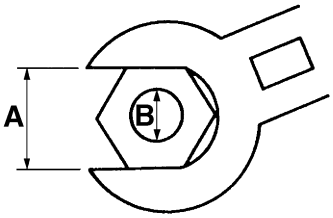

A. Distance between flats
B. Outside thread diameter

A (nut)	B (bolt)	General tightening torques		
		Nm	m·kgf	ft·lbf
10 mm	6 mm	6	0.6	4.3
12 mm	8 mm	15	1.5	11
14 mm	10 mm	30	3.0	22
17 mm	12 mm	55	5.5	40
19 mm	14 mm	85	8.5	61
22 mm	16 mm	130	13.0	94

ENGINE TIGHTENING TORQUES

TIP

△- marked portion shall be checked for torque tightening after break-in or before each race.

ITEM	Thread size	Q'ty	TIGHTENING TORQUES	Remarks
Camshaft cap bolt	M6	8	10 Nm (1.0 m·kgf, 7.2 ft·lbf)	
Cylinder head blind plug	M12	1	28 Nm (2.8 m·kgf, 20 ft·lbf)	
Spark plug	M10	1	13 Nm (1.3 m·kgf, 9.4 ft·lbf)	
Cylinder head stud bolt	M6	2	7 Nm (0.7 m·kgf, 5.1 ft·lbf)	
Cylinder head stud bolt (exhaust pipe)	M8	2	15 Nm (1.5 m·kgf, 11 ft·lbf)	
Cylinder head bolts	M9	4	33 Nm (3.3 m·kgf, 24 ft·lbf)	
Cylinder head nuts	M6	2	10 Nm (1.0 m·kgf, 7.2 ft·lbf)	
Cylinder head cover bolt	M6	2	10 Nm (1.0 m·kgf, 7.2 ft·lbf)	
Cylinder bolt	M6	1	10 Nm (1.0 m·kgf, 7.2 ft·lbf)	
Oil pressure check bolt	M6	1	10 Nm (1.0 m·kgf, 7.2 ft·lbf)	
Balancer weight plate screw	M6	2	10 Nm (1.0 m·kgf, 7.2 ft·lbf)	
Balancer driven gear nut	M14	1	50 Nm (5.0 m·kgf, 36 ft·lbf)	
Balancer nut	M10	1	38 Nm (3.8 m·kgf, 27 ft·lbf)	
Timing chain guide stopper plate (exhaust side)	M6	1	10 Nm (1.0 m·kgf, 7.2 ft·lbf)	
Timing chain tensioner cap bolt	M6	1	6 Nm (0.6 m·kgf, 4.3 ft·lbf)	
Timing chain tensioner bolt	M6	2	10 Nm (1.0 m·kgf, 7.2 ft·lbf)	
Coolant drain bolt	M6	1	10 Nm (1.0 m·kgf, 7.2 ft·lbf)	
Radiator hose clamp screw	M6	8	1.5 Nm (0.15 m·kgf, 1.1 ft·lbf)	
Radiator bolt	M6	4	10 Nm (1.0 m·kgf, 7.2 ft·lbf)	
Radiator pipe bolt	M6	1	10 Nm (1.0 m·kgf, 7.2 ft·lbf)	
Radiator pipe joint bolt	M6	1	10 Nm (1.0 m·kgf, 7.2 ft·lbf)	
Radiator fan bolt	M6	3	8 Nm (0.8 m·kgf, 5.8 ft·lbf)	
Water pump housing cover bolt	M6	4	10 Nm (1.0 m·kgf, 7.2 ft·lbf)	
Oil pump bolt	M5	2	5 Nm (0.5 m·kgf, 3.6 ft·lbf)	
Oil pump cover screw	M4	1	2.0 Nm (0.20 m·kgf, 1.4 ft·lbf)	
Oil strainer bolt	M6	1	10 Nm (1.0 m·kgf, 7.2 ft·lbf)	
Throttle cable cover bolt	M5	1	3.5 Nm (0.35 m·kgf, 2.5 ft·lbf)	
Throttle body joint bolt	M6	2	10 Nm (1.0 m·kgf, 7.2 ft·lbf)	
Throttle body joint clamp bolt	M5	1	3.0 Nm (0.30 m·kgf, 2.2 ft·lbf)	
Air filter joint clamp bolt	M4	1	3.5 Nm (0.35 m·kgf, 2.5 ft·lbf)	
Air filter case bolt	M6	3	7 Nm (0.7 m·kgf, 5.1 ft·lbf)	
Air filter bolt	M6	1	2.0 Nm (0.20 m·kgf, 1.4 ft·lbf)	

ITEM	Thread size	Q'ty	TIGHTENING TORQUES	Remarks
Air filter guide holder screw	M5	8	2.5 Nm (0.25 m·kgf, 1.8 ft·lbf)	
Air filter case cap screw	M5	1	2.5 Nm (0.25 m·kgf, 1.8 ft·lbf)	
Starter knob/Idle screw	M12	1	2.1 Nm (0.21 m·kgf, 1.5 ft·lbf)	
Throttle cable nut (pull)	M10	1	7 Nm (0.7 m·kgf, 5.1 ft·lbf)	
Throttle cable nut (return)	M10	1	7 Nm (0.7 m·kgf, 5.1 ft·lbf)	
Clutch cable adjuster and locknut	M6	1	4.0 Nm (0.40 m·kgf, 2.9 ft·lbf)	
Clutch cable locknut (engine side)	M8	1	7 Nm (0.7 m·kgf, 5.1 ft·lbf)	
Exhaust pipe nut	M8	2	See TIP.	
Exhaust pipe protector screw	M6	4	10 Nm (1.0 m·kgf, 7.2 ft·lbf)	
Exhaust pipe bracket bolt	M8	1	20 Nm (2.0 m·kgf, 14 ft·lbf)	
Frame and silencer bolt (front)	M8	1	30 Nm (3.0 m·kgf, 22 ft·lbf)	
Frame and silencer bolt (rear)	M8	1	30 Nm (3.0 m·kgf, 22 ft·lbf)	
Exhaust pipe clamp bolt	M8	2	12 Nm (1.2 m·kgf, 8.7 ft·lbf)	
Spark arrester bolt	M5	4	9 Nm (0.9 m·kgf, 6.5 ft·lbf)	
Muffler cap bolt	M5	6	5 Nm (0.5 m·kgf, 3.6 ft·lbf)	
Oil nozzle bolt	M5	1	5 Nm (0.5 m·kgf, 3.6 ft·lbf)	
Engine oil drain bolt	M10	1	20 Nm (2.0 m·kgf, 14 ft·lbf)	
Crankcase bolt	M6	12	12 Nm (1.2 m·kgf, 8.7 ft·lbf)	
Clutch cable holder bolt	M6	2	10 Nm (1.0 m·kgf, 7.2 ft·lbf)	
Crankshaft end accessing screw	M36	1	10 Nm (1.0 m·kgf, 7.2 ft·lbf)	
Timing mark accessing screw	M14	1	6 Nm (0.6 m·kgf, 4.3 ft·lbf)	
Drive chain sprocket cover bolt	M6	2	7 Nm (0.7 m·kgf, 5.1 ft·lbf)	
Crankcase bearing cover plate screw	M6	6	10 Nm (1.0 m·kgf, 7.2 ft·lbf)	
Crankcase bearing cover plate screw (crankshaft)	M8	4	22 Nm (2.2 m·kgf, 16 ft·lbf)	
Oil passage squeeze nozzle	M8	1	3.0 Nm (0.30 m·kgf, 2.2 ft·lbf)	
Clutch cover bolt	M6	7	10 Nm (1.0 m·kgf, 7.2 ft·lbf)	
Left crankcase cover bolt	M6	7	10 Nm (1.0 m·kgf, 7.2 ft·lbf)	
Right crankcase cover bolt	M6	11	10 Nm (1.0 m·kgf, 7.2 ft·lbf)	
Oil filter element cover bolt	M6	2	10 Nm (1.0 m·kgf, 7.2 ft·lbf)	
Kick shaft ratchet wheel guide bolt	M6	2	12 Nm (1.2 m·kgf, 8.7 ft·lbf)	
Kick starter lever bolt	M8	1	33 Nm (3.3 m·kgf, 24 ft·lbf)	
Kick starter lever boss screw	M6	1	7 Nm (0.7 m·kgf, 5.1 ft·lbf)	
Primary drive gear nut	M16	1	75 Nm (7.5 m·kgf, 54 ft·lbf)	
Clutch spring bolt	M6	5	10 Nm (1.0 m·kgf, 7.2 ft·lbf)	

ITEM	Thread size	Q'ty	TIGHTENING TORQUES	Remarks
Clutch boss nut	M16	1	75 Nm (7.5 m·kgf, 54 ft·lbf)	Use a lock washer.
Drive sprocket nut	M18	1	75 Nm (7.5 m·kgf, 54 ft·lbf)	Use a lock washer.
Segment	M8	1	30 Nm (3.0 m·kgf, 22 ft·lbf)	
Shift guide bolt	M6	2	10 Nm (1.0 m·kgf, 7.2 ft·lbf)	
Stopper lever bolt	M6	1	10 Nm (1.0 m·kgf, 7.2 ft·lbf)	
△ Shift pedal bolt	M6	1	12 Nm (1.2 m·kgf, 8.7 ft·lbf)	
Rotor nut	M12	1	65 Nm (6.5 m·kgf, 47 ft·lbf)	
Stator screw	M5	2	7 Nm (0.7 m·kgf, 5.1 ft·lbf)	
Crankshaft position sensor bolt	M6	2	10 Nm (1.0 m·kgf, 7.2 ft·lbf)	
Damper assembly cover bolt	M6	2	10 Nm (1.0 m·kgf, 7.2 ft·lbf)	
Starter clutch bolt	M6	6	16 Nm (1.6 m·kgf, 12 ft·lbf)	
Starter motor bolt	M6	1	12 Nm (1.2 m·kgf, 8.7 ft·lbf)	
Coolant temperature sensor	M10	1	16 Nm (1.6 m·kgf, 12 ft·lbf)	
Neutral switch bolt	M5	2	3.5 Nm (0.35 m·kgf, 2.5 ft·lbf)	
Intake air temperature sensor screw	M5	1	1.5 Nm (0.15 m·kgf, 1.1 ft·lbf)	
Rectifier/regulator bolt	M6	2	7 Nm (0.7 m·kgf, 5.1 ft·lbf)	
ECU bolt	M5	2	3.8 Nm (0.38 m·kgf, 2.8 ft·lbf)	
Ignition coil bolt	M6	2	7 Nm (0.7 m·kgf, 5.1 ft·lbf)	
Throttle position sensor screw	M5	2	3.4 Nm (0.34 m·kgf, 2.5 ft·lbf)	
Intake air pressure sensor screw	M6	1	5 Nm (0.5 m·kgf, 3.6 ft·lbf)	

TIP

Exhaust pipe nut

First temporarily tighten nuts to 13 Nm (1.3 m·kgf, 9.4 ft·lbf). Then retighten them to 20 Nm (2.0 m·kgf, 14 ft·lbf).

CHASSIS TIGHTENING TORQUES

TIP

△- marked portion shall be checked for torque tightening after break-in or before each race.

	ITEM	Thread size	Q'ty	TIGHTENING TORQUES	Remarks
△	Outer tube and upper bracket bolt	M8	4	21 Nm (2.1 m·kgf, 15 ft·lbf)	
△	Outer tube and lower bracket bolt	M8	4	21 Nm (2.1 m·kgf, 15 ft·lbf)	
△	Upper bracket and steering stem nut	M24	1	145 Nm (14.5 m·kgf, 105 ft·lbf)	
△	Upper handlebar holder bolt	M8	4	28 Nm (2.8 m·kgf, 20 ft·lbf)	
△	Lower handlebar holder nut	M10	2	40 Nm (4.0 m·kgf, 29 ft·lbf)	
	Engine stop switch screw	M3	1	0.5 Nm (0.05 m·kgf, 0.36 ft·lbf)	
	Start switch screw	M4	1	0.5 Nm (0.05 m·kgf, 0.36 ft·lbf)	
△	Lower ring nut	M28	1	See TIP.	
	Outer tube and damper assembly	M51	2	30 Nm (3.0 m·kgf, 22 ft·lbf)	
	Inner tube and adjuster	M22	2	55 Nm (5.5 m·kgf, 40 ft·lbf)	
	Damper assembly and base valve	M42	2	28 Nm (2.8 m·kgf, 20 ft·lbf)	
	Damper assembly adjuster	M12	2	29 Nm (2.9 m·kgf, 21 ft·lbf)	
	Bleed screw (front fork) and base valve	M5	2	1.3 Nm (0.13 m·kgf, 0.94 ft·lbf)	
△	Front fork protector bolt	M6	6	7 Nm (0.7 m·kgf, 5.1 ft·lbf)	
△	Front fork protector and brake hose holder nut	M6	2	7 Nm (0.7 m·kgf, 5.1 ft·lbf)	
	Throttle grip cap screw	M5	2	3.8 Nm (0.38 m·kgf, 2.8 ft·lbf)	
	Clutch lever holder bolt	M6	2	3.8 Nm (0.38 m·kgf, 2.8 ft·lbf)	
	Clutch lever nut	M6	1	4.0 Nm (0.40 m·kgf, 2.9 ft·lbf)	
△	Front brake master cylinder holder bolt	M6	2	9 Nm (0.9 m·kgf, 6.5 ft·lbf)	
	Front brake master cylinder reservoir cap screw	M4	2	1.5 Nm (0.15 m·kgf, 1.1 ft·lbf)	
	Front brake lever pivot bolt	M6	1	6 Nm (0.6 m·kgf, 4.3 ft·lbf)	
	Front brake lever pivot nut	M6	1	6 Nm (0.6 m·kgf, 4.3 ft·lbf)	
	Front brake lever position locknut	M6	1	5 Nm (0.5 m·kgf, 3.6 ft·lbf)	
△	Front brake hose holder and lower bracket bolt	M6	1	9 Nm (0.9 m·kgf, 6.5 ft·lbf)	
△	Front brake hose union bolt	M10	2	30 Nm (3.0 m·kgf, 22 ft·lbf)	
△	Front brake caliper bolt	M8	2	23 Nm (2.3 m·kgf, 17 ft·lbf)	
	Front brake pad pin	M10	1	17 Nm (1.7 m·kgf, 12 ft·lbf)	
	Front brake pad pin plug	M10	1	2.5 Nm (0.25 m·kgf, 1.8 ft·lbf)	
△	Front brake caliper bleed screw	M8	1	6 Nm (0.6 m·kgf, 4.3 ft·lbf)	
△	Front wheel axle nut	M16	1	90 Nm (9.0 m·kgf, 65 ft·lbf)	
△	Front wheel axle pinch bolt	M8	4	21 Nm (2.1 m·kgf, 15 ft·lbf)	

	ITEM	Thread size	Q'ty	TIGHTENING TORQUES	Remarks
△	Front brake disc bolt	M6	6	12 Nm (1.2 m·kgf, 8.7 ft·lbf)	
△	Rear brake disc bolt	M6	6	14 Nm (1.4 m·kgf, 10 ft·lbf)	
	Footrest bracket bolt	M10	4	55 Nm (5.5 m·kgf, 40 ft·lbf)	
	Sidestand bolt	M10	1	25 Nm (2.5 m·kgf, 18 ft·lbf)	
△	Rear brake pedal bolt	M8	1	26 Nm (2.6 m·kgf, 19 ft·lbf)	
	Rear brake pedal position locknut	M6	1	6 Nm (0.6 m·kgf, 4.3 ft·lbf)	
△	Rear brake master cylinder bolt	M6	2	10 Nm (1.0 m·kgf, 7.2 ft·lbf)	
	Rear brake master cylinder reservoir cap bolt	M4	2	1.5 Nm (0.15 m·kgf, 1.1 ft·lbf)	
△	Rear brake hose union bolt	M10	2	30 Nm (3.0 m·kgf, 22 ft·lbf)	
△	Rear brake caliper bleed screw	M8	1	6 Nm (0.6 m·kgf, 4.3 ft·lbf)	
	Rear brake pad pin	M10	1	17 Nm (1.7 m·kgf, 12 ft·lbf)	
	Rear brake pad pin plug	M10	1	2.5 Nm (0.25 m·kgf, 1.8 ft·lbf)	
△	Rear wheel axle nut	M22	1	125 Nm (12.5 m·kgf, 90 ft·lbf)	
	Drive chain puller adjust bolt and locknut	M8	2	21 Nm (2.1 m·kgf, 15 ft·lbf)	
△	Rear wheel sprocket nut	M8	6	50 Nm (5.0 m·kgf, 36 ft·lbf)	
△	Nipple (spoke)	—	72	2.5 Nm (0.25 m·kgf, 1.8 ft·lbf)	
△	Rear brake disc cover bolt	M6	2	10 Nm (1.0 m·kgf, 7.2 ft·lbf)	
△	Rear brake caliper protector bolt	M6	2	7 Nm (0.7 m·kgf, 5.1 ft·lbf)	
△	Engine mounting bolt (upper side)	M10	2	45 Nm (4.5 m·kgf, 33 ft·lbf)	
△	Engine mounting bolt (front side)	M10	1	55 Nm (5.5 m·kgf, 40 ft·lbf)	
△	Engine mounting bolt (lower side)	M10	1	53 Nm (5.3 m·kgf, 38 ft·lbf)	
△	Engine bracket bolt (upper side)	M8	4	34 Nm (3.4 m·kgf, 25 ft·lbf)	
△	Engine bracket bolt (front side)	M8	4	34 Nm (3.4 m·kgf, 25 ft·lbf)	
△	Rear frame and frame bolt	M8	4	38 Nm (3.8 m·kgf, 27 ft·lbf)	
△	Engine guard bolt	M6	3	7 Nm (0.7 m·kgf, 5.1 ft·lbf)	
△	Pivot shaft and nut	M16	1	85 Nm (8.5 m·kgf, 61 ft·lbf)	
△	Rear shock absorber assembly upper bolt	M10	1	56 Nm (5.6 m·kgf, 41 ft·lbf)	
△	Rear shock absorber assembly lower bolt	M10	1	53 Nm (5.3 m·kgf, 38 ft·lbf)	
	Rear shock absorber locknut	M60	1	30 Nm (3.0 m·kgf, 22 ft·lbf)	
△	Relay arm bolt (swingarm side)	M14	1	70 Nm (7.0 m·kgf, 51 ft·lbf)	
△	Connecting arm bolt (relay arm side)	M14	1	80 Nm (8.0 m·kgf, 58 ft·lbf)	
△	Connecting arm bolt (frame side)	M14	1	80 Nm (8.0 m·kgf, 58 ft·lbf)	
△	Swingarm and brake hose holder screw	M5	4	3.5 Nm (0.35 m·kgf, 2.5 ft·lbf)	
	Drive chain tensioner bolt (upper side)	M8	1	16 Nm (1.6 m·kgf, 12 ft·lbf)	

	ITEM	Thread size	Q'ty	TIGHTENING TORQUES	Remarks
	Drive chain tensioner bolt (lower side)	M8	1	16 Nm (1.6 m·kgf, 12 ft·lbf)	
	Drive chain support bolt	M6	1	7 Nm (0.7 m·kgf, 5.1 ft·lbf)	
	Drive chain support nut	M6	2	7 Nm (0.7 m·kgf, 5.1 ft·lbf)	
	Drive chain guide bolt	M5	3	4.0 Nm (0.40 m·kgf, 2.9 ft·lbf)	
△	Rear frame and left cover bolt	M6	2	7 Nm (0.7 m·kgf, 5.1 ft·lbf)	
△	Fuel tank bolt (front side)	M6	2	7 Nm (0.7 m·kgf, 5.1 ft·lbf)	
	Fuel tank bolt (rear side)	M6	1	9 Nm (0.9 m·kgf, 6.5 ft·lbf)	
	Fuel tank bracket bolt (front side)	M6	4	7 Nm (0.7 m·kgf, 5.1 ft·lbf)	
	Fuel tank bracket bolt (rear side)	M6	2	7 Nm (0.7 m·kgf, 5.1 ft·lbf)	
△	Fuel pump bolt	M5	6	4.0 Nm (0.40 m·kgf, 2.9 ft·lbf)	
△	Fuel sender screw	M6	2	4.0 Nm (0.40 m·kgf, 2.9 ft·lbf)	
	Fuel inlet pipe screw	M5	2	3.4 Nm (0.34 m·kgf, 2.5 ft·lbf)	
	Fuel tank cap cover bolt	M6	2	4.0 Nm (0.40 m·kgf, 2.9 ft·lbf)	
	Seat set bracket and fuel tank screw	M6	1	7 Nm (0.7 m·kgf, 5.1 ft·lbf)	
△	Seat bolt	M8	2	22 Nm (2.2 m·kgf, 16 ft·lbf)	
△	Left side cover bolt	M6	1	7 Nm (0.7 m·kgf, 5.1 ft·lbf)	
△	Right side cover bolt	M6	2	7 Nm (0.7 m·kgf, 5.1 ft·lbf)	
△	Frame and air scoop bolt	M6	2	7 Nm (0.7 m·kgf, 5.1 ft·lbf)	
△	Fuel tank and air scoop bolt	M6	2	7 Nm (0.7 m·kgf, 5.1 ft·lbf)	
△	Radiator guard and air scoop bolt	M6	4	7 Nm (0.7 m·kgf, 5.1 ft·lbf)	
△	Front fender bolt	M6	4	10 Nm (1.0 m·kgf, 7.2 ft·lbf)	
△	Rear fender bolt (front side)	M6	4	7 Nm (0.7 m·kgf, 5.1 ft·lbf)	
△	Rear fender bolt (rear side)	M6	2	16 Nm (1.6 m·kgf, 12 ft·lbf)	
△	Mud flap screw	—	2	1.3 Nm (0.13 m·kgf, 0.94 ft·lbf)	
	Headlight body and headlight stay bolt	M6	2	7 Nm (0.7 m·kgf, 5.1 ft·lbf)	
	Multi-function meter nut	M5	2	3.8 Nm (0.38 m·kgf, 2.8 ft·lbf)	
	Multi-function meter bracket bolt	M6	1	7 Nm (0.7 m·kgf, 5.1 ft·lbf)	
△	Front brake hose guide and head-light stay bolt	M5	1	3.8 Nm (0.38 m·kgf, 2.8 ft·lbf)	
	Plate 1 and front fork protector bolt	M5	2	3.8 Nm (0.38 m·kgf, 2.8 ft·lbf)	
	Plate 2 and front fork protector screw	—	2	0.5 Nm (0.05 m·kgf, 0.36 ft·lbf)	
	Speed sensor lead holder and speed sensor lead bracket bolt	M6	1	7 Nm (0.7 m·kgf, 5.1 ft·lbf)	
	Speed sensor lead bracket and low-er bracket bolt	M6	1	13 Nm (1.3 m·kgf, 9.4 ft·lbf)	
	Starter relay and positive battery lead bolt	M6	1	3.5 Nm (0.35 m·kgf, 2.5 ft·lbf)	

ITEM	Thread size	Q'ty	TIGHTENING TORQUES	Remarks
Starter relay and starter motor lead bolt	M6	1	3.5 Nm (0.35 m·kgf, 2.5 ft·lbf)	
Lean angle sensor bolt	M4	2	3.8 Nm (0.38 m·kgf, 2.8 ft·lbf)	
Taillight assembly screw	—	3	1.1 Nm (0.11 m·kgf, 0.80 ft·lbf)	
Taillight lead clamp and rear fender	—	3	0.5 Nm (0.05 m·kgf, 0.36 ft·lbf)	
Battery bracket bolt	M6	4	7 Nm (0.7 m·kgf, 5.1 ft·lbf)	
Frame and battery negative lead bolt	M6	1	7 Nm (0.7 m·kgf, 5.1 ft·lbf)	
Rear fender and relay bracket screw	—	2	1.1 Nm (0.11 m·kgf, 0.80 ft·lbf)	
Front reflector nut (For Canada)	M6	2	3.8 Nm (0.38 m·kgf, 2.8 ft·lbf)	
Rear reflector nut (For Canada)	M5	3	1.8 Nm (0.18 m·kgf, 1.3 ft·lbf)	

TIP

Lower ring nut

1. First, tighten the lower ring nut approximately 38 Nm (3.8 m·kgf, 27 ft·lbf) by using the steering nut wrench, then loosen the lower ring nut one turn.
2. Retighten the lower ring nut 7 Nm (0.7 m·kgf, 5.1 ft·lbf).

LUBRICATION POINTS AND LUBRICANT TYPES

ENGINE

Lubrication point	Lubricant types
Oil seal lips	LS
Bearing	E
O-ring	LS
Cylinder head bolt threads, seats, washers	M
Valve stems	M
Valve stem ends	M
Valve lifter outer surface	E
Camshaft lobe and journal	M
Valve lifter top surface	M
Crankshaft journal	M
Crankshaft big end thrust surfaces	E
Piston outer surface	E
Piston pin outer surface	E
Balancer shaft journal (left)	M
Decompression system moving parts	E
Water pump impeller shaft	E
Oil pump rotors (inner and outer)	E
Oil passage gasket	LS
Oil pump shaft	E
Kick gear and ratchet wheel	M
Kick shaft	E
Kick idle gear inner surface	E
Ratchet wheel and ratchet wheel guide contacting portion	M
Primary drive gear nut threads and contacting surface	E
Primary driven gear inner surface and end surface	E
Clutch push rod washer	E
Clutch push rod 1 outer surface	E
Clutch push rod 1 thrust surface	E
Clutch push rod 2 outer surface	E
Push lever shaft outer surface	E
Transmission gear inner surface (wheel and pinion) and collar	M
Transmission gears (shift fork groove)	E
Shift cam grooves	E
Shift fork and shift fork guide outer surface	E
Shift shaft	E
Shift lever assembly moving parts	E
Damper assembly shaft, thrust surfaces, washers	E

Lubrication point	Lubricant types
Starter idle gear inner surface, thrust surfaces	E
Starter clutch drive gear inner surface, thrust surfaces	E
Cylinder head cover gasket	Three bond No.1215®
Crankcase mating surface	Three bond No.1215®
Stator assembly lead grommet	Three bond No.1215®

CHASSIS

Lubrication point	Lubricant types
Upper bearings (steering head)	LS
Upper bearings and bearing race cover (steering head)	LS
Lower bearings and oil seal lip (steering head)	LS
Steering stem threads and nut contacting surface	LS
Pivot shaft bearing	M
Swingarm pivot portion (collar side surface and thrust bearing)	M
Swingarm pivot portion (collar outer surface)	M
Swingarm pivot portion (oil seal lip)	M
Pivot shaft outer surface	M
Relay arm bearing and oil seal lip	M
Relay arm thrust washer surface (both sides)	M
Relay arm collar outer surface and bolt outer surface	M
Relay arm bolt threads (swingarm side)	M
Connecting arm bearing and oil seal lip	M
Connecting arm collar outer surface and bolt outer surface	M
Rear shock absorber assembly collar outer surface and dust seal lip (upper side)	M
Rear shock absorber assembly bearing and dust seal lip (lower side)	M
Brake pedal pivot portion (O-ring and bolt outer surface)	LS
Front wheel oil seal lip	LS
Front wheel axle outer surface	LS
Speed sensor oil seal lip	LS
Rear wheel oil seal lip	LS
Rear wheel axle outer surface	LS
Sidestand pivot portion and collar outer surface	LS
Brake lever contacting portion (front brake master cylinder)	S
Front brake lever bolt outer surface	S
Clutch lever sliding surface and bolt outer surface	LS
Clutch lever adjuster rubber lip	LS
Clutch cable end (clutch lever side)	LS

Lubrication point	Lubricant types
Tube guide (throttle grip) inner surface and throttle cable end	LS
Front brake caliper piston	BF
Front brake caliper piston seal	S
Front brake caliper dust seal	S
Front brake caliper piston outer surface	BF
Front brake caliper pin bolt and boot	S
Front brake master cylinder push rod end	S
Front brake master cylinder kit	BF
Rear brake caliper piston	BF
Rear brake caliper piston seal	S
Rear brake caliper dust seal	S
Rear brake caliper piston outer surface	BF
Rear brake caliper pin bolt and boot	S
Rear brake master cylinder push rod end	S
Rear brake master cylinder kit	BF

LUBRICATION SYSTEM CHART AND DIAGRAMS

LUBRICATION DIAGRAMS

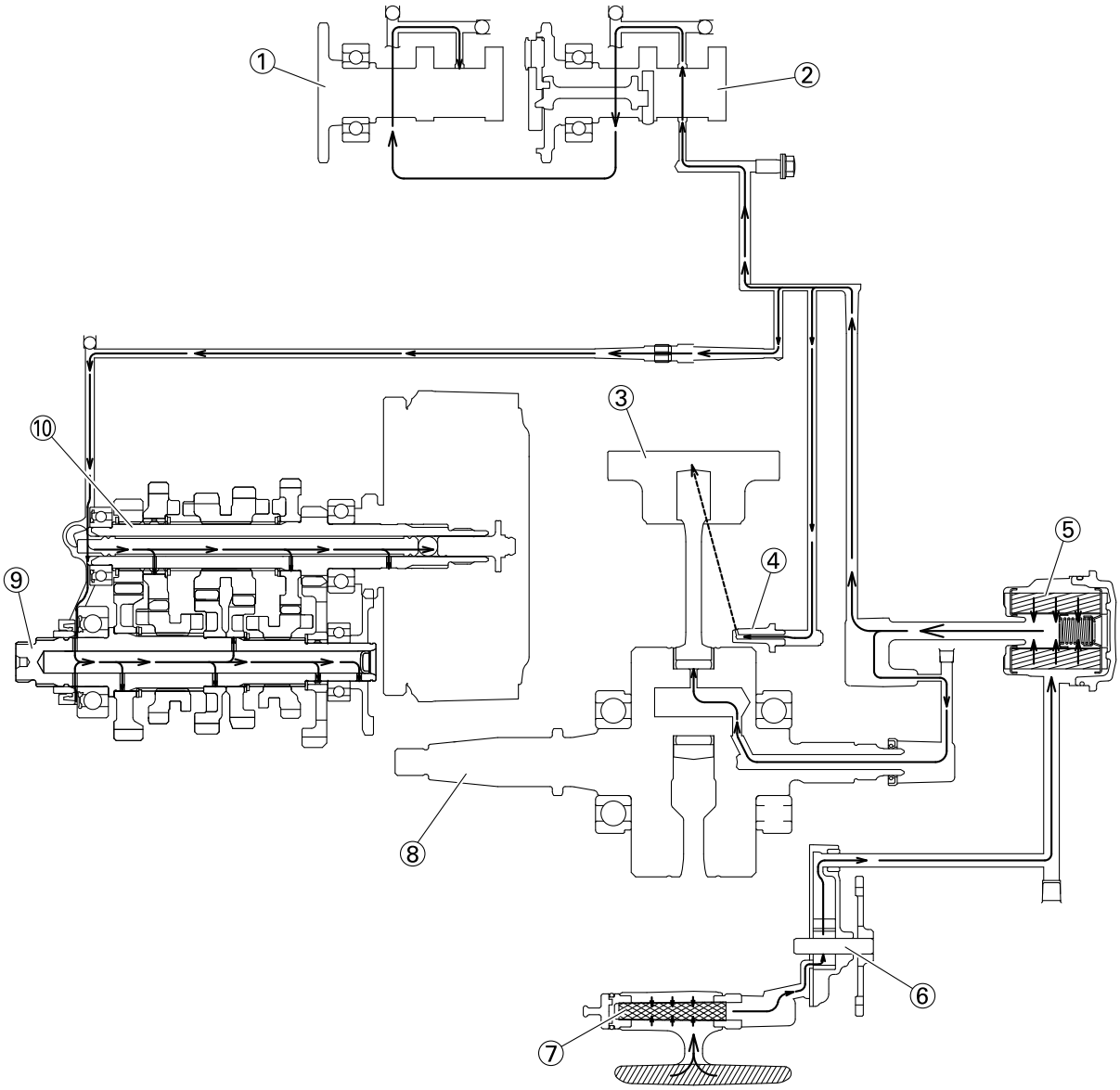

1. Intake camshaft
2. Exhaust camshaft
3. Piston
4. Oil nozzle
5. Oil filter element
6. Oil pump
7. Oil strainer
8. Crankshaft
9. Drive axle
10. Main axle

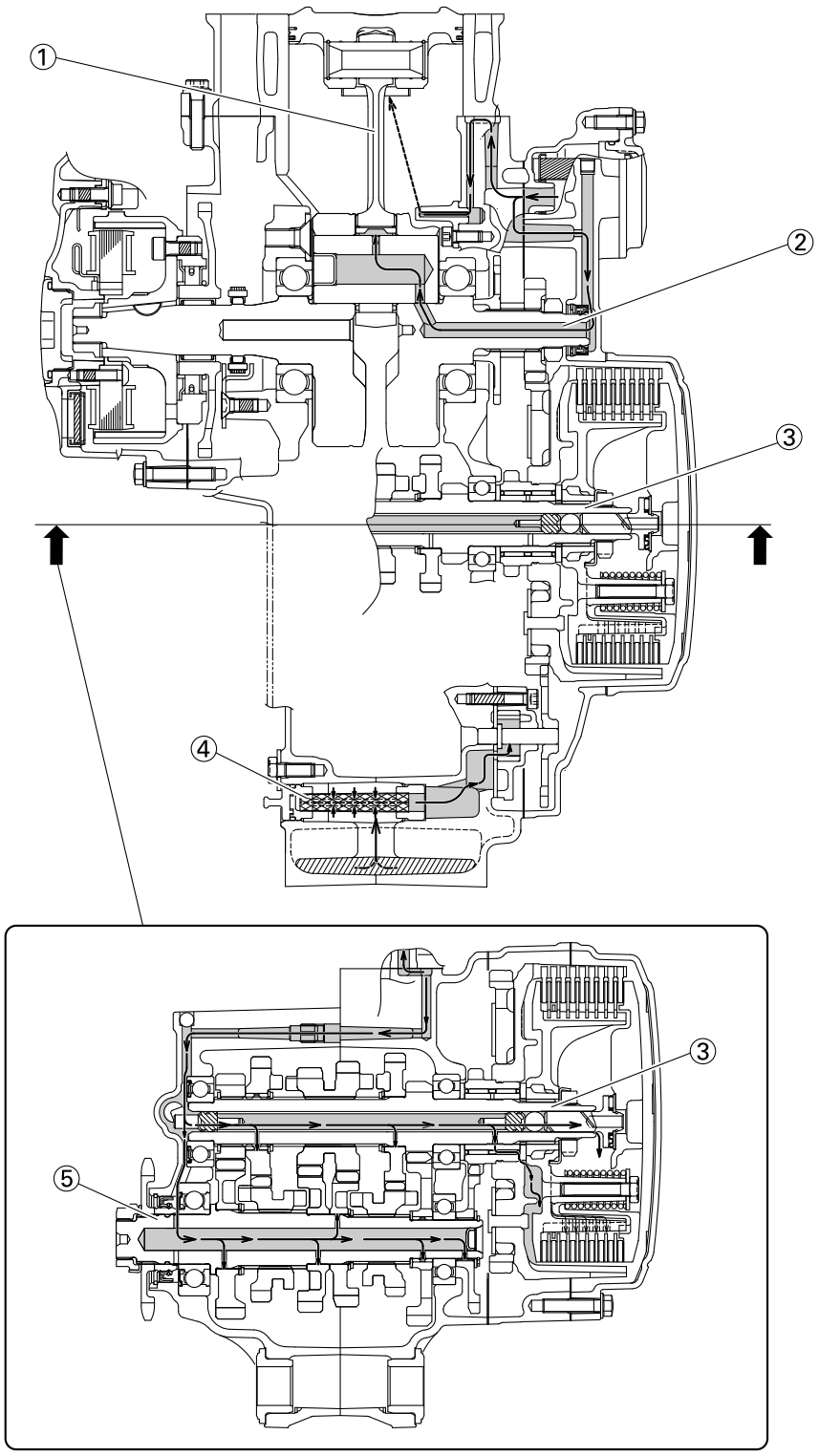
①
②
③
④
③
⑤

1. Connecting rod
2. Crankshaft
3. Main axle
4. Oil strainer
5. Drive axle

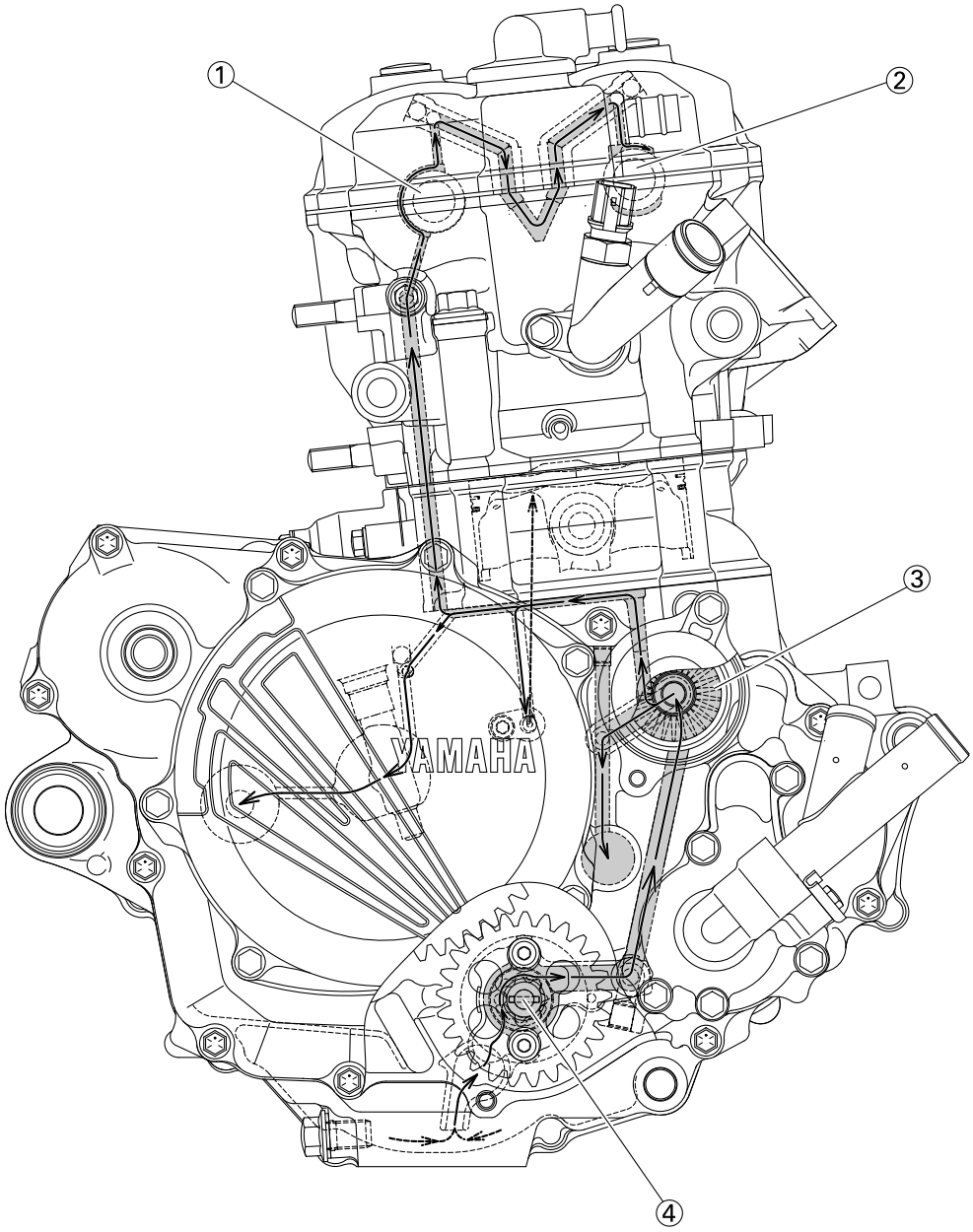
①
②
③
④
YAMAHA

1. Exhaust camshaft
2. Intake camshaft
3. Oil filter element
4. Oil pump

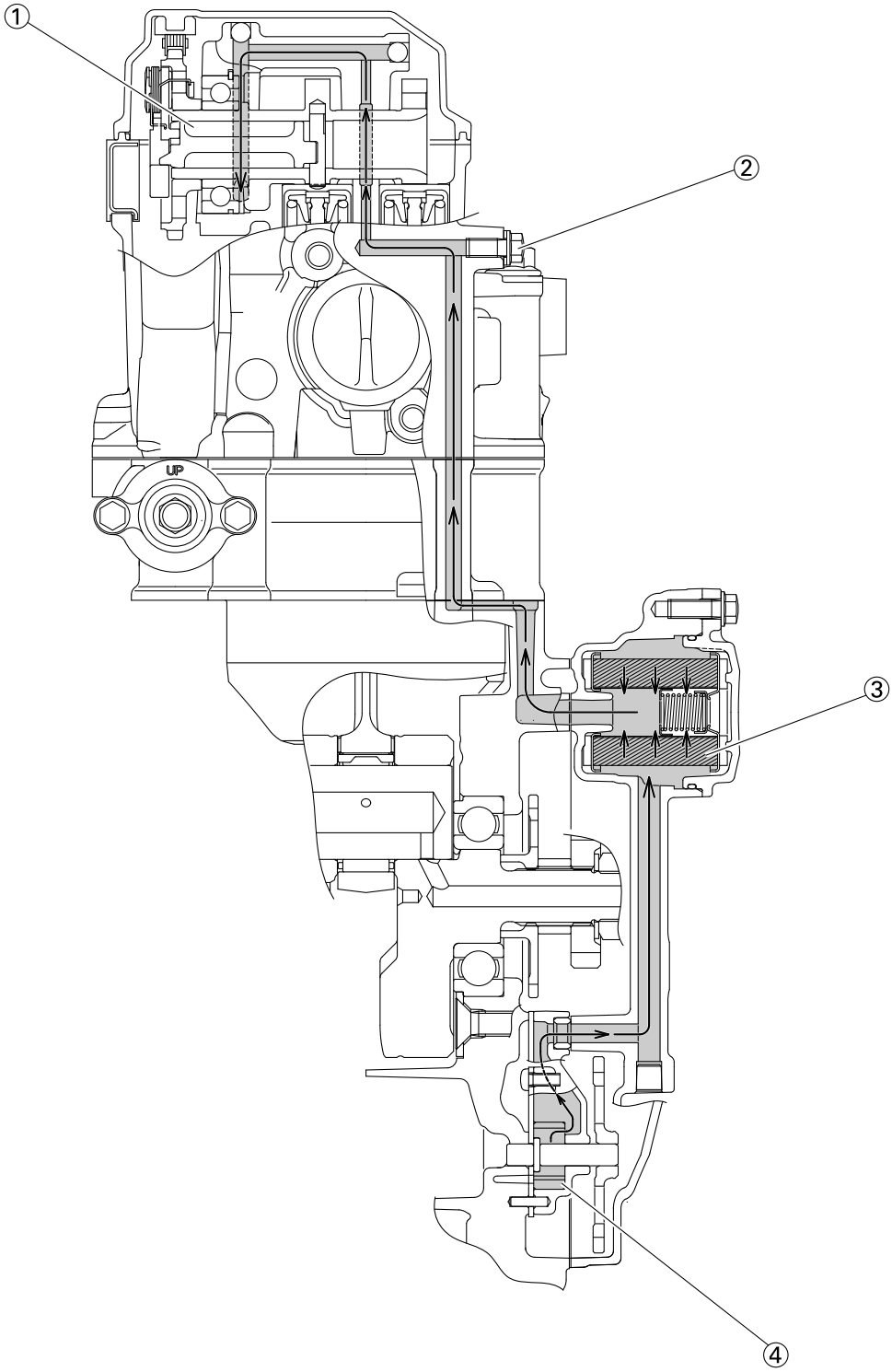
①
②
③
④
UP

1. Camshaft
2. Oil pressure check bolt
3. Oil filter element
4. Oil pump

CABLE ROUTING DIAGRAM

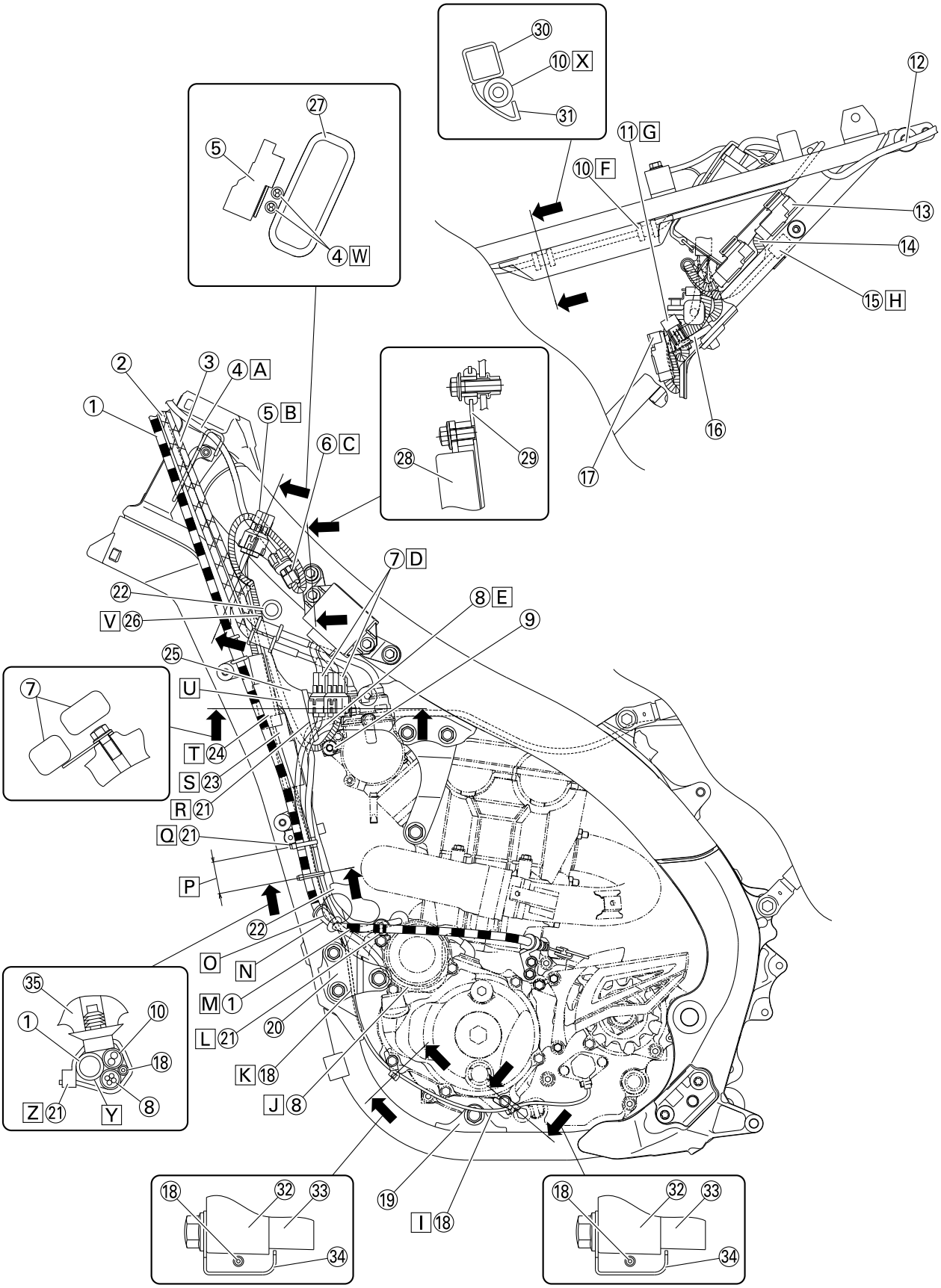

1. Clutch cable
2. Throttle cable (return)
3. Throttle cable (pull)
4. Engine stop switch lead
5. Coupler for connecting optional part
6. Engine stop switch coupler
7. Rectifier/regulator coupler
8. AC magneto lead
9. Starter knob/idle screw
10. Starter motor lead
11. Radiator fan fuse
12. Taillight
13. Headlight relay (yellow tape)
14. Starting circuit cut-off relay (no identification tape)
15. Diode
16. Holder plate
17. Left of the vehicle:radiator fan motor relay (blue tape)
    Right of the vehicle:main relay (red tape)
18. Neutral switch lead
19. Engine bracket
20. Front engine bracket
21. Plastic locking tie
22. Radiator hose
23. Neutral switch coupler
24. Crankshaft position sensor coupler
25. Tension arm
26. Wire harness
27. Tank rail
28. Rectifier/regulator
29. Rectifier/regulator bracket
30. Rear frame
31. Side cover 5
32. Crankcase cover
33. Crankcase
34. Lead holder
35. Frame

A. Pass the engine stop switch lead between the frame and the cable holder.
B. Insert the coupler for connecting optional part into the connector, and fix it to the bracket.
C. Insert and fix the engine stop switch coupler to the bracket.
D. Insert and fix the rectifier/regulator coupler to the bracket.
E. Pass the AC magneto lead to the front of the vehicle beyond the starter knob/idle screw and to the rear of the vehicle beyond the radiator. No pinch is allowed between the radiator and the tension arm.
F. Place the rear grommet of the starter motor lead matching the rear end of the side cover.
G. Insert the radiator fan motor fuse into the protrusion of the holder plate.
H. Place the diode on top of the rear fender on the inner side of the rear frame.
I. Bring the neutral switch lead into line with the crankcase cover with no sag allowed.
J. Route the AC magneto lead under the starter clutch cover.
K. Pass the neutral switch lead to the inside of the front engine bracket (the side of the vehicle).
L. Insert the plastic locking tie into the bracket hole and clamp the clutch cable. Clamp it so that the lock of the plastic locking tie faces downward, and then cut off the end of the plastic locking tie.
M. Pass the clutch cable with no downward sag allowed.
N. Place the grommet of the clutch cable so that it contacts the radiator hose. Route the clutch cable outside the neutral switch lead, AC magneto lead and starter motor lead.
O. Route each lead so that the leads are not pinched between the radiator hose and the frame.
P. 40 mm (1.57 in)
Q. Clamp the clutch cable, AC magneto lead, neutral switch lead and starter motor lead by the plastic locking tie. Make sure that they are clamped at the positioning tapes in the clutch cable and the starter motor lead. Make the lock on the plastic locking tie face the front of the vehicle, and cut the end.
R. Clamp the starter motor lead to the inside of the tension arm with a plastic locking tie. Clamp it so that the lock of the plastic locking tie faces upward and outward, and do not cut off the end of the plastic locking tie. Route the lead so that there is no slack at the bottom from the clamp position onwards.
S. After connecting the neutral switch coupler, attach the coupler cover.
T. After connecting the crankshaft position sensor coupler, attach the coupler cover.
U. Pass the rectifier/regulator lead to the inside of the tension arm (the side of the vehicle).
V. Pass the main harness to the front of the radiator hose (the front of the vehicle), and to the inside of the clutch cable (the side of the vehicle).
W. Pass the engine stop switch lead between the coupler for connecting optional part and the tank rail, with the lead on the main harness side facing the top of the vehicle.
X. Insert the starter motor lead completely into the end of the side cover 5.
Y. Clamp the clutch cable at the front of the lead (the front of the vehicle).
Z. Insert the clip of the plastic locking tie into the frame. Face the lock of the plastic locking tie forward, and then cut off the end.

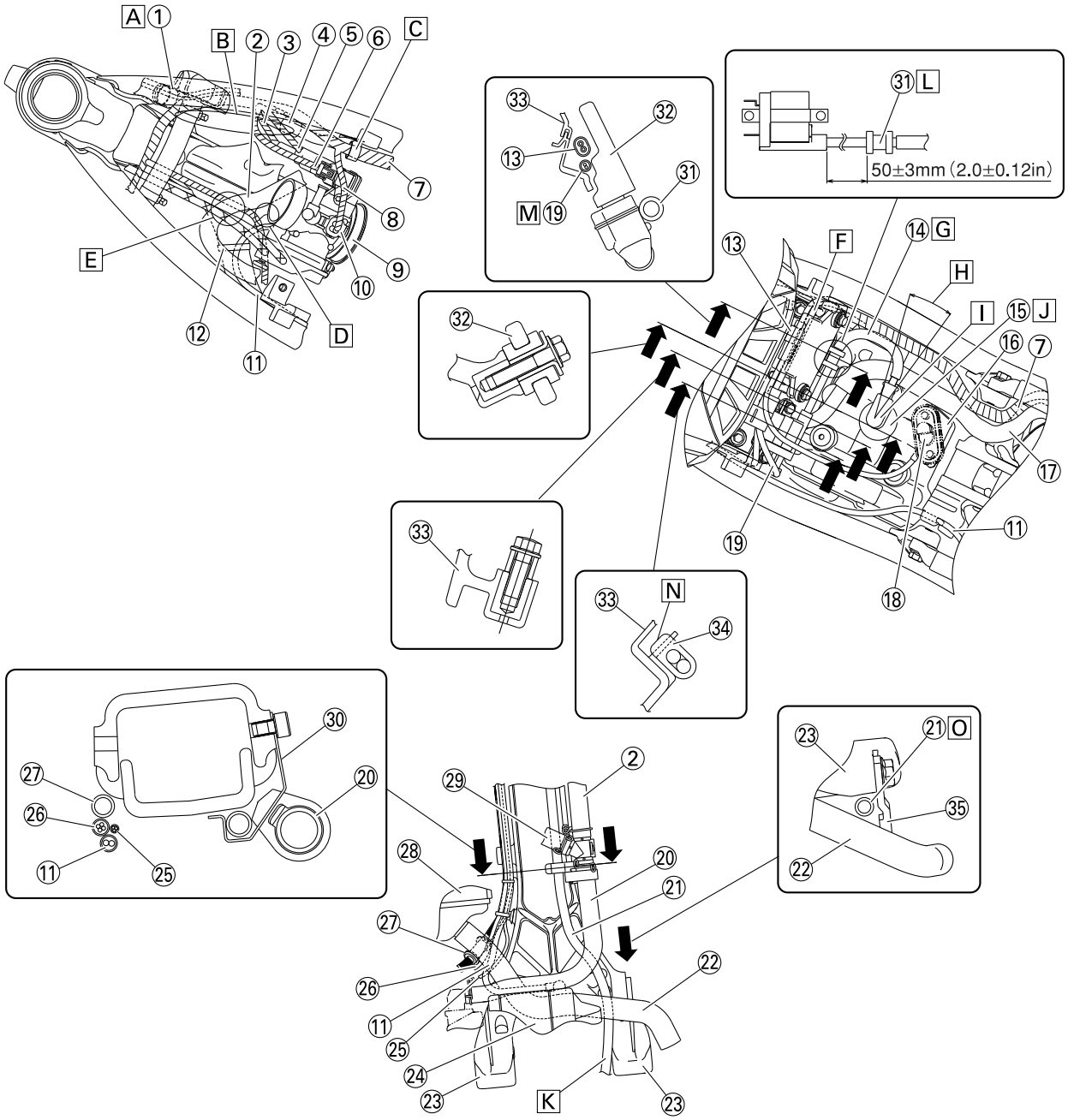
A 1
B 2 3 4 5 6 C
7
8
9
10
11
12
D
E
33
32
13
31
M 19
31 L
50±3mm (2.0±0.12in)
13
F
14 G
H
I
15 J
16
7
17
11
19
18
32
33
33
N
34
30
27
26
11
25
20
2
29
28
20
21
27
26
11
25
24
23
K
22
23
23
21 O
35
22

1. Clamp
2. Cylinder head breather hose
3. Throttle position sensor lead
4. Joint coupler
5. Intake air temperature sensor coupler
6. Intake air pressure sensor lead
7. Wire harness
8. Injector lead
9. Throttle body
10. Injector coupler
11. Starter motor lead
12. Plastic band
13. Fuel sender coupler
14. High tension cord
15. Spark plug cap
16. Cylinder head cover
17. Fuel hose
18. Fuel sender
19. Sub-wire harness
20. Crankcase breather hose
21. Radiator breather hose
22. Radiator hose
23. Down tube
24. Starter motor
25. Neutral switch lead
26. AC magneto lead
27. Clutch cable
28. Radiator
29. Air filter case breather hose
30. Breather hose clamp
31. Grommet (high tension cord)
32. ECU
33. Air filter case
34. Sub-wire harness coupler
35. Engine bracket

A. Fix the wire harness, clutch switch lead and start switch lead by the plastic clamp, and insert the projection of the plastic clamp into the hole in the sheet metal of the radiator.
B. Route each lead so that the leads are not pinched between the tank rail and air filter joint.
C. Insert the projection of the wire harness into the hole in the frame.
D. Route the cylinder head breather hose without it crossing the starter motor lead.
E. Pass the cylinder head breather hose between the throttle cable and rectifier/regulator lead.
F. Connect the sub-wire harness to the wire harness.
G. Pass the high tension cord above the fuel hose.
H. ±10°
I. Install the spark plug cap with this facing the right of the vehicle.
J. Push the spark plug cap home, where there shall be no gap between it and the cylinder head cover.
K. Pass the radiator breather hose between the down tubes.
L. Apply adhesive to the slit and inside of the grommet, and then fix the grommet according to the specified dimensions.
M. Pass the sub-wire harness between the ECU and the air filter case.
N. Insert the coupler of the sub-wire harness into the rib of the air filter case.
O. Route the radiator breather hose through between the radiator hose, down tube and engine bracket.

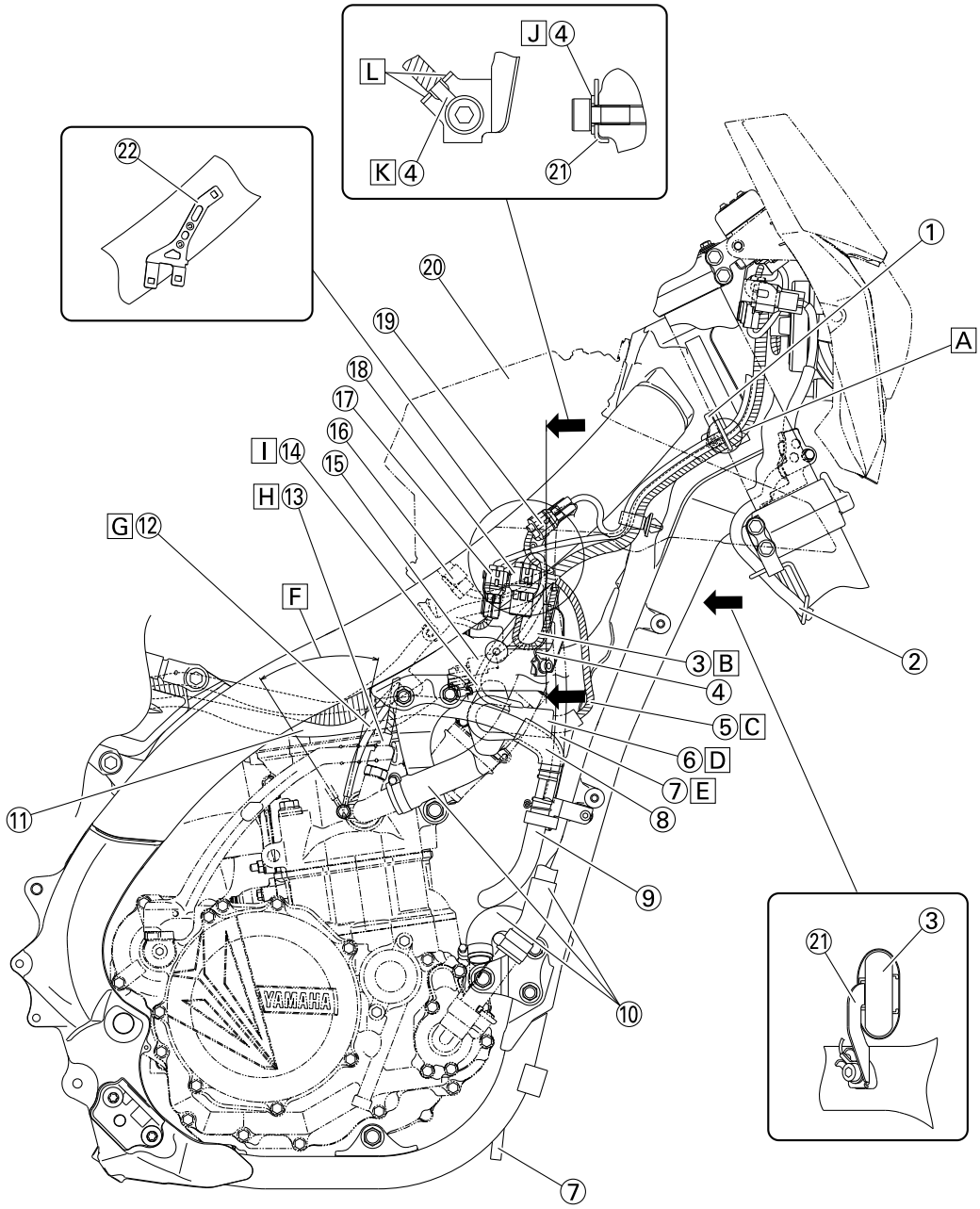
J ④
L
K ④
㉑
㉒
①
A
⑳
⑲
⑱
⑰
⑯
I ⑭
⑮
H ⑬
G ⑫
F
③ B
④
⑤ C
⑥ D
⑦ E
⑧
⑪
⑨
⑩
②
③
㉑
⑦
YAMAHA

1. Cable guide
2. Speed sensor lead
3. Joint coupler
4. Ground lead
5. Throttle position sensor lead
6. Throttle position sensor coupler
7. Radiator breather hose
8. Cylinder head breather hose
9. Crankcase breather hose
10. Radiator hose
11. Fuel hose
12. Engine ground lead
13. Coolant temperature sensor coupler
14. Radiator fan motor lead
15. Intake air pressure sensor coupler
16. Intake air temperature sensor coupler
17. Start switch coupler
18. Radiator fan motor coupler
19. Clutch switch coupler
20. Air filter case
21. Plate
22. Bracket

A. Pass the wire harness under the start switch lead and clutch switch lead.
B. Insert and fix the joint coupler to the plate. After fixing it, attach the cover.
C. Pass the throttle position sensor lead to the outside of the tension arm (the outside of the vehicle).
D. After connecting the throttle position sensor coupler, attach the cover.
E. Pass the radiator breather hose to the outside of the tension arm and the throttle position sensor lead (the outside of the vehicle), and to the inside of the radiator hose (the side of the vehicle).
F. 45°
G. Install the engine ground lead within a range of 45° from a location where it will not run over the step difference of the radiator hose joint. Both sides of the engine ground lead terminal can be used.
H. Attach the coupler cover to the coolant temperature sensor coupler.
I. Pass the radiator fan motor lead to the inside of the tension arm (the side of the vehicle).
J. Install the ground lead terminal between the plate and the bolt.
K. Fix the ground lead terminal to the detent in the plate. For the ground lead terminal, either side will do.
L. Detent

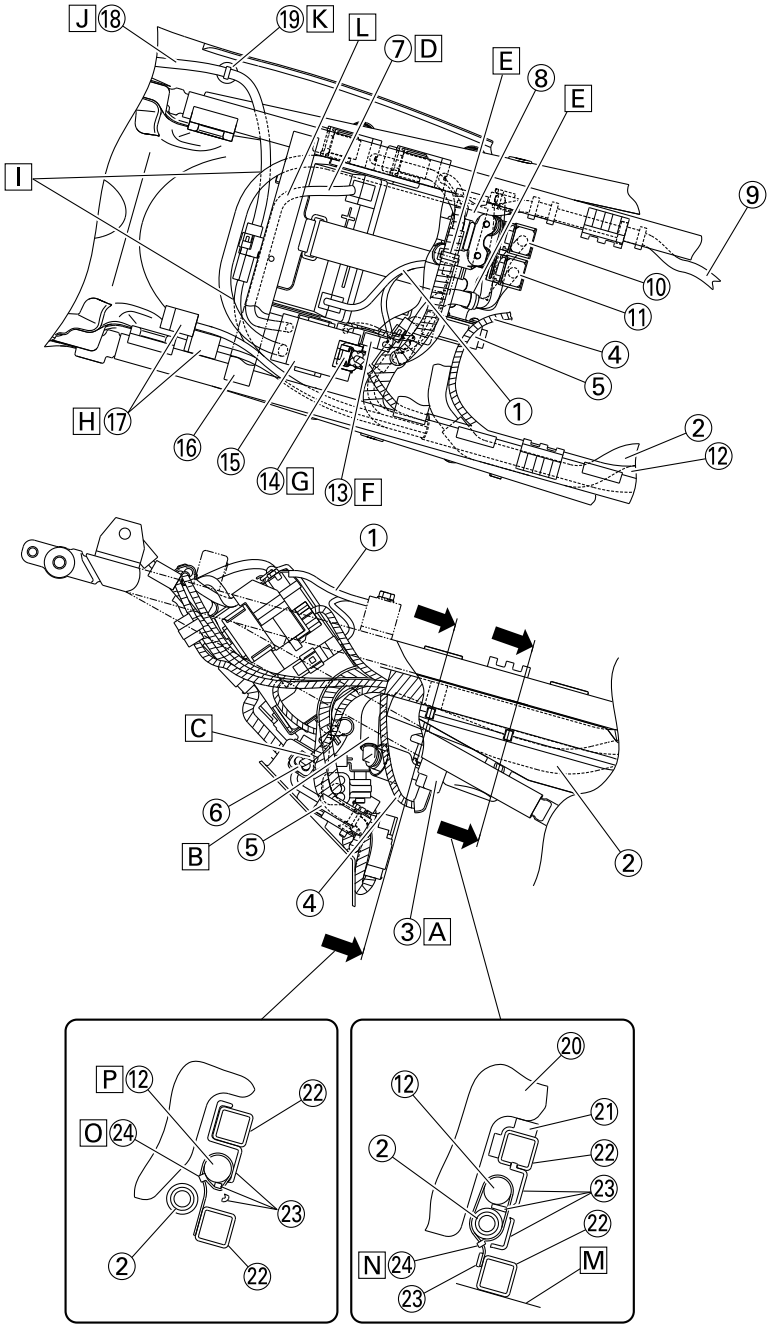
J ⑱
⑲ K
L
⑦ D
E
⑧
E
I
⑨
⑩
⑪
④
⑤
①
H ⑰
⑯
⑮
⑭ G
⑬ F
②
⑫
①
C
⑥
B
⑤
④
③ A
②
P ⑫
O ㉔
㉒
㉓
②
㉒
⑳
⑫
㉑
②
㉒
㉓
㉒
N ㉔
M
㉓

1. Battery negative lead
2. Fuel hose
3. Fuel pump coupler
4. Fuel pump lead
5. Resistor
6. Resistor coupler
7. Battery positive lead
8. Lean angle sensor
9. Starter motor lead
10. Radiator fan motor relay (blue tape)
11. Main relay (red tape)
12. Wire harness
13. Ground lead coupler
14. Starter relay coupler
15. Starter relay
16. Cross member
17. Diode
18. Taillight lead
19. Clamp
20. Fuel tank
21. Damper
22. Rear frame
23. Side cover 6
24. Plastic locking tie

A. After connecting the fuel pump coupler, attach the coupler cover.
B. Pass the fuel hose to the front of the battery.
C. Route the resistor lead to the outside of the leads.
D. Connect the battery positive lead to the starter relay terminal (in the left side of the vehicle).
E. Insert the protruding end of the wire harness into the battery bracket hole and holder plate hole.
F. After connecting the negative lead coupler, place it on the right side of the battery.
G. After installing the plastic cover to the starter relay, connect the starter relay coupler.
H. Route the diode under the cross member and place it on top of the rear fender.
I. Secure the two ends of the taillight coupler with the starter motor lead.
J. Route the taillight lead so that it does not slack at the rear of the vehicle.
K. Clamp the taillight lead and insert the clip into the rear fender. Clamp it so that the lock faces inward, and then cut off the excess end.
L. Route the battery positive lead under the cross member.
M. Lower end of the rear frame
N. Clamp it so that the lock of the plastic locking tie faces downward, insert the end into the rear frame and side cover 6, and then cut off the excess end. After cutting off the excess end, make sure that the plastic locking tie does not protrude from the lower end of the rear frame.
O. Clamp it so that the lock of the plastic locking tie faces downward, and then pass the end between the fuel hose and rear frame.
P. Clamp the wire harness at the position of the white tape.

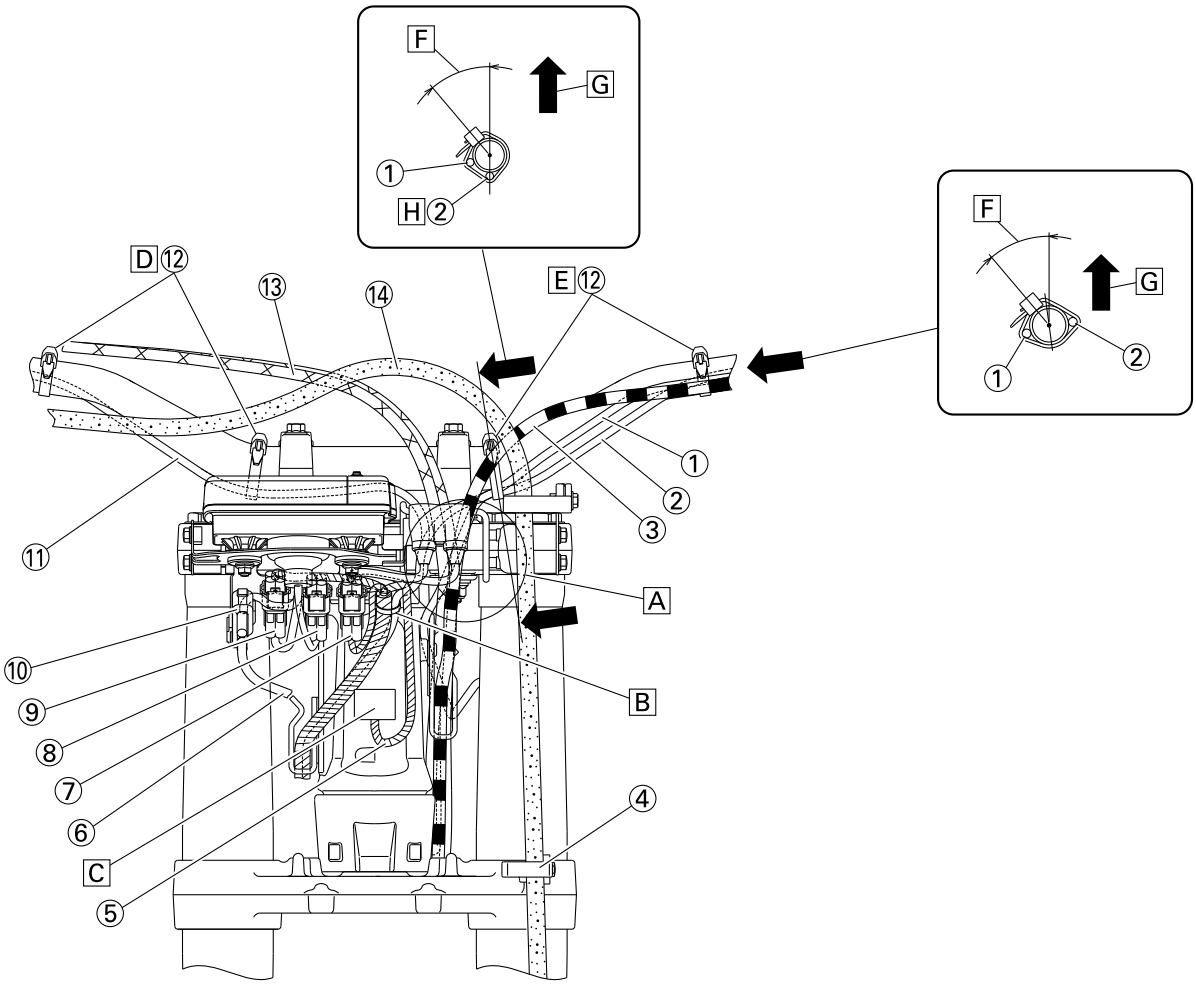
F
G
①
H ②
F
G
①
②
D ⑫
⑬
⑭
E ⑫
①
②
③
⑪
A
⑩
⑨
⑧
⑦
⑥
C
⑤
B
④

1. Clutch switch lead
2. Engine stop switch lead
3. Clutch cable
4. Brake hose guide
5. Headlight lead
6. Speed sensor lead
7. Indicator light coupler
8. Meter assembly optional switch coupler
9. Meter assembly coupler
10. Speed sensor coupler
11. Start switch lead
12. Plastic band
13. Throttle cable
14. Front brake hose

A. Route the throttle cable, clutch cable, clutch switch lead, engine stop switch lead and start switch lead between the cable guide of the meter bracket and handle crown. The cables and leads may be routed in any order.
B. Clamp the wire harness, clutch switch lead and start switch lead to the meter bracket. The clamp shall be located at a position where there is no slack with the handle turned fully to the left.
C. Connect the headlight lead to the headlight.
D. Clamp the start switch lead to the handlebar by the plastic band.
E. Clamp the engine stop switch lead and clutch switch lead to the handlebar by the plastic band.
F. 40°±10°
G. Vertical direction
H. Pass the engine stop switch lead under the handlebar.

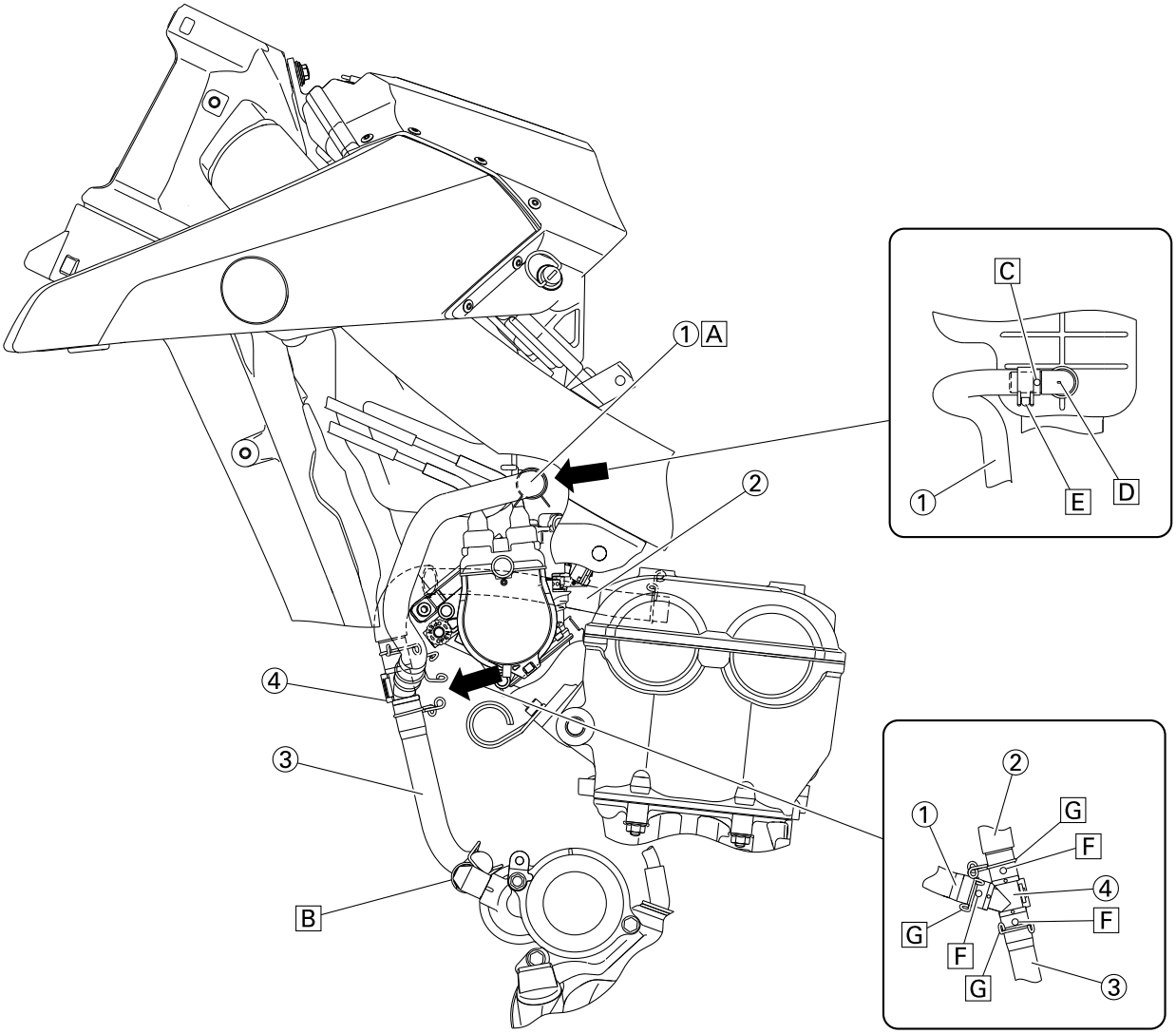
1 A
2
3
4
B
C
D
E
1
2
1
G
F
4
F
G
F
G
3

1. Breather hose 3 (air filter breather hose)
2. Breather hose 1 (cylinder head breather hose)
3. Breather hose 2 (crankcase breather hose)
4. Joint pipe

A. Pass the breather hose 3 to the outside the throttle cable.
B. Install the two breather hoses so that the yellow paint mark is pointing forwards.
C. Align the white paint mark to the protruding portion of the pipe to install breather hose 3.
D. Protruding portion of the pipe
E. Align the end with the paint mark of the breather hose 3 to the end of the clip to install the clip.
F. Align with the blue paint mark and protruding portion of the joint pipe to install the breather hose.
G. Intall the clip as shown.

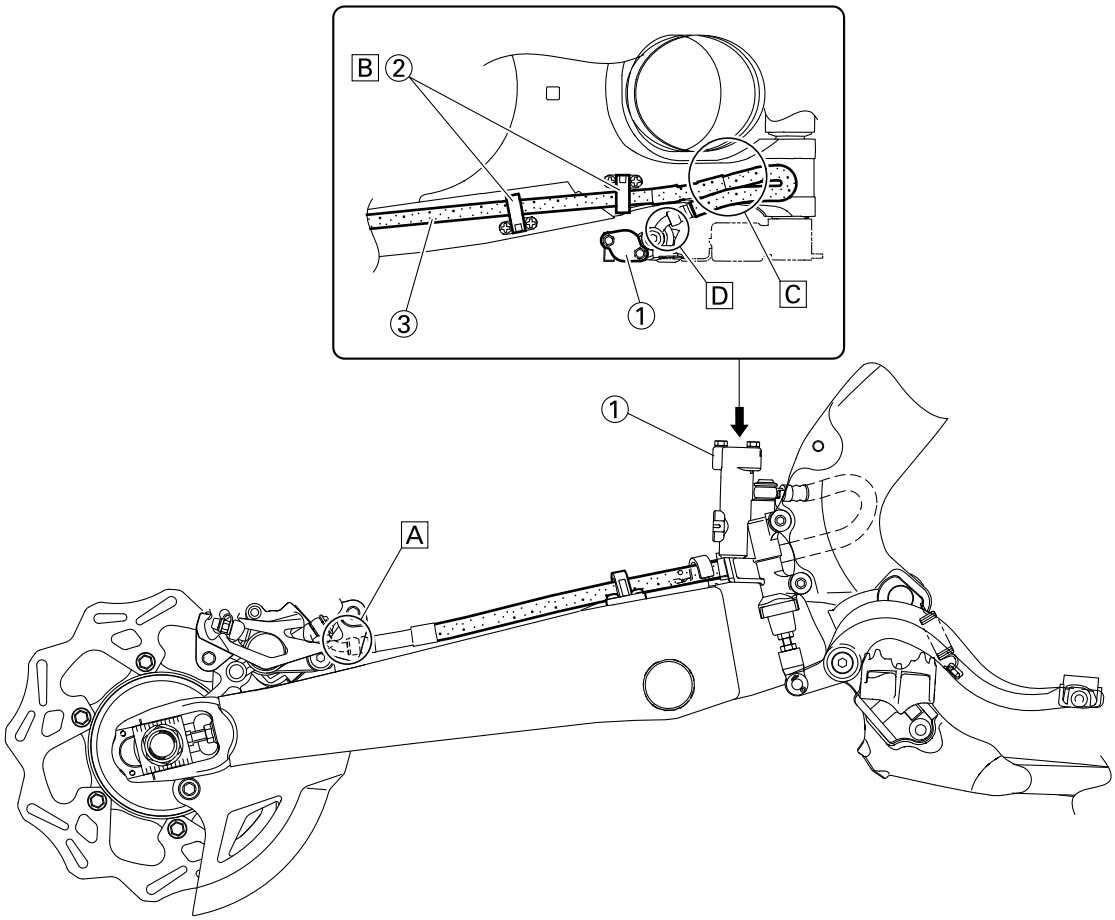
B
2
3
1
D
C
1
A

1. Brake master cylinder
2. Brake hose holder
3. Brake hoses

A. While installing the brake hose, direct a bend in its pipe portion as shown, and bring it into contact with the projection on the brake caliper.
B. Pass the brake hose into the brake hose holders.
C. If the brake hose interferes with the rear shock absorber, correct its twist.
D. While installing the brake hose, direct a bend in its pipe portion as shown, and bring it into contact with the projection on the brake master cylinder.

PERIODIC CHECKS AND ADJUSTMENTS

PERIODIC MAINTENANCE

INTRODUCTION

This chapter includes all information necessary to perform recommended checks and adjustments. If followed, these preventive maintenance procedures will ensure more reliable vehicle operation, a longer service life and reduce the need for costly overhaul work. This information applies to vehicles already in service as well as to new vehicles that are being prepared for sale. All service technicians should be familiar with this entire chapter.

PERIODIC MAINTENANCE CHART FOR THE EMISSION CONTROL SYSTEM

TIP

- From 4200 mi (7000 km) or 9 months, repeat the maintenance intervals starting from 1800 mi (3000 km) or 3 months.
- Items marked with an asterisk should be performed by a Yamaha dealer as they require special tools, data and technical skills.

NO.		ITEM	CHECKS AND MAINTENANCE JOBS	INITIAL	ODOMETER READINGS	
				600 mi (1000 km) or 1 month	1800 mi (3000 km) or 3 months	3000 mi (5000 km) or 6 months
1	*	**Fuel line**	• Check fuel hoses for cracks or damage. • Replace if necessary.	√	√	√
2		**Spark plug**	• Check condition. • Adjust gap and clean.	√	√	√
3	*	**Valve clearance**	• Check and adjust valve clearance when engine is cold.	√		√
4	*	**Air filter element**	• Clean with solvent and apply foam air-filter oil or equivalent oil. • Replace if necessary.	√	√	√
5	*	**Breather system**	• Check ventilation hose for cracks or damage and drain any deposits.	√	√	√
			• Replace.	Every 2 years		
6	*	**Fuel injection**	• Adjust engine idling speed.	√	√	√
7		**Exhaust system**	• Check for leakage. • Tighten if necessary. • Replace gasket(s) if necessary.	√	√	√
8		**Engine oil**	• Change (warm engine before draining).	√	√	√
9		**Engine oil filter element**	• Replace.	√	√	√
10		**Engine oil strainer**	• Clean.	√	√	√

GENERAL MAINTENANCE AND LUBRICATION CHART

NO.		ITEM	CHECKS AND MAINTENANCE JOBS	INITIAL	ODOMETER READINGS	
				600 mi (1000 km) or 1 month	1800 mi (3000 km) or 3 months	3000 mi (5000 km) or 6 months
1		**Clutch**	• Check operation. • Adjust or replace cable.	√	√	√
2	*	**Cooling system**	• Check hoses for cracks of damage. • Replace if necessary.	√	√	√
			• Replace with ethylene glycol anti-freeze coolant every 1 year.	Every 1 year		
3	*	**Spark arrester**	• Clean.			√
4	*	**Front brake**	• Check operation, fluid level, and for fluid leakage. • Replace brake pads if necessary.	√	√	√
			• Replace brake fluid every 1 year.	Every 1 year		
5	*	**Rear brake**	• Check operation, fluid level, and for fluid leakage. • Replace brake pads if necessary.	√	√	√
			• Replace brake fluid every 1 year.	Every 1 year		
6	*	**Brake hoses**	• Check for cracks or damage.		√	√
			• Replace.	Every 4 years		
7	*	**Wheels**	• Check runout, spoke tightness and for damage. • Tighten spokes if necessary.	√	√	√
8	*	**Tires**	• Check tread depth and for damage. • Replace if necessary. • Check air pressure. • Correct if necessary.	√	√	√
9	*	**Wheel bearings**	• Check bearings for smooth operation. • Replace if necessary.	√	√	√
10	*	**Swingarm pivot bearings**	• Check bearing assemblies for looseness. • Moderately repack with lithium-soap-based grease.	√	√	√
11		**Drive chain**	• Check chain slack/alignment and condition. • Adjust and lubricate chain with a special O-ring chain lubricant thoroughly.	Every ride		
12	*	**Steering bearings**	• Check bearing assemblies for looseness. • Moderately repack with lithium-soap-based grease every 1200 mi (2000 km) or 12 months (whichever comes first).	√	√	√

NO.		ITEM	CHECKS AND MAINTENANCE JOBS	INITIAL	ODOMETER READINGS	
				600 mi (1000 km) or 1 month	1800 mi (3000 km) or 3 months	3000 mi (5000 km) or 6 months
13		**Brake and clutch lever pivot shafts**	• Apply lithium-soap-based grease (all-purpose grease) lightly.	√	√	√
14		**Brake pedal pivot shafts**	• Apply lithium-soap-based grease (all-purpose grease) lightly.	√	√	√
15		**Sidestand pivot**	• Check operation. • Apply lithium-soap-based grease (all-purpose grease) lightly.	√	√	√
16	*	**Front fork**	• Check operation and for oil leakage. • Replace if necessary.		√	√
17	*	**Shock absorber assembly**	• Check operation and for oil leakage. • Replace if necessary.		√	√
18	*	**Rear suspension link pivots**	• Apply molybdenum disulfide grease lightly.		√	√
19	*	**Control cables**	• Apply Yamaha chain and cable lube or engine oil 10W-30 thoroughly.	√	√	√
20	*	**Throttle grip housing and cable**	• Check operation and free play. • Adjust the throttle cable free play if necessary. • Lubricate the throttle grip housing and cable.	√	√	√
21	*	**Chassis fasteners**	• Check all chassis fitting and fasteners. • Correct if necessary.	√	√	√
22		**Battery**	• Check terminal for looseness and corrosion.		√	√

TIP

- The air filter needs more frequent service if you are riding in unusually wet or dusty areas.
- Hydraulic brake service
  - After disassembling the brake master cylinders and calipers, always change the fluid. Regularly check the brake fluid levels and fill the reservoirs as required.
  - Every two years replace the internal components of the brake master cylinders and calipers, and change the brake fluid.
  - Replace the brake hoses every four years and if cracked or damaged.

MAINTENANCE INTERVALS FOR COMPETITION USE

TIP

- The following schedule is intended as a general guide to maintenance and lubrication. Bear in mind that such factors as weather, terrain, geographical location, and individual usage will alter the required maintenance and lubrication intervals. If you are a doubt as to what intervals to follow in maintaining and lubricating your machine, consult your Yamaha dealer.
- Periodic inspection is essential in making full use of the machine performance. The service life of the parts varies substantially according to the environment in which the machine runs (e.g., rain, dirt, etc.). Therefore, earlier inspection is required by reference to the list below.

ITEM	After break-in	Every race	Every third (or 500 km)	Every fifth (or 1,000 km)	As required	Remarks
ENGINE OIL						
Replace	●			●		
VALVES						
Check the valve clearances	●		●			The engine must be cold.
Inspect				●		Check the valve seats and valve stems for wear.
Replace					●	
VALVE SPRINGS						
Inspect				●		Check the free length and the tilt.
Replace					●	
VALVE LIFTERS						
Inspect				●		Check for scratches and wear.
Replace					●	
CAMSHAFTS						Inspect the camshaft surface.
Inspect				●		Inspect the decompression system.
Replace					●	
CAMSHAFT SPROCKETS						
Inspect				●		Check for wear on the teeth and for damage.
Replace					●	
PISTON						Inspect crack.
Inspect				●	●	Inspect carbon deposits and eliminate them.
Clean					●	
Replace					●	It is recommended that the piston pin and ring are also replaced at the same time.
PISTON RING						
Inspect				●		Check ring end gap.
Replace				●	●	

ITEM	After break-in	Every race	Every third (or 500 km)	Every fifth (or 1,000 km)	As required	Remarks
PISTON PIN						
Inspect				●		
Replace					●	
CYLINDER HEAD						Inspect carbon deposits and eliminate them.
Inspect and clean				●		Change gasket.
CYLINDER						
Inspect and clean				●		Inspect score marks. Inspect wear.
Replace					●	
CLUTCH						
Inspect and adjust	●	●				Inspect housing, friction plate, clutch plate and spring.
Replace					●	
TRANSMISSION						
Inspect					●	
Replace bearing					●	
SHIFT FORK, SHIFT CAM, GUIDE BAR						
Inspect					●	Inspect wear.
ROTOR NUT						
Retighten	●			●		
MUFFLER						
Inspect and re-tighten	●	●				
Clean				●		
Replace					●	
CRANK						
Inspect and clean				●	●	
THROTTLE BODY						
Inspect					●	
SPARK PLUG						
Inspect and clean	●		●			
Replace					●	
DRIVE CHAIN						Use chain lube.
Lubricate, slack, alignment	●	●				Chain slack: 50–60 mm (1.97–2.36 in)
Replace					●	

ITEM	After break-in	Every race	Every third (or 500 km)	Every fifth (or 1,000 km)	As required	Remarks
COOLING SYSTEM						
Check coolant level and leakage	●	●				
Check radiator cap operation					●	
Replace coolant					●	Every two years
Inspect hoses		●				
OUTSIDE NUTS AND BOLTS						
Retighten	●	●				Refer to “STARTING AND BREAK-IN” on page 1-32.
AIR FILTER						
Clean and lubricate	●	●				Use foam air-filter oil or equivalent oil.
Replace					●	
OIL FILTER						
Replace	●			●		
ENGINE GUARD						
Replace					●	Breakage
FRAME						
Clean and inspect	●	●				
FUEL TANK, FUEL PUMP						
Clean and inspect	●		●			
FUEL HOSE						
Inspect					●	
Replace					●	Every four years

ITEM	After break-in	Every race	Every third (or 500 km)	Every fifth (or 1,000 km)	As required	Remarks
BRAKES						
Adjust lever position and pedal height	●	●				
Lubricate pivot point	●	●				
Check brake disc surface	●	●				
Check fluid level and leakage	●	●				
Retighten brake disc bolts, caliper bolts, master cylinder bolts and union bolts	●	●				
Replace pads					●	
Replace brake fluid					●	Every one year
FRONT FORKS						
Inspect and adjust	●	●				
Replace oil	●			●		Suspension oil “S1”
Replace oil seal					●	
FRONT FORK OIL SEAL AND DUST SEAL						
Clean and lube	●	●				Lithium-soap-based grease
PROTECTOR GUIDE						
Replace					●	
REAR SHOCK ABSORBER					(After rain ride)	
Inspect and adjust	●	●				
Lube			●		●	Molybdenum disulfide grease
Retighten	●	●				
DRIVE CHAIN GUARD AND ROLLERS						
Inspect	●	●				
DRIVE CHAIN STOPPER						
Inspect					●	

ITEM	After break-in	Every race	Every third (or 500 km)	Every fifth (or 1,000 km)	As required	Remarks
SWINGARM						
Inspect, lube and retighten	●	●				Molybdenum disulfide grease
RELAY ARM, CONNECTING ROD						
Inspect, lube and retighten	●	●				Molybdenum disulfide grease
SIDESTAND						
Lubricate					●	Lithium-soap-based grease
STEERING HEAD						
Inspect free play and retighten	●	●				
Clean and lube				●		Lithium-soap-based grease
Replace bearing					●	
TIRE, WHEELS						
Inspect air pressure, wheel run-out, tire wear and spoke looseness	●	●				
Retighten sprocket bolt	●	●				
Inspect bearings			●			
Replace bearings					●	
Lubricate			●			Lithium-soap-based grease
THROTTLE, CONTROL CABLE						
Check routing and connection	●	●				
Lubricate	●	●				Yamaha cable lube or SAE 10W-30 motor oil

PRE-OPERATION INSPECTION AND MAINTENANCE

Before riding for break-in operation, practice or a race, make sure the machine is in good operating condition.
Before using this machine, check the following points.

GENERAL INSPECTION AND MAINTENANCE

ITEM	inspect	Page
Coolant	Check that coolant is filled up to the radiator cap. Check the cooling system for leakage.	3-10 – 12
Fuel	Check that a fresh gasoline is filled in the fuel tank. Check the fuel line for leakage.	1-32
Engine oil	Check that the oil level is correct. Check the crankcase and oil line for leakage.	3-16 – 18
Gear shifter and clutch	Check that gears can be shifted correctly in order and that the clutch operates smoothly.	3-12 – 13
Throttle grip/Housing	Check that the throttle grip operation and free play are correctly adjusted. Lubricate the throttle grip and housing, if necessary.	3-13 – 14
Brakes	Check the play of front brake and effect of front and rear brake.	3-24 – 30
Drive chain	Check drive chain slack and alignment. Check that the drive chain is lubricated properly.	3-30 5-68 – 69
Wheels	Check for excessive wear and tire pressure. Check for loose spokes and have no excessive play.	3-35 – 36
Steering	Check that the handlebar can be turned smoothly and have no excessive play.	3-36 – 37
Front forks and rear shock absorber	Check that they operate smoothly and there is no oil leakage.	3-31 – 35
Cables (wires)	Check that the clutch and throttle cables move smoothly. Check that they are not caught when the handlebars are turned or when the front forks travel up and down.	—
Exhaust pipe	Check that the exhaust pipe is tightly mounted and has no cracks.	3-15 – 16
Rear wheel sprocket	Check that the rear wheel sprocket tightening bolt is not loose.	5-10 – 11
Lubrication	Check for smooth operation. Lubricate if necessary.	3-13 3-37 – 38
Bolts and nuts	Check the chassis and engine for loose bolts and nuts.	1-36 – 37
Lead connectors	Check that the AC magneto, ECU and ignition coil are connected tightly.	1-11 – 14
Settings	Is the machine set suitably for the condition of the racing course and weather or by taking into account the results of test runs before racing? Are inspection and maintenance completely done?	4-1 – 8

TIP

Perform usual maintenance enough so that, in the race course, a confirmation of that and simple setting adjustments may only be left, in order to get enough time to use effectively.

ENGINE

CHECKING THE COOLANT LEVEL

WARNING

If coolant seems hot, do not remove the radiator cap.

1. Stand the vehicle upright on a level surface.
2. Remove:
   - Radiator cap “1”

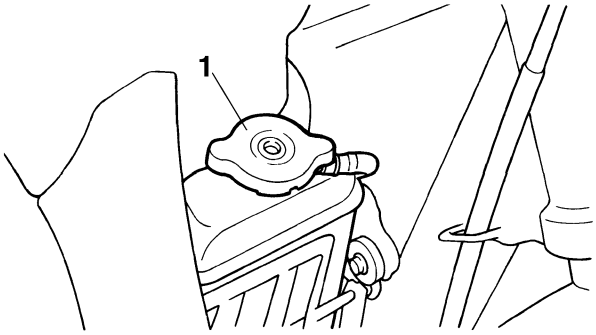

3. Check:
   - Coolant level
     Maximum level “a” or below → Add coolant up to the maximum level.

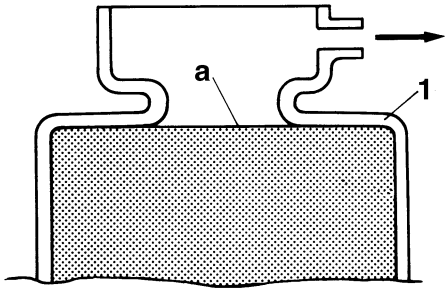

1. Radiator

NOTICE

- **Adding water instead of coolant lowers the antifreeze content. If, therefore, water is used instead of coolant, check, and if necessary, adjust the antifreeze concentration.**
- **Use only distilled water. However, if distilled water is not available, soft water may be used.**

4. Start the engine, warm this up for 3 minutes, and then stop it.
5. Check:
   - Coolant level

TIP

Before checking the coolant level, wait a few minutes until the coolant has settled.

CHECKING THE COOLING SYSTEM

1. Remove:
   - Seat
   - Side cover (left/right)
   - Air scoop (left/right)
     Refer to “GENERAL CHASSIS” on page 5-1.
   - Air filter case cover
     Refer to “THROTTLE BODY” on page 8-7.
2. Check:
   - Radiator
   - Radiator hoses
     Crack/damage → Replace.
     Refer to “RADIATOR” on page 7-1.
3. Install:
   - Air filter case cover
     Refer to “THROTTLE BODY” on page 8-7.
   - Air scoop (left/right)
   - Seat
   - Side cover (left/right)
     Refer to “GENERAL CHASSIS” on page 5-1.

CHANGING THE COOLANT

WARNING

If coolant seems hot, do not remove the radiator cap.

1. Place a container under the engine.
2. Remove:
   - Coolant drain bolt “1”

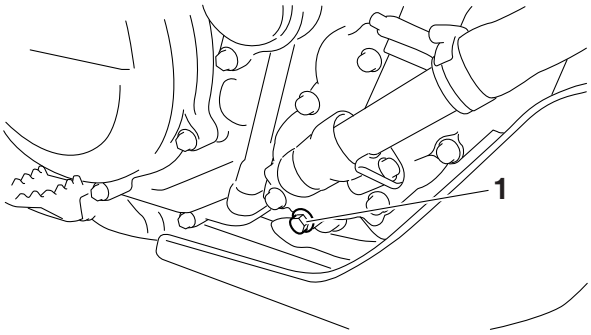

3. Remove:
   - Radiator cap
     Slowly loosen the radiator cap to drain coolant.

TIP

When the radiator cap is loosened, coolant will gush out transversely; therefore, bring the container near to the outlet.

4. Thoroughly flush the cooling system with clean tap water.

5. Install:
   - Copper washer New
   - Coolant drain bolt

Coolant drain bolt
10 Nm (1.0 m·kgf, 7.2 ft·lbf)

6. Pour coolant.

Recommended coolant
High quality ethylene glycol anti-freeze containing anti-corrosion for aluminum engine
Radiator capacity (including all routes)
1.00 L (1.06 US qt, 0.88 Imp.qt)
Coolant mixing ratio
1:1 (Coolant:Water)

WARNING

- **If coolant splashes in your eyes, thoroughly wash them with water and consult a doctor.**
- **If coolant splashes on your clothes, quickly wash it away with water and then with soap and water.**
- **If coolant is swallowed, induce vomiting and get immediate medical attention.**

NOTICE

- **Adding water instead of coolant lowers the antifreeze content of the coolant. If water is used instead of coolant check, and if necessary, correct the antifreeze concentration of the coolant.**
- **Use only distilled water. However, if distilled water is not available, soft water may be used.**
- **If coolant comes into contact with painted surfaces, immediately wash them with water.**
- **Do not mix different types of antifreeze.**

7. Install:
   - Radiator cap
8. Start the engine, warm this up for 3 minutes, stop it, and then wait for it to cool down.
9. Check:
   - Coolant level
     Refer to "CHECKING THE COOLANT LEVEL" on page 3-10.

CHECKING THE RADIATOR CAP

1. Check:
   - Seal (radiator cap) "1"
   - Valve and valve seat "2"

Crack/damage → Replace.
Exist fur deposits → Clean or replace.

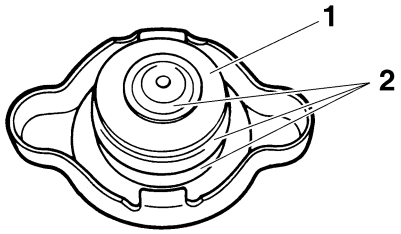

CHECKING THE RADIATOR CAP OPENING PRESSURE

1. Check:
   - Radiator cap opening pressure

▼▼▼▼▼▼▼▼▼▼▼▼▼▼▼▼▼▼▼▼▼▼▼▼▼▼▼▼▼▼▼▼▼▼

a. Install the radiator cap tester adapter "2" and the radiator cap tester "3" to the radiator cap "1," and activate the tester to check whether it can stay for 5 to 10 seconds within standard pressure values.

TIP

Before attaching the cap to the tester, apply water to its sealing surface.

Radiator cap opening pressure
107.9–137.3 kPa (1.08–1.37 kg/cm^2,15.6–19.9 psi)

No stay → Replace.

Radiator cap tester
90890-01325
Mityvac cooling system tester kit
YU-24460-A
Radiator cap tester adapter
90890-01352
Pressure tester adapter
YU-33984

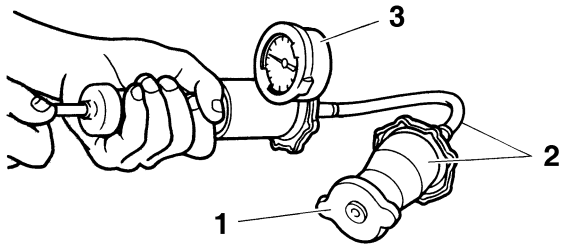

▲▲▲▲▲▲▲▲▲▲▲▲▲▲▲▲▲▲▲▲▲▲▲▲▲▲▲▲▲▲▲▲▲▲

CHECKING THE COOLANT CIRCULATORY SYSTEM FOR LEAKS

1. Check:
   - Coolant level
2. Install:
   - Radiator cap tester "1"
   - Adapter "2"

Radiator cap tester
90890-01325
Mityvac cooling system tester kit
YU-24460-A
Radiator cap tester adapter
90890-01352
Pressure tester adapter
YU-33984

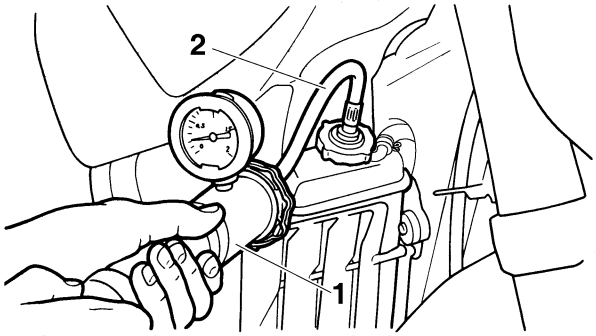

3. Activate the tester to apply the test pressure.

Test pressure value
196 kPa (1.96 kg/cm^2, 27.9 psi)

NOTICE

- **Do not apply such a high pressure as exceeds the test pressure.**
- **Make sure that a checkup after the cylinder head gasket is replaced is made after 3 minutes of warm-up.**
- **Make sure that coolant is filled up to the upper level beforehand.**

4. Check:
   - Pressure value
     No stay for 5 to 10 seconds at the test pressure value → Correct.
   - Radiator
   - Radiator hose connections
     Coolant leaks → Correct or replace.
   - Radiator hoses
     Bulges → Replace

WARNING

When the radiator cap tester is removed, coolant will spout; therefore, cover it with a cloth beforehand.

ADJUSTING THE CLUTCH LEVER FREE PLAY

1. Check:
   - Clutch lever free play "a"
     Out of specification → Regulate.

Clutch lever free play
7.0–12.0 mm (0.28–0.47 in)

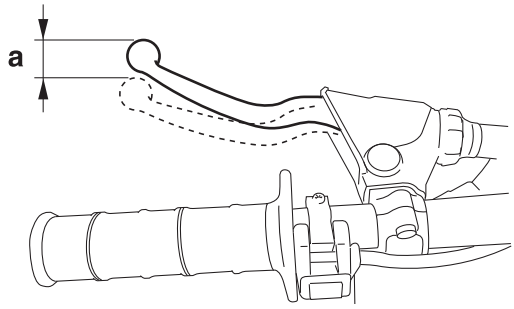

2. Adjust:
   - Clutch lever free play

▼▼▼▼▼▼▼▼▼▼▼▼▼▼▼▼▼▼▼▼▼▼▼▼▼▼▼▼▼▼▼▼▼▼

Handlebar side

a. Turn the adjuster "1" in direction "a" or "b" until the specified clutch lever free play is obtained.

Direction "a"
Clutch lever free play is increased.
Direction "b"
Clutch lever free play is decreased.

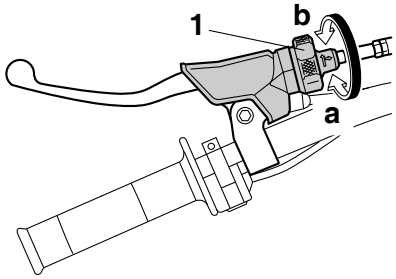

TIP

If the clutch lever free play cannot be obtained on the handlebar side, use the adjuster on the clutch cable side.

▲▲▲▲▲▲▲▲▲▲▲▲▲▲▲▲▲▲▲▲▲▲▲▲▲▲▲▲▲▲▲▲▲▲

▼▼▼▼▼▼▼▼▼▼▼▼▼▼▼▼▼▼▼▼▼▼▼▼▼▼▼▼▼▼▼▼▼▼

Clutch cable side

a. Slide the clutch cable cover.
b. Loosen the locknut "1".

c. Turn the adjuster “2” in direction “a” or “b” until the specified clutch lever free play is obtained.

Direction “a”
Clutch lever free play is increased.
Direction “b”
Clutch lever free play is decreased.

d. Tighten the locknut “1”.

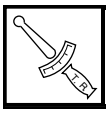	**Locknut** **4.0 Nm (0.40 m·kgf, 2.9 ft·lbf)**

e. Return the clutch cable cover to its original position.

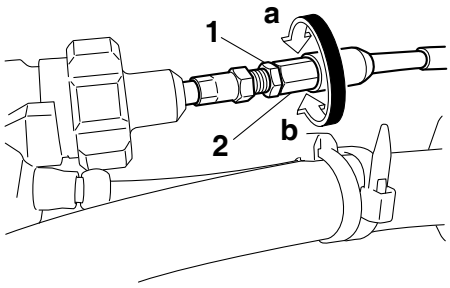

▲▲▲▲▲▲▲▲▲▲▲▲▲▲▲▲▲▲▲▲▲▲▲▲▲▲▲▲▲▲▲▲

ADJUSTING THE THROTTLE GRIP FREE PLAY

TIP

Prior to adjusting throttle grip free play, the engine idling speed should be adjusted.

1. Check:
   - Throttle grip free play “a”
     Out of specification → Regulate.

	**Throttle grip free play** **3.0–5.0 mm (0.12–0.20 in)**

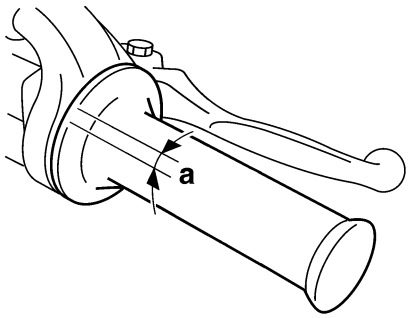

2. Adjust:
   - Throttle grip free play

▼▼▼▼▼▼▼▼▼▼▼▼▼▼▼▼▼▼▼▼▼▼▼▼▼▼▼▼▼▼▼▼

a. Loosen the locknut “1”.
b. Turn the adjuster “2” until the specified free play is obtained.

Direction “a”
Throttle grip free play is increased.
Direction “b”
Throttle grip free play is decreased.

c. Tighten the locknut.

WARNING

After adjusting the throttle grip free play, turn the handlebar to the right and to the left to ensure that this does not cause the engine idling speed to change.

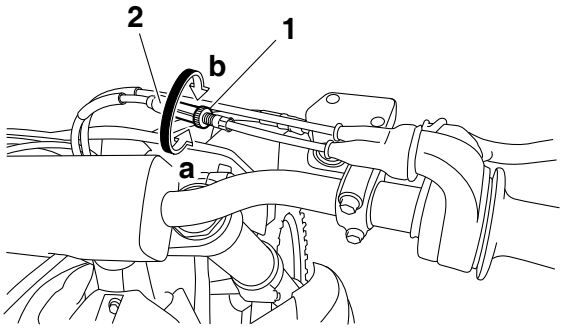

▲▲▲▲▲▲▲▲▲▲▲▲▲▲▲▲▲▲▲▲▲▲▲▲▲▲▲▲▲▲▲▲

LUBRICATING THE THROTTLE CABLE

1. Remove:
   - Cover (throttle cable cap) “1”
   - Cover (grip cap) “2”
   - Throttle grip cap “3”

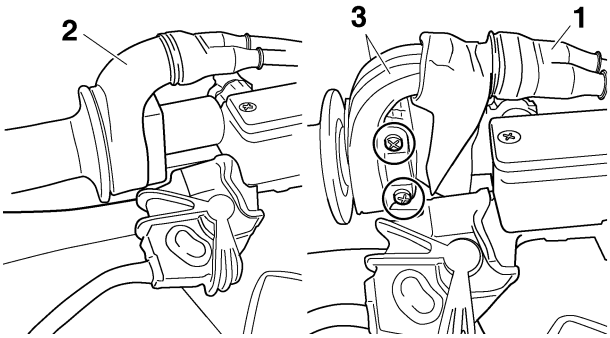

2. Lubricate:
   • Throttle cable end “a”

	Recommended lubricant **Lithium-soap-based grease**

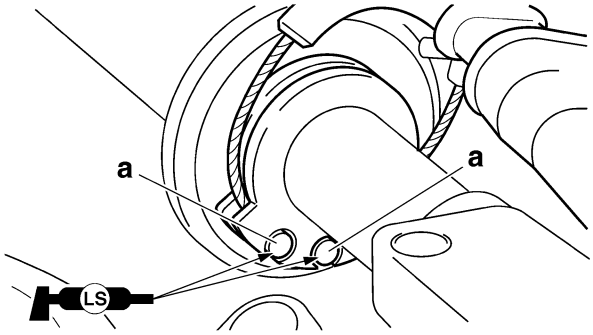

3. Install:
   • Throttle grip cap
   • Screw (throttle grip cap)

	Screw (throttle grip cap) **3.8 Nm (0.38 m·kgf, 2.8 ft·lbf)**

4. Install:
   • Cover (grip cap)
   • Cover (throttle cable cap)

WARNING

Check that the throttle grip moves smoothly. If this does not move smoothly, correct the installed positions.

CLEANING THE AIR FILTER ELEMENT

1. Remove:
   • Fuel tank cap cover “1”
   Refer to “FUEL TANK CAP” on page 1-23.
   • Air filter case cover “2”

TIP

Loosen the quick fastener screw “3” and remove the air filter case cover.

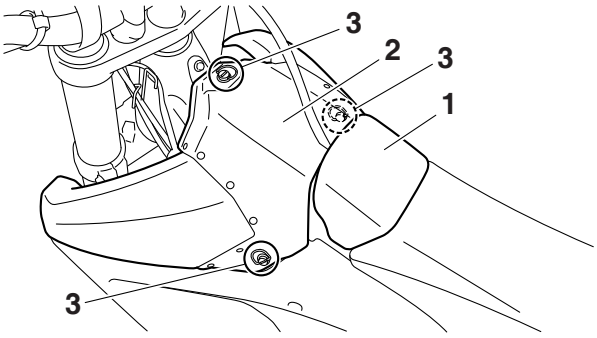

2. Remove:
   • Air filter mounting bolt “1”
   • Air filter element “2”
   • Air filter guide “3” (from the air filter element)

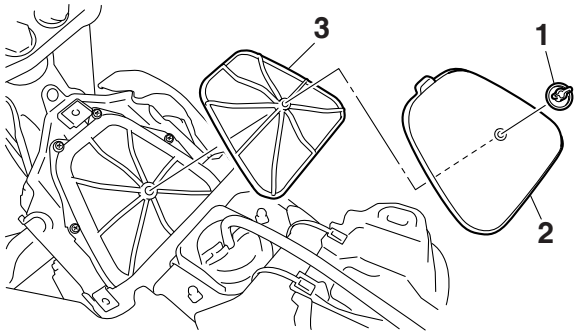

3. Wash:
   • Air filter element

WARNING

Do not use gasoline or organic (acid/alkaline) volatile oil for washing.

TIP

After washing the element with air filter cleaner or kerosene, squeeze and dry it completely.

NOTICE

Do not twist the element when squeezing the element.

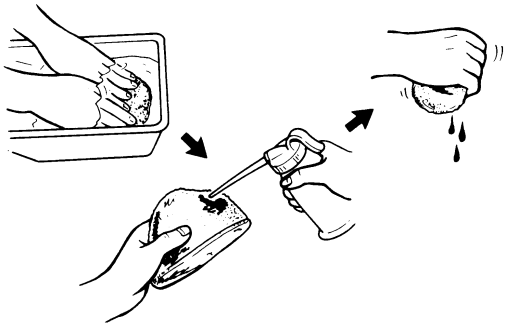

4. Check:
   • Air filter element
   Damage → Replace.
5. Foam-air-filter oil or equivalent oil to the element

	Oil application quantify **50 g**

TIP

Squeeze out the excess oil. Element should be wet but not dripping.

6. Install:
   - Air filter guide “1” (to the air filter element)
   - Air filter element “2”
   - Air filter mounting bolt “3”

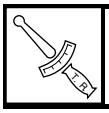	**Air filter mounting bolt** **2.0 Nm (0.20 m·kgf, 1.4 ft·lbf)**

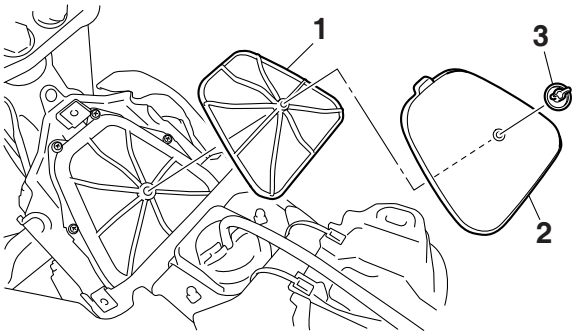

7. Install:
   - Air filter case cover “1”

TIP

Align the air filter case cover groove “a” with the air filter case edge “b”.

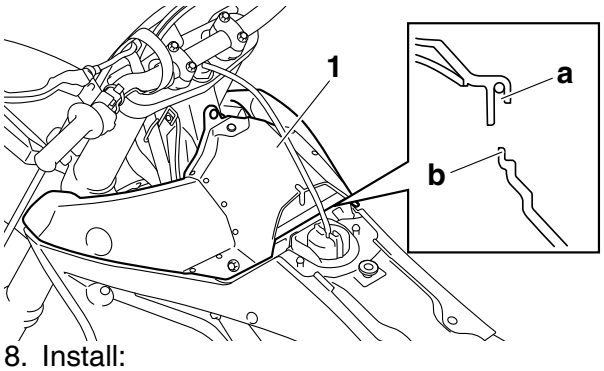

8. Install:
   - Fuel tank cap cover

CHECKING THE THROTTLE BODY JOINT

1. Check:
   - Throttle body joint
     Refer to “CHECKING THE THROTTLE BODY JOINT” on page 8-10.

CHECKING THE BREATHER HOSES

1. Check:
   - Breather hose “1”
     Crack/damage → Replace.
     Loose connection → Connect properly.

NOTICE

Make sure the cylinder head breather hose is routed correctly.

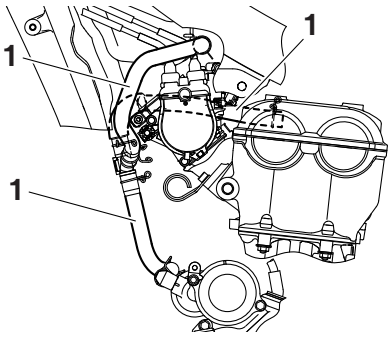

CHECKING THE EXHAUST SYSTEM

1. Remove:
   - Exhaust pipe protector
2. Check:
   - Exhaust pipe 1
   - Exhaust pipe 2
   - Silencer
     Crack/damage → Replace.
     Refer to “ENGINE REMOVAL” on page 6-1.
   - Exhaust gas
     Leaks → Replace the gasket.
     Refer to “ENGINE REMOVAL” on page 6-1.
3. Check:
   - Tightening torques

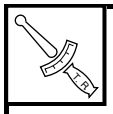	**Exhaust pipe bolt 1 and nut “1”** **20 Nm (2.0 m·kgf, 14 ft·lbf)** **Exhaust pipe 1 and exhaust pipe 2 bolt “2”** **12 Nm (1.2 m·kgf, 8.7 ft·lbf)** **Exhaust pipe 2 and silencer bolt “3”** **12 Nm (1.2 m·kgf, 8.7 ft·lbf)** **Silencer and silencer bracket bolt “4”** **30 Nm (3.0 m·kgf, 22 ft·lbf)**

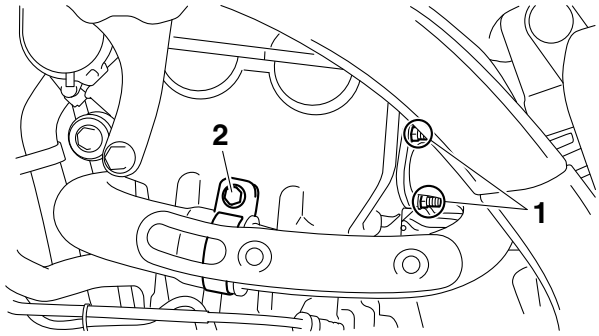

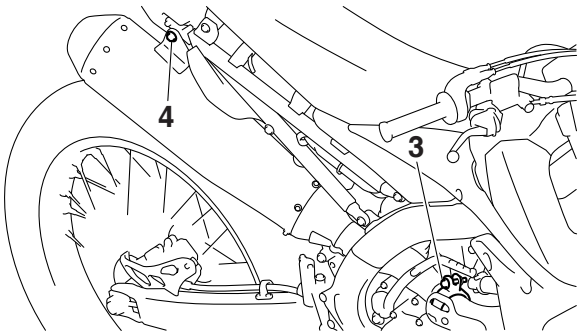

4. Install:
   - Exhaust pipe protector

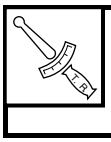

Exhaust pipe protector screw
10 Nm (1.0 m·kgf, 7.2 ft·lbf)
LOCTITE®

CHECKING THE FUEL LINE

1. Remove:
   - Seat
   - Side cover (left/right)
   - Air scoop (left/right)
     Refer to “GENERAL CHASSIS” on page 5-1.
   - Fuel tank
     Refer to “FUEL TANK” on page 8-1.
2. Check:
   - Fuel hose “1”
     Crack/damage → Replace.
     Loose connection → Connect properly.

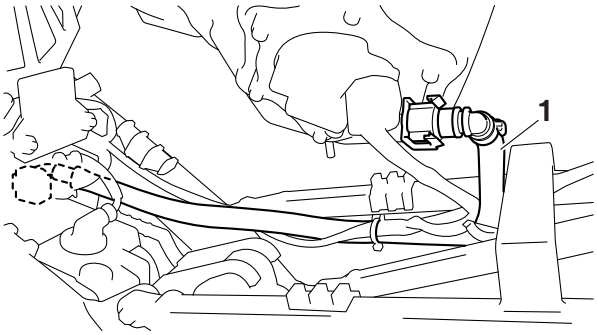

3. Install:
   - Fuel tank
     Refer to “FUEL TANK” on page 8-1.
   - Air scoop (left/right)
   - Seat
   - Side cover (left/right)
     Refer to “GENERAL CHASSIS” on page 5-1.

CHECKING THE ENGINE OIL LEVEL

1. Stand the vehicle upright on a level surface.
2. Start the engine, warm this up for 3 minutes, and then stop the engine and wait about 5 minute.
3. Check:
   - Oil level
     The engine oil level should be between the minimum level mark “a” and maximum level mark “b”.
     Below the minimum level mark → Add the recommended engine oil to the proper level.

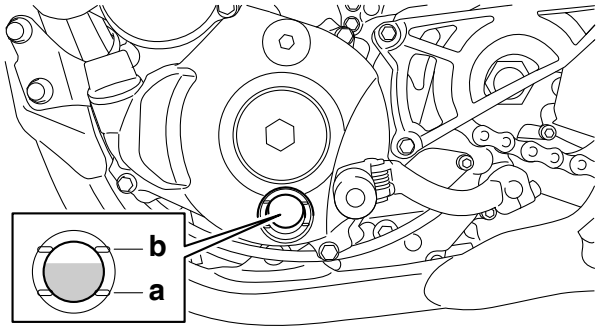

NOTICE

- **Since engine oil also lubricates the clutch, the wrong oil types or additives could cause clutch slippage. Therefore, do not add any chemical additives.**
- **Do not allow foreign material to enter the crankcase.**

Recommended brand
YAMALUBE
Recommended engine oil type
SAE10W-30, SAE10W-40, SAE10W-50, SAE15W-40, SAE20W-40 or SAE20W-50
Recommended engine oil grade
API service SG type or higher, JASO standard MA

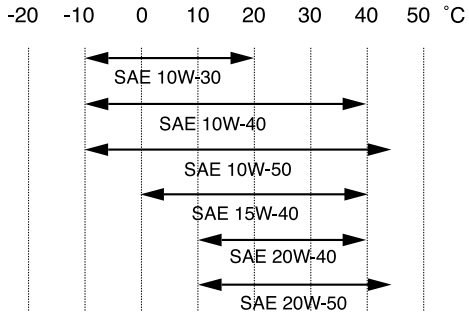

CHANGING THE ENGINE OIL

Stand the vehicle upright on a level surface.

1. Start the engine, warm this up for 3 minutes, and then stop the engine and wait about 5 minutes.
2. Place an oil pan under the drain bolt.
3. Remove:
   - Engine guard “1”
   - Oil filler cap “2”
   - Drain bolt (with gasket) “3”

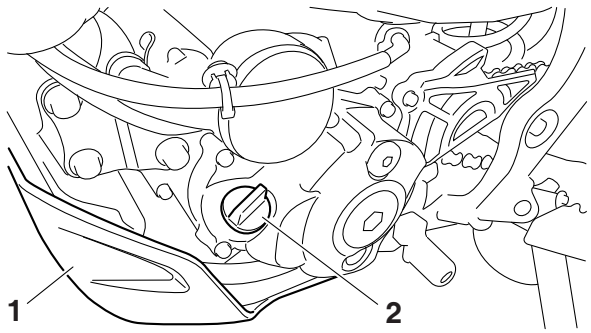

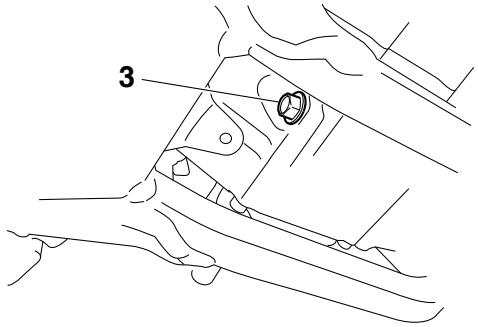

4. If the oil filter element is also to be replaced, perform the following procedure.

▼▼▼▼▼▼▼▼▼▼▼▼▼▼▼▼▼▼▼▼▼▼▼▼▼▼▼▼▼▼▼▼▼▼

a. Remove the oil filter element cover “1” and oil filter element “2”.
b. Replace the O-ring “3”.

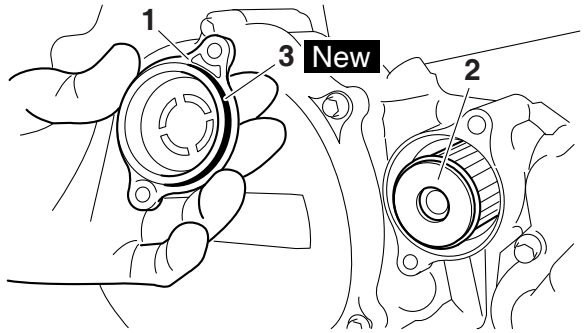

c. Install the new oil filter element and the oil filter element cover.

	Oil filter element cover bolt **10 Nm (1.0 m·kgf, 7.2 ft·lbf)**

▲▲▲▲▲▲▲▲▲▲▲▲▲▲▲▲▲▲▲▲▲▲▲▲▲▲▲▲▲▲▲▲▲▲

5. To check the oil strainer, perform the following procedure.

▼▼▼▼▼▼▼▼▼▼▼▼▼▼▼▼▼▼▼▼▼▼▼▼▼▼▼▼▼▼▼▼▼▼

a. Remove the oil strainer “1”.
b. Check the oil strainer.
   Damage → Replace.
   Clogging due to dirt → Wash with kerosene.
c. Replace the O-ring “2”.

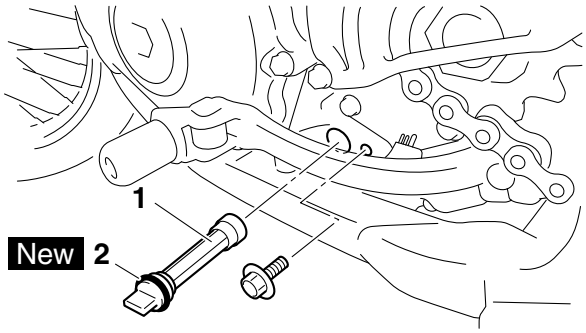

d. Install the oil strainer.

	Oil strainer bolt **10 Nm (1.0 m·kgf, 7.2 ft·lbf)**

▲▲▲▲▲▲▲▲▲▲▲▲▲▲▲▲▲▲▲▲▲▲▲▲▲▲▲▲▲▲▲▲▲▲

6. Install:
   - Gasket New
   - Drain bolt

	Drain bolt **20 Nm (2.0 m·kgf, 14 ft·lbf)**

7. Pour the specified amount of engine oil into the oil filler cap hole.

	Engine oil quantity **Without oil filter element replacement** **0.83 L (0.88 US qt, 0.73 Imp.qt)** **With oil filter element replacement** **0.85 L (0.90 US qt, 0.75 Imp.qt)** **Quantity (disassembled)** **1.10 L (1.16 US qt, 0.97 Imp.qt)**

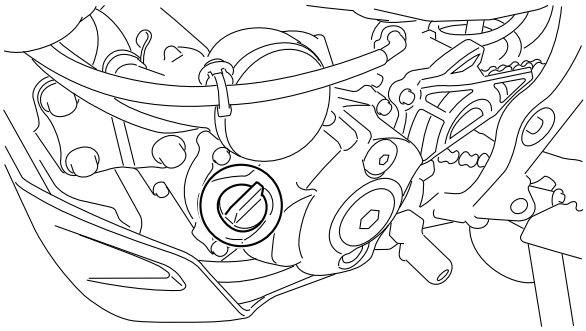

8. Install:
   - Oil filler cap
9. Check:
   - Oil level
     Refer to “CHECKING THE ENGINE OIL LEVEL” on page 3-16.
10. Check:
   - Engine oil pressure

▼▼▼▼▼▼▼▼▼▼▼▼▼▼▼▼▼▼▼▼▼▼▼▼▼▼▼▼▼▼▼▼▼▼

a. Slightly loosen the oil pressure check bolt “1”.

WARNING

When the engine is started with the check bolt removed, oil will spout; therefore, always loosen it before the checkup.

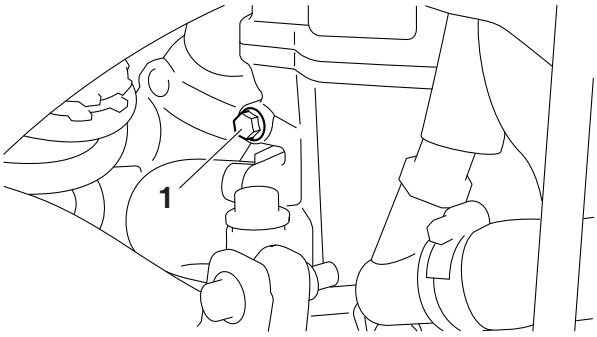

Start the engine and keep it idling until oil starts to seep from the oil pressure check bolt.

WARNING

Always keep the engine idling speed during the checkup without increasing the engine speed.

NOTICE

If no engine oil seeps out after one minute, immediately turn the engine off so it will not seize.

b. If no engine oil seeps out, check the engine oil for leaks, and the engine oil passage and the oil pump for damage.
c. Check the oil pressure again.
d. Tighten the oil pressure check bolt.

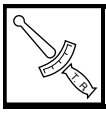	**Oil pressure check bolt** **10 Nm (1.0 m·kgf, 7.2 ft·lbf)**

▲▲▲▲▲▲▲▲▲▲▲▲▲▲▲▲▲▲▲▲▲▲▲▲▲▲▲▲▲▲▲▲▲▲

ADJUSTING THE ENGINE IDLING SPEED

TIP

- Because the air pressure is lower at high altitudes, the air-fuel mixture will become richer. If the idling speed is low, turn the starter knob/idle screw a few clicks counterclockwise to increase the speed before the adjustment.
- Before adjusting the engine idling speed, make sure that the air filter element is not clogged, the engine compression is proper, and the throttle grip free play is proper.
- Adjust the engine idling speed with the starter knob/idle screw pushed in completely.

1. Start the engine, and warm this up until the oil has reached the specified temperature.
2. Attach the pocket tester with temperature probe “1” to the oil drain bolt.

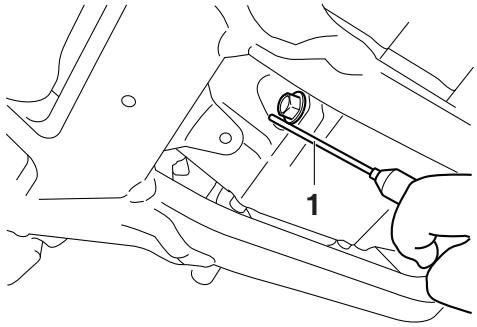

	**Oil temperature** **70.0–80.0 °C (158.00–176.00 °F)**

3. Install:
   - Digital tachometer

	**Digital tachometer** **90890-06760** **Digital tachometer** **YU-39951-B**

TIP

Get the high tension cord “1” of the ignition coil pinched in the detector “a” of the digital tachometer.

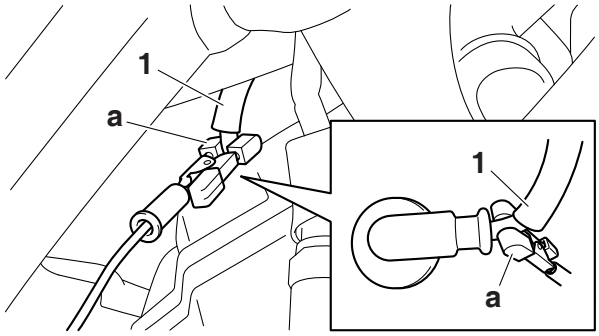

4. Measure:
   - Engine idling speed
     Out of specification → Regulate.

	**Engine idling speed** **1900–2100 r/min**

5. Adjust:
   - Engine idling speed

▼▼▼▼▼▼▼▼▼▼▼▼▼▼▼▼▼▼▼▼▼▼▼▼▼▼▼▼▼▼▼▼▼▼

a. Turn the starter knob/idle screw "1" in the direction of "a" or "b" to make an adjustment.

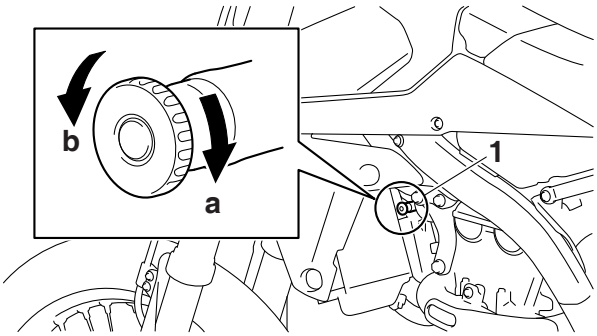

Direction "a"	Engine idling speed → Decreases.
Direction "b"	Engine idling speed → Increases.

▲▲▲▲▲▲▲▲▲▲▲▲▲▲▲▲▲▲▲▲▲▲▲▲▲▲▲▲▲▲▲▲▲▲

ADJUSTING THE VALVE CLEARANCE

TIP

- This section is intended for those who have basic knowledge and skill concerning the servicing of Yamaha motorcycles (e.g., Yamaha dealers, service engineers, etc.). Those who have little knowledge and skill concerning servicing are requested not to undertake inspection, adjustment, disassembly, or reassembly only by reference to this manual. It may lead to servicing trouble and mechanical damage.
- Make sure that the valve clearance is checked or adjusted while the engine is cold (at room temperature).
- While the valve clearance is checked or adjusted, make sure that the piston is positioned in the top dead center (TDC).

1. Remove:
   - Seat
   - Side cover (left/right)
   - Air scoop (left/right)
     Refer to "GENERAL CHASSIS" on page 5-1.
   - Fuel tank
     Refer to "FUEL TANK" on page 8-1.
   - ECU
2. Remove:
   - Spark plug
   - Cylinder head cover
     Refer to "CAMSHAFT" on page 6-11.
3. Remove:
   - Timing mark accessing screw "1"
   - Crankshaft end accessing screw "2"
   - O-ring

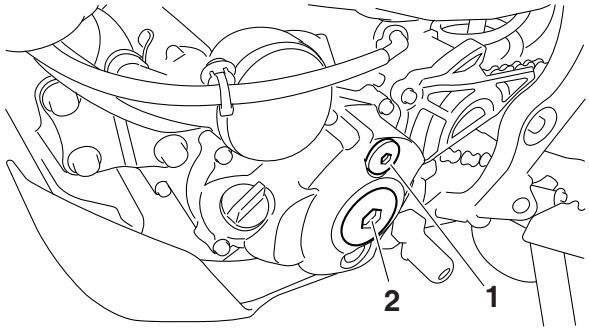

4. Check:
   - Valve clearance
     Out of specification → Regulate.

	**Valve clearance (cold)** **Intake** **0.12–0.19 mm (0.0047–0.0075 in)** **Exhaust** **0.17–0.24 mm (0.0067–0.0094 in)**

▼▼▼▼▼▼▼▼▼▼▼▼▼▼▼▼▼▼▼▼▼▼▼▼▼▼▼▼▼▼▼▼▼▼

a. Turn the crankshaft counterclockwise with a wrench.
b. Align the top dead center (TDC) mark "a" on the rotor with the alignment mark "b" on the crankcase cover.

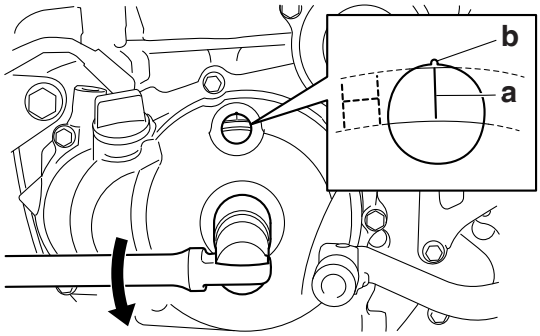

TIP

Check that the alignment mark “c” on the camshaft sprocket and the alignment mark “d” on the intake camshaft sprocket are aligned with the edge of the cylinder head.

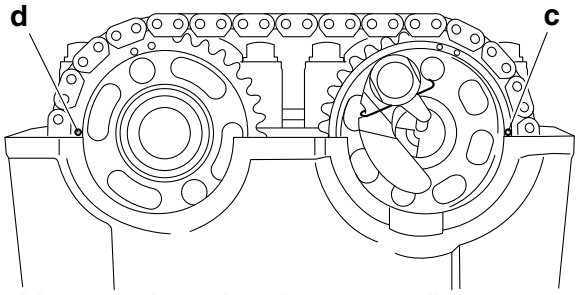

c. Measure the valve clearance “e” using a thickness gauge “1”.

TIP

Record the measured reading if the clearance is incorrect.

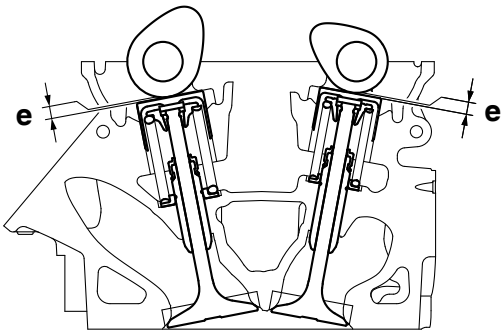

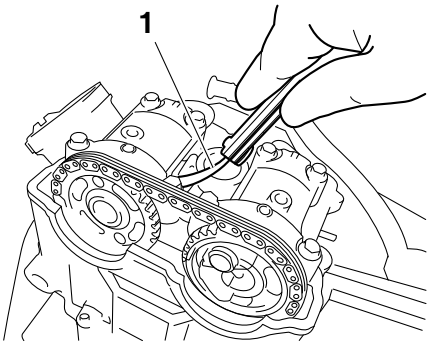

▲▲▲▲▲▲▲▲▲▲▲▲▲▲▲▲▲▲▲▲▲▲▲▲▲▲▲▲▲▲▲▲▲▲

5. Adjust:
   - Valve clearance

▼▼▼▼▼▼▼▼▼▼▼▼▼▼▼▼▼▼▼▼▼▼▼▼▼▼▼▼▼▼▼▼▼▼

a. Remove the camshaft (intake and exhaust). Refer to “CAMSHAFT” on page 6-11.
b. Remove the valve lifter “2” and the adjusting pad “3” with a valve lapper “1”.

TIP

- Place a cloth in the timing chain space to prevent adjusting pads from falling into the crankcase.
- Identity each valve lifter and adjusting pad position very carefully so that they can be reinstalled in their original place.

Valve lapper
90890-04101
Valve lapping tool
YM-A8998

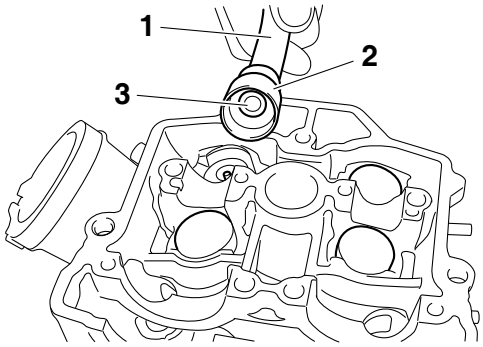

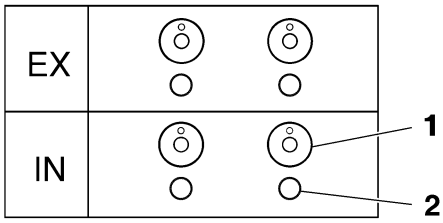

c. Check the number on the originally installed adjusting pad.

TIP

- The adjusting pad number “a” is indicated on the top of the adjusting pad.
- For the number on the originally installed adjusting pad, convert the last digit of adjusting pad number as per the below table.

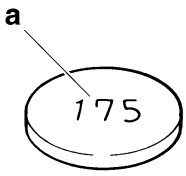

d. Select an adjusting pad with a proper valve clearance from the adjusting pad selection table.

TIP

- There are 25 types of adjusting pads, ranging from 1.20 mm (0.0472 in) to 2.40 mm (0.0945 in), in increments of 0.05 mm (0.0020 in).
- The field where the number on the originally installed adjusting pad and the measured valve clearance intersect shows the adjusting pad number to replace.

Last digit of pad number	Rounded valve
0, 1 or 2	0
4, 5 or 6	5
8 or 9	10

Example:
Pad number = 148
Rounded value = 150

e. Install the new adjusting pads “4” and the valve lifters “5”.

NOTICE

Do not twist adjusting pads and valve lifters forcibly during installation.

TIP

- Apply the engine oil on the valve lifters.
- Apply molybdenum disulfide oil to the valve stem ends.
- Check that the valve lifters turn smoothly when rotated with your finger.
- Make sure that valve lifters and adjusting pads are installed in place.
- Make sure that adjusting pads are installed with their numbers facing upward.

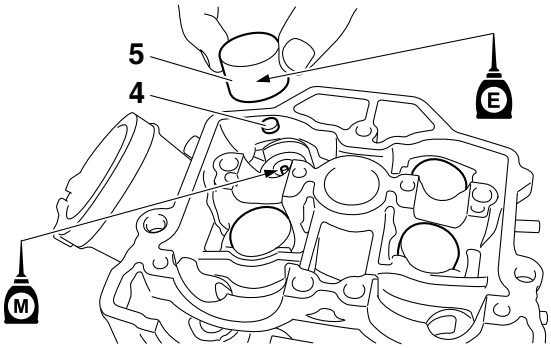

f. Install the camshafts (exhaust and intake). Refer to “CAMSHAFT” on page 6-11.
g. Measure the valve clearance again.
h. If the valve clearance is out of specification, repeat adjusting the valve clearance until it is within specification.

▲▲▲▲▲▲▲▲▲▲▲▲▲▲▲▲▲▲▲▲▲▲▲▲▲▲▲▲▲▲▲▲▲▲

INTAKE

MEASURED CLEARANCE	INSTALLED PAD NUMBER																								
	120	125	130	135	140	145	150	155	160	165	170	175	180	185	190	195	200	205	210	215	220	225	230	235	240
0.00 – 0.01				120	125	130	135	140	145	150	155	160	165	170	175	180	185	190	195	200	205	210	215	220	225
0.02 – 0.06			120	125	130	135	140	145	150	155	160	165	170	175	180	185	190	195	200	205	210	215	220	225	230
0.07 – 0.11		120	125	130	135	140	145	150	155	160	165	170	175	180	185	190	195	200	205	210	215	220	225	230	235
0.12 – 0.19	STANDARD CLEARANCE																								
0.20 – 0.24	125	130	135	140	145	150	155	160	165	170	175	180	185	190	195	200	205	210	215	220	225	230	235	240	
0.25 – 0.29	130	135	140	145	150	155	160	165	170	175	180	185	190	195	200	205	210	215	220	225	230	235	240		
0.30 – 0.34	135	140	145	150	155	160	165	170	175	180	185	190	195	200	205	210	215	220	225	230	235	240			
0.35 – 0.39	140	145	150	155	160	165	170	175	180	185	190	195	200	205	210	215	220	225	230	235	240				
0.40 – 0.44	145	150	155	160	165	170	175	180	185	190	195	200	205	210	215	220	225	230	235	240					
0.45 – 0.49	150	155	160	165	170	175	180	185	190	195	200	205	210	215	220	225	230	235	240						
0.50 – 0.54	155	160	165	170	175	180	185	190	195	200	205	210	215	220	225	230	235	240							
0.55 – 0.59	160	165	170	175	180	185	190	195	200	205	210	215	220	225	230	235	240								
0.60 – 0.64	165	170	175	180	185	190	195	200	205	210	215	220	225	230	235	240									
0.65 – 0.69	170	175	180	185	190	195	200	205	210	215	220	225	230	235	240										
0.70 – 0.74	175	180	185	190	195	200	205	210	215	220	225	230	235	240											
0.75 – 0.79	180	185	190	195	200	205	210	215	220	225	230	235	240												
0.80 – 0.84	185	190	195	200	205	210	215	220	225	230	235	240													
0.85 – 0.89	190	195	200	205	210	215	220	225	230	235	240														
0.90 – 0.94	195	200	205	210	215	220	225	230	235	240															
0.95 – 0.99	200	205	210	215	220	225	230	235	240																
1.00 – 1.04	205	210	215	220	225	230	235	240																	
1.05 – 1.09	210	215	220	225	230	235	240																		
1.10 – 1.14	215	220	225	230	235	240																			
1.15 – 1.19	220	225	230	235	240																				
1.20 – 1.24	225	230	235	240																					
1.25 – 1.29	230	235	240																						
1.30 – 1.34	235	240																							
1.35 – 1.39	240																								

VALVE CLEARANCE (cold):
0.12 – 0.19 mm
Example: Installed is 175
Measured clearance is 0.27 mm
Replace 175 pad with 185 pad
Pad number: (example)
Pad No. 175 = 1.75 mm
Pad No. 185 = 1.85 mm

EXHAUST

MEASURED CLEARANCE	INSTALLED PAD NUMBER																								
	120	125	130	135	140	145	150	155	160	165	170	175	180	185	190	195	200	205	210	215	220	225	230	235	240
0.00 – 0.01					120	125	130	135	140	145	150	155	160	165	170	175	180	185	190	195	200	205	210	215	220
0.02 – 0.06				120	125	130	135	140	145	150	155	160	165	170	175	180	185	190	195	200	205	210	215	220	225
0.07 – 0.11			120	125	130	135	140	145	150	155	160	165	170	175	180	185	190	195	200	205	210	215	220	225	230
0.12 – 0.16		120	125	130	135	140	145	150	155	160	165	170	175	180	185	190	195	200	205	210	215	220	225	230	235
0.17 – 0.24	STANDARD CLEARANCE																								
0.25 – 0.29	125	130	135	140	145	150	155	160	165	170	175	180	185	190	195	200	205	210	215	220	225	230	235	240	
0.30 – 0.34	130	135	140	145	150	155	160	165	170	175	180	185	190	195	200	205	210	215	220	225	230	235	240		
0.35 – 0.39	135	140	145	150	155	160	165	170	175	180	185	190	195	200	205	210	215	220	225	230	235	240			
0.40 – 0.44	140	145	150	155	160	165	170	175	180	185	190	195	200	205	210	215	220	225	230	235	240				
0.45 – 0.49	145	150	155	160	165	170	175	180	185	190	195	200	205	210	215	220	225	230	235	240					
0.50 – 0.54	150	155	160	165	170	175	180	185	190	195	200	205	210	215	220	225	230	235	240						
0.55 – 0.59	155	160	165	170	175	180	185	190	195	200	205	210	215	220	225	230	235	240							
0.60 – 0.64	160	165	170	175	180	185	190	195	200	205	210	215	220	225	230	235	240								
0.65 – 0.69	165	170	175	180	185	190	195	200	205	210	215	220	225	230	235	240									
0.70 – 0.74	170	175	180	185	190	195	200	205	210	215	220	225	230	235	240										
0.75 – 0.79	175	180	185	190	195	200	205	210	215	220	225	230	235	240											
0.80 – 0.84	180	185	190	195	200	205	210	215	220	225	230	235	240												
0.85 – 0.89	185	190	195	200	205	210	215	220	225	230	235	240													
0.90 – 0.94	190	195	200	205	210	215	220	225	230	235	240														
0.95 – 0.99	195	200	205	210	215	220	225	230	235	240															
1.00 – 1.04	200	205	210	215	220	225	230	235	240																
1.05 – 1.09	205	210	215	220	225	230	235	240																	
1.10 – 1.14	210	215	220	225	230	235	240																		
1.15 – 1.19	215	220	225	230	235	240																			
1.20 – 1.24	220	225	230	235	240																				
1.25 – 1.29	225	230	235	240																					
1.30 – 1.34	230	235	240																						
1.35 – 1.39	235	240																							
1.40 – 1.44	240																								

VALVE CLEARANCE (cold):
0.17 – 0.24 mm
Example: Installed is 175
Measured clearance is 0.32 mm
Replace 175 pad with 185 pad
Pad number: (example)
Pad No. 175 = 1.75 mm
Pad No. 185 = 1.85 mm

CLEANING THE SPARK ARRESTER

Refer to “CLEANING THE SPARK ARRESTER” on page 6-7.

CHASSIS

BLEEDING THE BRAKE SYSTEM

WARNING

Bleed the brake system whenever:
- **The system is disassembled.**
- **A brake hose is loosened, disconnected, or replaced.**
- **The brake fluid level is very low.**
- **Brake operation is faulty.**

1. Remove:
   - Brake master cylinder cap
   - Reservoir diaphragm
   - Reservoir float (front brake)
   - Protector (rear brake)

TIP

- Be careful not to spill any brake fluid or allow the reservoir to overflow.
- Make sure that there is enough brake fluid before applying the brake. Ignoring this precaution could allow air to enter the brake system, considerably lengthening the bleeding procedure.
- If bleeding is difficult, it may be necessary to let the brake fluid settle for a few hours. Repeat the bleeding procedure when the tiny bubbles in the hose have disappeared.

2. Bleed the brake system.

▼▼▼▼▼▼▼▼▼▼▼▼▼▼▼▼▼▼▼▼▼▼▼▼▼▼▼▼▼▼▼▼▼▼

a. Fill the reservoir to the proper level with the recommended brake fluid.
b. Install the reservoir diaphragm.
c. Connect the plastic hose “1” to the bleed screw “2” securely, and place a container under the end of the plastic hose.

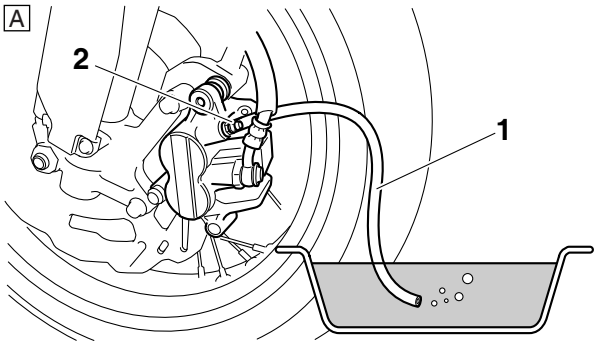

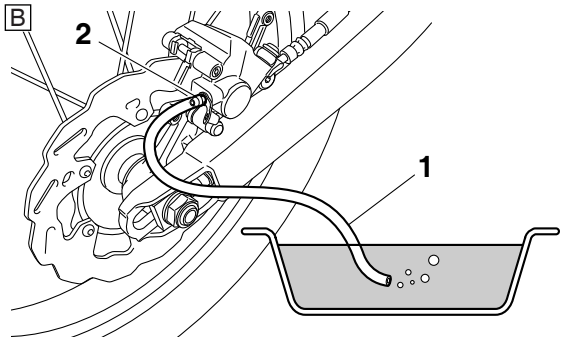

A. Front
B. Rear

d. Slowly apply the brake several times.
e. Fully pull the brake lever or fully press down the brake pedal and hold it in position.
f. Loosen the bleed screw.

TIP

Loosening the bleed screw will release the pressure in the brake caliper and cause the brake lever to contact the throttle grip or the brake pedal to fully extend.

g. Tighten the bleed screw and then release the brake lever or brake pedal.
h. Repeat steps (d) to (g) until all of the air bubbles have disappeared from the brake fluid in the plastic hose.

TIP

During the procedure, keep adding brake fluid to the reservoir.

NOTICE

- **Wipe off any brake fluid on the brake discs, tires, wheels, etc.**
- **Brake fluid may erode painted surfaces or plastic parts. Always clean up spilled fluid immediately.**

i. Tighten the bleed screw.

Bleed screw
6 Nm (0.6 m·kgf, 4.3 ft·lbf)

j. Pour brake fluid to the reservoir up to the specified level.
   Refer to “CHECKING THE BRAKE FLUID LEVEL” on page 3-29.

WARNING

After bleeding the hydraulic brake system, check the brake operation.

▲▲▲▲▲▲▲▲▲▲▲▲▲▲▲▲▲▲▲▲▲▲▲▲▲▲▲▲▲▲▲▲▲▲

CHECKING THE BRAKE HOSE

1. Check:
   - Brake hose "1"
     Cracks/damage/wear → Replace.

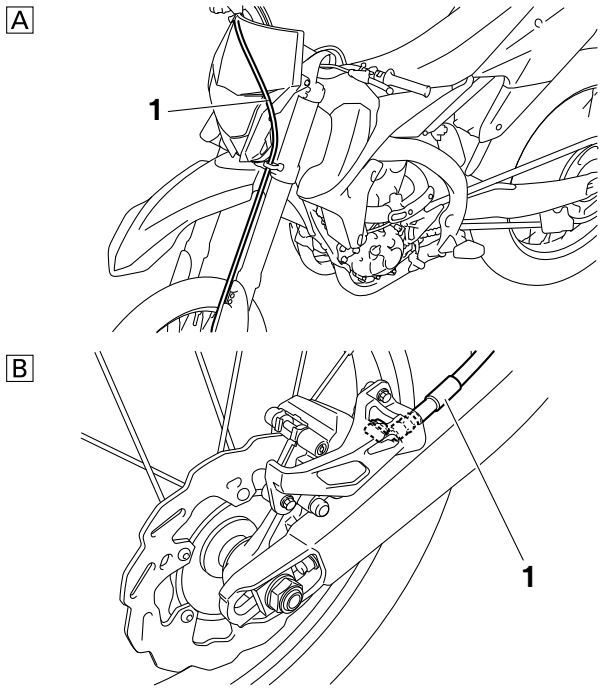

A. Front
B. Rear

2. Check:
   - Brake hose clamp
     Loose connection → Tighten the clamp bolt.
3. Stand the vehicle upright and apply the front brake and the rear brake several times.
4. Check:
   - Brake hoses
     Brake fluid leaks → Replace the damaged brake hose.
     Refer to "FRONT BRAKE" on page 5-13.
     Refer to "REAR BRAKE" on page 5-23.

ADJUSTING THE FRONT BRAKE

1. Check:
   - Brake lever position "a"

	**Brake lever position** **95 mm (3.74 in)** **Extent of adjustment** **76–97 mm (2.99–3.82 in)**

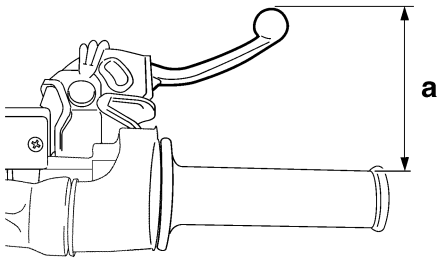

2. Remove:
   - Brake lever cover
3. Adjust:
   - Brake lever position

▼▼▼▼▼▼▼▼▼▼▼▼▼▼▼▼▼▼▼▼▼▼▼▼▼▼▼▼▼▼▼▼▼▼

a. Loosen the locknut "1".
b. Turn the adjusting bolt "2" in direction "a" or "b" until the specified brake lever position is obtained.

Direction "a" **Brake lever position is increased.** **Direction "b"** **Brake lever position is decreased.**

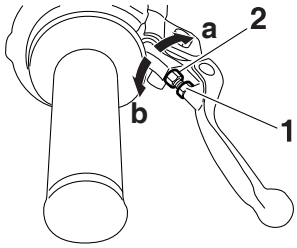

c. Tighten the locknut.

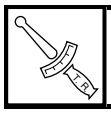	**Locknut** **5 Nm (0.5 m·kgf, 3.6 ft·lbf)**

WARNING

A soft or spongy feeling in the brake lever can indicate the presence of air in the brake system. Before the vehicle is operated, the air must be removed by bleeding the brake system. Air in the brake system will considerably reduce braking performance.

NOTICE

After adjusting the brake lever position, make sure there is no brake drag.

▲▲▲▲▲▲▲▲▲▲▲▲▲▲▲▲▲▲▲▲▲▲▲▲▲▲▲▲▲▲▲▲▲▲

4. Install:
   - Brake lever cover

ADJUSTING THE REAR BRAKE

1. Check:
   - Brake pedal position “a”
     (distance from the top of the rider footrest to the top of the brake pedal)
     Out of specification → Regulate.

	**Brake pedal position** **5 mm (0.20 in)**

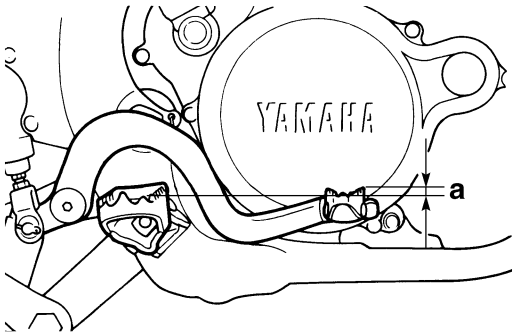

2. Adjust:
   - Brake pedal position

▼▼▼▼▼▼▼▼▼▼▼▼▼▼▼▼▼▼▼▼▼▼▼▼▼▼▼▼▼▼▼▼▼▼

a. Loosen the locknut “1”.
b. Turn the adjusting bolt “2” in direction “a” or “b” until the specified brake pedal position is obtained.

Direction “a” **Brake pedal is raised.** **Direction “b”** **Brake pedal is lowered.**

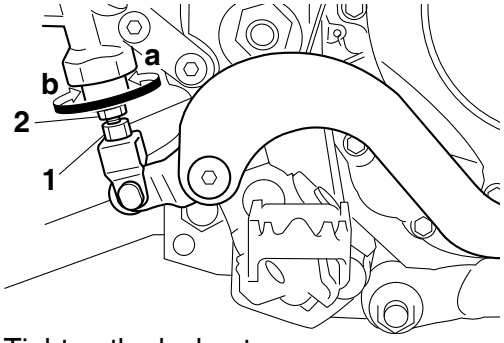

c. Tighten the locknut.

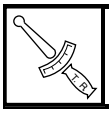	**Locknut** **6 Nm (0.6 m·kgf, 4.3 ft·lbf)**

⚠ WARNING

A soft or spongy feeling in the brake pedal can indicate the presence of air in the brake system. Before running, bleed the brake system. Air in the brake system will cause braking performance to be reduced.

NOTICE

After adjusting the brake pedal position, make sure that there is no brake drag.

▲▲▲▲▲▲▲▲▲▲▲▲▲▲▲▲▲▲▲▲▲▲▲▲▲▲▲▲▲▲▲▲▲▲

CHECKING THE FRONT BRAKE PADS

1. Measure:
   - Brake pad thickness “a”
     Out of specification → Replace as a set.

TIP

The pads worn up to the indicator “b” grooves mean that the brake pad thickness limit is reached.

	**Brake pad lining thickness (inner)** **4.4 mm (0.17 in)** **Limit** **1.0 mm (0.04 in)** **Brake pad lining thickness (outer)** **4.4 mm (0.17 in)** **Limit** **1.0 mm (0.04 in)**

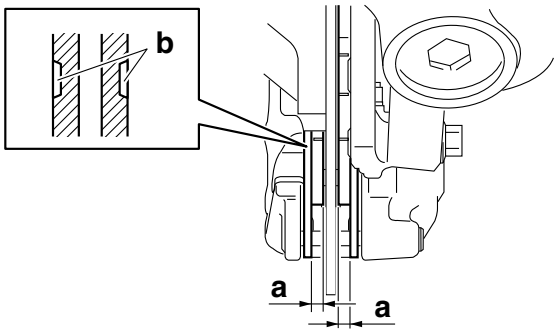

2. Replace:
   - Brake pads

▼▼▼▼▼▼▼▼▼▼▼▼▼▼▼▼▼▼▼▼▼▼▼▼▼▼▼▼▼▼▼▼▼▼

a. Remove the pad pin plug “1”.

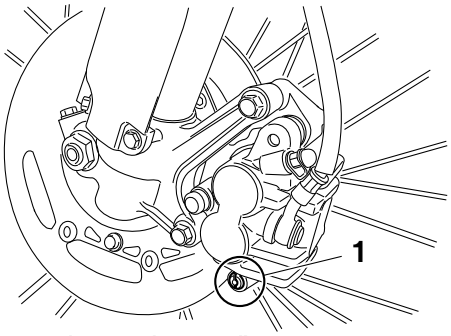

b. Loosen the pad pin “2”.
c. Remove the brake caliper “3” from the front fork.

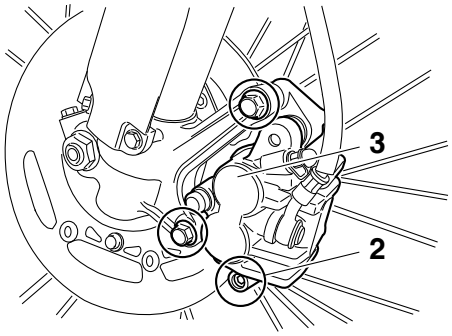

d. Remove the pad pin and brake pads “4”.

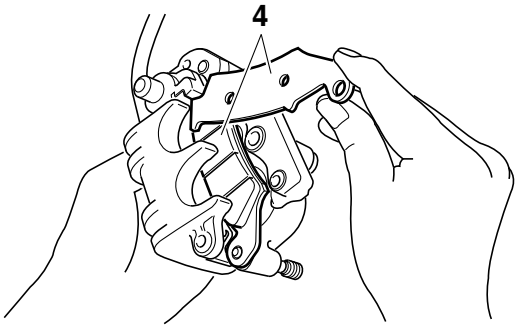

e. Connect the plastic hose “5” to the bleed screw “6” and place a container under the end of the plastic hose.

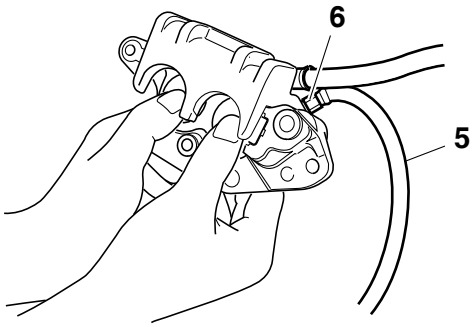

f. Loosen the bleed screw and push the brake caliper piston in.

WARNING

Do not reuse the drained brake fluid.

g. Tighten the bleed screw.

	Bleed screw **6 Nm (0.6 m·kgf, 4.3 ft·lbf)**

h. Install the brake pads “7” and the pad pin.

TIP

- Install the brake pads with their projections “a” into the brake caliper recesses “b”.
- Temporarily tighten the pad pin at this point.

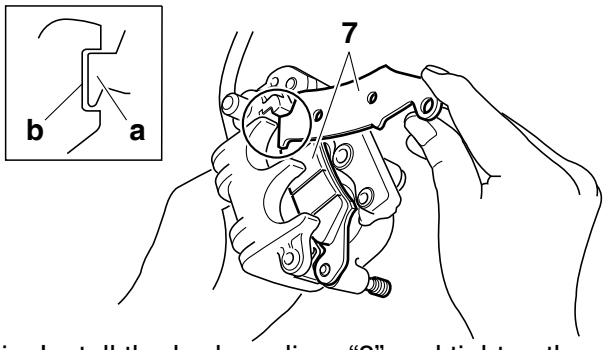

i. Install the brake caliper “8” and tighten the pad pin “9”.

	Bolt (brake caliper) **23 Nm (2.3 m·kgf, 17 ft·lbf)** **Pad pin** **17 Nm (1.7 m·kgf, 12 ft·lbf)**

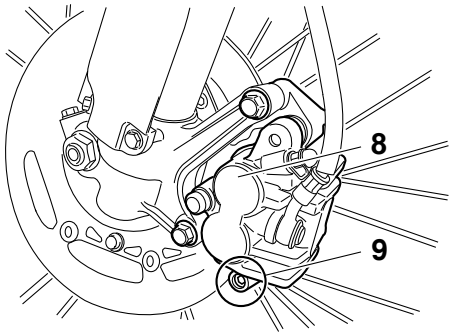

j. Install the pad pin plug “10”.

	Pad pin plug **2.5 Nm (0.25 m·kgf, 1.8 ft·lbf)**

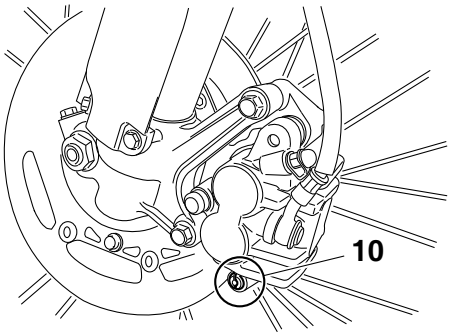

▲▲▲▲▲▲▲▲▲▲▲▲▲▲▲▲▲▲▲▲▲▲▲▲▲▲▲▲▲▲▲▲

3. Check:
   - Brake fluid level
     Refer to “CHECKING THE BRAKE FLUID LEVEL” on page 3-29.
4. Check:
   - Brake lever operation
     A softy or spongy feeling → Bleed the brake system.
     Refer to “BLEEDING THE BRAKE SYSTEM” on page 3-24.

CHECKING THE REAR BRAKE PADS

1. Measure:
   - Brake pad thickness “a”
     Out of specification → Replace as a set.

TIP

The pads worn up to the indicator “b” grooves mean that the brake pad thickness limit is reached.

Brake pad lining thickness (inner)
6.4 mm (0.25 in)
Limit
1.0 mm (0.04 in)
Brake pad lining thickness (outer)
6.4 mm (0.25 in)
Limit
1.0 mm (0.04 in)

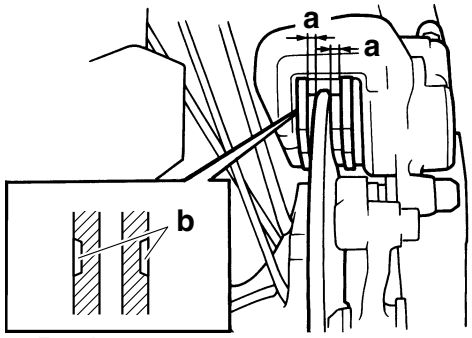

2. Replace:
   - Brake pads

▼▼▼▼▼▼▼▼▼▼▼▼▼▼▼▼▼▼▼▼▼▼▼▼▼▼▼▼▼▼▼▼▼▼

a. Remove the protector “1” and the pad pin plug “2”.

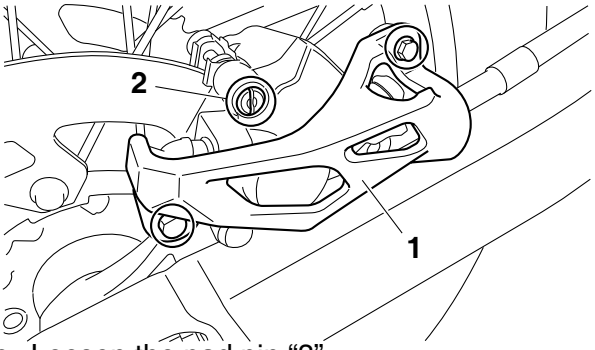

b. Loosen the pad pin “3”.
c. Remove the rear wheel “4” and the brake caliper “5”.
   Refer to “REAR WHEEL” on page 5-9.

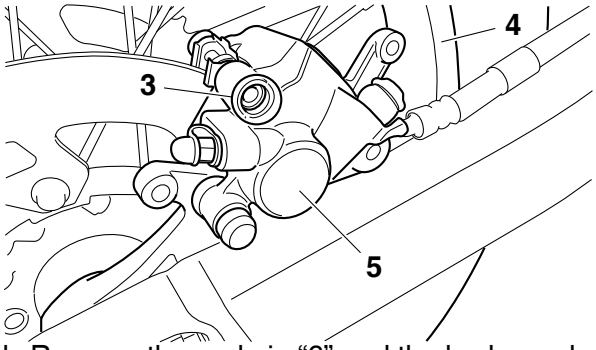

d. Remove the pad pin “6” and the brake pads “7”.

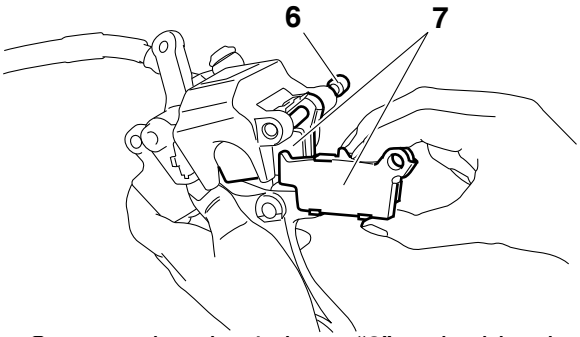

e. Connect the plastic hose “8” to the bleed screw “9” and place a container under the end of the plastic hose.

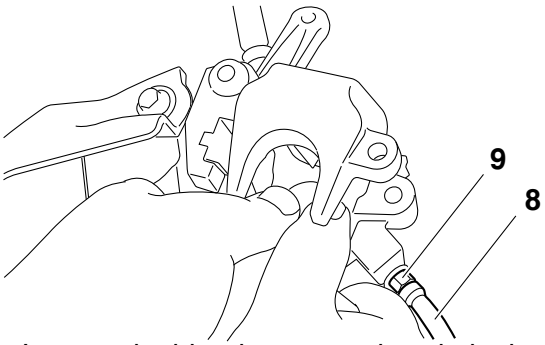

f. Loosen the bleed screw and push the brake caliper piston in.

WARNING

Do not reuse the drained brake fluid.

g. Tighten the bleed screw.

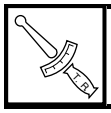

Bleed screw
6 Nm (0.6 m·kgf, 4.3 ft·lbf)

h. Install the brake pad “10” and the pad pin “11”.

TIP

- Install the brake pads with their projections “a” into the brake caliper recesses “b”.
- Temporarily tighten the pad pin at this point.

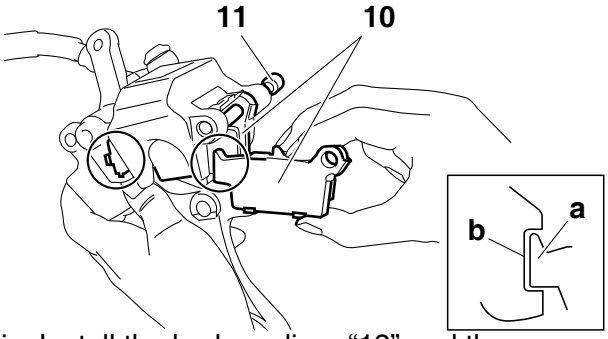

i. Install the brake caliper “12” and the rear wheel “13”.
   Refer to “REAR WHEEL” on page 5-9.
j. Tighten the pad pin “14”.

	Pad pin **17 Nm (1.7 m·kgf, 12 ft·lbf)**

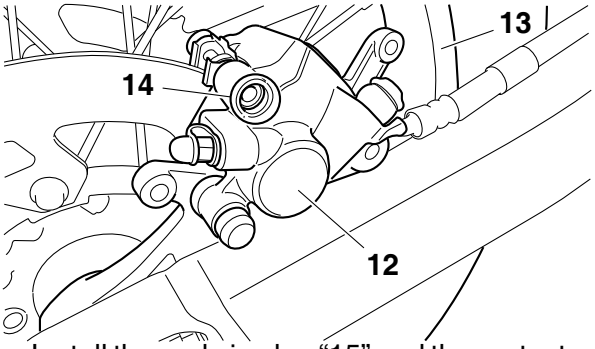

k. Install the pad pin plug “15” and the protector “16”.

	Pad pin plug **2.5 Nm (0.25 m·kgf, 1.8 ft·lbf)** **Bolt (protector)** **7 Nm (0.7 m·kgf, 5.1 ft·lbf)**

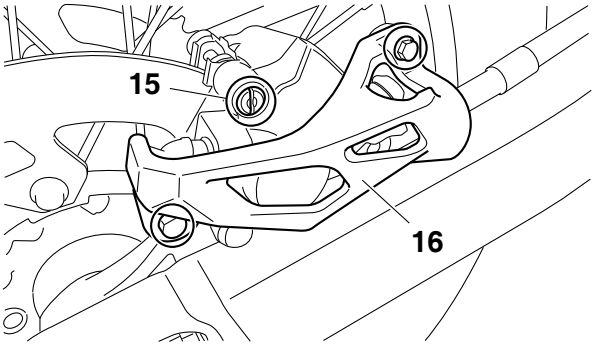

▲▲▲▲▲▲▲▲▲▲▲▲▲▲▲▲▲▲▲▲▲▲▲▲▲▲▲▲▲▲▲▲▲▲

3. Check:
   • Brake fluid level
     Refer to “CHECKING THE BRAKE FLUID LEVEL” on page 3-29.
4. Check:
   • Brake pedal operation
     A softy or spongy feeling → Bleed the brake system.
     Refer to “BLEEDING THE BRAKE SYSTEM” on page 3-24.

CHECKING THE REAR BRAKE PAD INSULATOR

1. Remove:
   • Brake pads
     Refer to “REAR BRAKE” on page 5-23.
2. Check:
   • Rear brake pad insulator “1”
     Damage → Replace.

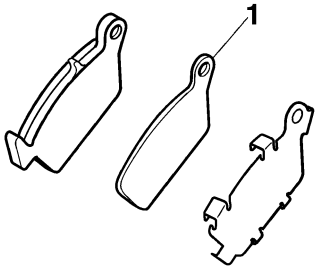

CHECKING THE BRAKE FLUID LEVEL

1. Stand the vehicle upright on a level surface.

TIP

In order to ensure a correct reading of the brake fluid level, make sure that the top of the brake fluid reservoir is horizontal.

2. Check:
   • Brake fluid level
     The minimum level mark “a” or below → Add.

	Recommended brake fluid **DOT 4**

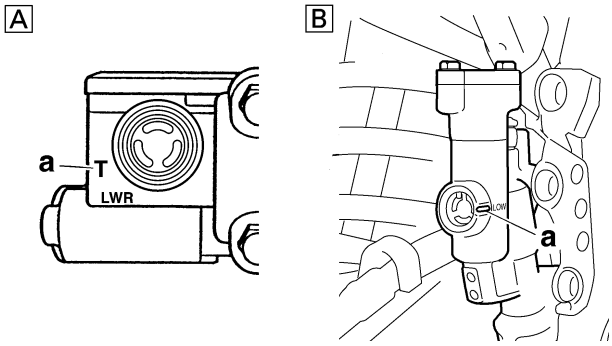

A. Front brake
B. Rear brake

WARNING

- **Use only the designated brake fluid. Other brake fluids may cause the rubber seals to deteriorate, causing leakage and poor brake performance.**
- **Refill with the same type of brake fluid that is already in the system. Mixing brake fluids may result in a harmful chemical reaction, leading to poor brake performance.**
- **When refilling, be careful that water does not enter the brake fluid reservoir. Water will significantly lower the boiling point of the brake fluid and could cause vapor lock.**

NOTICE

Brake fluid may damage painted surfaces and plastic parts. Therefore, always clean up any spilt brake fluid immediately.

ADJUSTING THE DRIVE CHAIN SLACK

NOTICE

A drive chain that is too tight will overload the engine and other vital parts, and one that is too loose can skip and damage the swingarm or cause an accident. Therefore, keep the drive chain slack within the specified limits.

1. Use a suitable stand to raise the rear wheel off the ground.

WARNING

Securely support the vehicle so that there is no danger of it falling over.

2. Shift the transmission into the neutral position.
3. Pull the drive chain up above the drive chain guide installation bolt with a force of about 50 N (5.0 kgf, 36 lbf).
4. Check:
   - Drive chain slack “a”
     Out of specification → Regulate.

TIP

Measure drive chain slack between the drive chain guide and the bottom of the chain as shown.

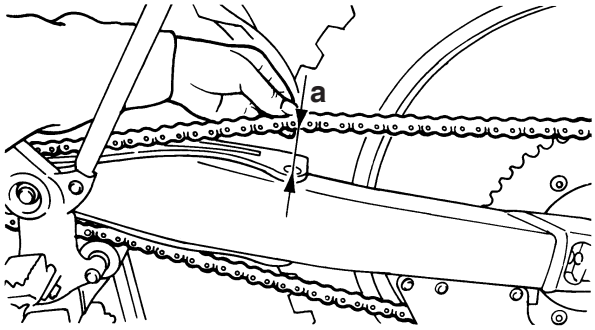

	Drive chain slack **50–60 mm (1.97–2.36 in)**

5. Adjust:
   - Drive chain slack

▼▼▼▼▼▼▼▼▼▼▼▼▼▼▼▼▼▼▼▼▼▼▼▼▼▼▼▼▼▼▼▼▼▼

a. Loosen the wheel axle nut “1”.
b. Loosen both locknuts “2”.
c. Turn the adjusting bolt “3” in direction “a” or “b” until the specified drive chain slack is obtained.

Direction “a” **The drive chain slack decreases.** **Direction “b”** **The drive chain slack increases.**

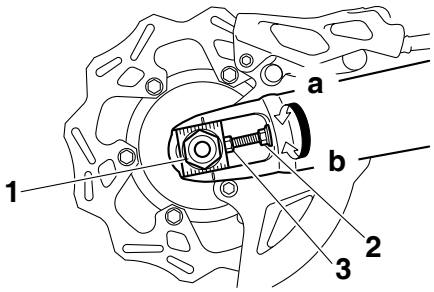

TIP

- To maintain the proper wheel alignment, adjust both sides evenly.
- Push the rear wheel forward to make sure that there is no clearance between the swingarm end plates and the ends of the swingarm.

d. Tighten the locknut.

	Locknut **21 Nm (2.1 m·kgf, 15 ft·lbf)**

e. Tighten the wheel axle nut.

	Wheel axle nut **125 Nm (12.5 m·kgf, 90 ft·lbf)**

▲▲▲▲▲▲▲▲▲▲▲▲▲▲▲▲▲▲▲▲▲▲▲▲▲▲▲▲▲▲▲▲▲▲

CHECKING THE FRONT FORK LEGS

1. Stand the vehicle upright on a level surface.

WARNING

Securely support the vehicle so that there is no danger of it falling over.

2. Check:
   - Inner tube
     Damage/scratches → Replace.
   - Front fork leg (s)
     Oil leaks between inner tube and outer tube → Replace the oil seal.
3. Hold the vehicle upright and apply the front brake.
4. Check:
   - Front fork operation
     Push down hard on the handlebar several times and check if the front fork rebounds smoothly.
     Unsmooth operation → Correct or replace.
     Refer to "FRONT FORK" on page 5-40.

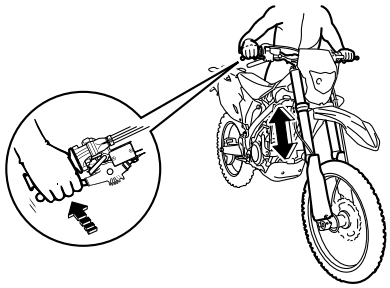

CHECKING THE FRONT FORK PROTECTOR GUIDE

1. Check:
   - Protector guide "1"
     Out of specification → Replace.

TIP

The protector guide reaches the limit of its use when it is worn down to the same height "a" as of the outer tube circumference.

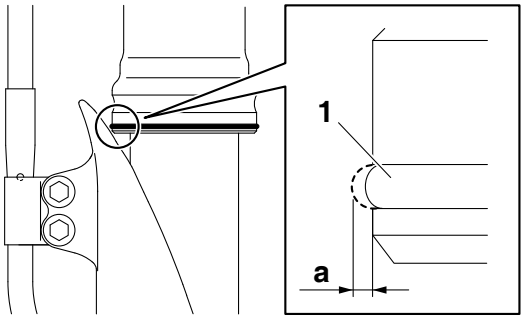

CLEANING THE FRONT FORK OIL SEAL AND DUST SEAL

1. Remove:
   - Protector
   - Dust seal "1"

NOTICE

Be careful not to damage the dust seal and the inner tube by a driver.

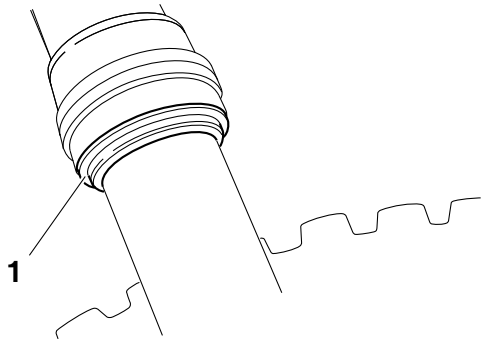

2. Clean:
   - Dust seal "a"
   - Oil seal "b"

TIP

- Clean the dust seal and oil seal after every run.
- Apply lithium-soap-based grease on the inner tube.

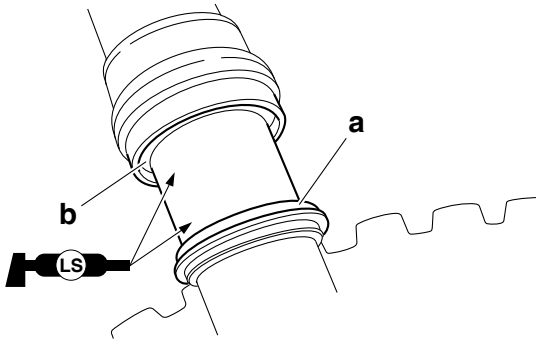

AIR BLEEDING FROM FRONT FORK

TIP

If the front fork initial movement feels stiff during a run, relieve the front fork internal pressure.

1. Use a suitable stand to raise the front wheel off the ground.

WARNING

Securely support the vehicle so that there is no danger of it falling over.

2. Remove the air bleed screw "1" and release the internal pressure from the front fork.

3. Tighten:
   • Air bleed screw

Air bleed screw
1.3 Nm (0.13 m·kgf, 0.94 ft·lbf)

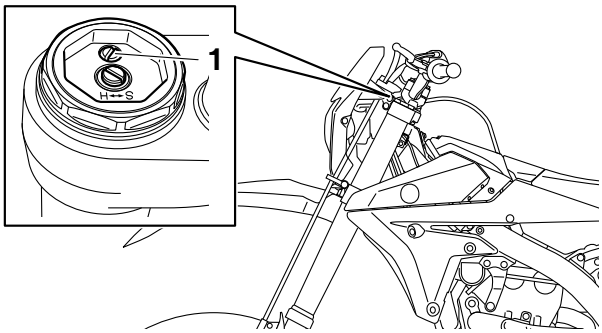

ADJUSTING THE FRONT FORK LEGS

WARNING

- **Always adjust the left and right front forks evenly. If this is not done, the vehicle may have poor stability.**
- **Securely support the vehicle so that there is no danger of it falling over.**

Rebound damping force

NOTICE

Do not turn the adjuster forcibly beyond its adjusting range.

1. Adjust:
   • Rebound damping force

▼▼▼▼▼▼▼▼▼▼▼▼▼▼▼▼▼▼▼▼▼▼▼▼▼▼▼▼▼▼▼▼▼▼

a. Turn the adjuster "1" in the direction of "a" or "b" to make an adjustment.

Direction "a"
Rebound damping force is increased (suspension is harder).
Direction "b"
Rebound damping force is decreased (suspension is softer).

Rebound damping force
Maximum
Turn it in finger-tight.
STD
Turn it out by 10 clicks.*
Minimum
Turn it out by 20 clicks.*

*** With the adjuster fully turned in**

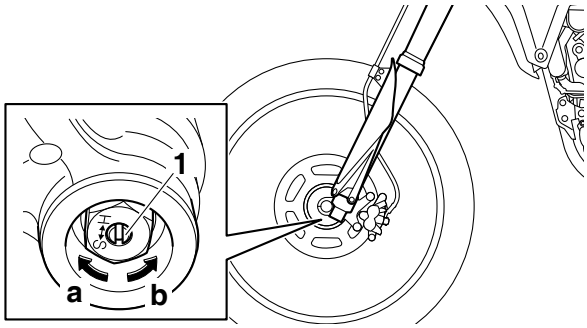

▲▲▲▲▲▲▲▲▲▲▲▲▲▲▲▲▲▲▲▲▲▲▲▲▲▲▲▲▲▲▲▲▲▲

Compression damping force

NOTICE

Do not turn the adjuster forcibly beyond its adjusting range.

1. Adjust:
   • Compression damping force

▼▼▼▼▼▼▼▼▼▼▼▼▼▼▼▼▼▼▼▼▼▼▼▼▼▼▼▼▼▼▼▼▼▼

a. Turn the adjuster "1" in the direction of "a" or "b" to make an adjustment.

Direction "a"
Compression damping force is increased (suspension is harder).
Direction "b"
Compression damping force is decreased (suspension is softer).

Compression damping force
Maximum
Turn it in finger-tight.
STD
Turn it out by 11 clicks.*
Minimum
Turn it out by 20 clicks.*

*** With the adjuster fully turned in**

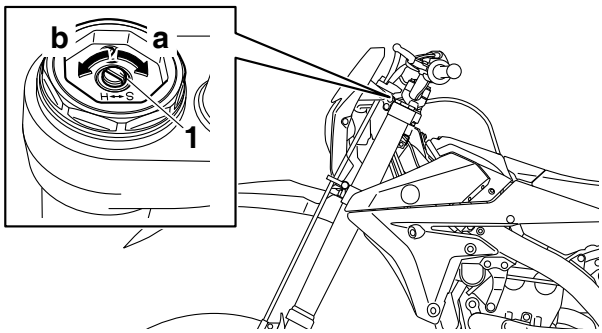

▲▲▲▲▲▲▲▲▲▲▲▲▲▲▲▲▲▲▲▲▲▲▲▲▲▲▲▲▲▲▲▲▲▲

CHECKING THE SWINGARM OPERATION

1. Check:
   - Swingarm smooth action
   - Swingarm free play
     Refer to “SWINGARM” on page 5-64.

CHECKING THE REAR SUSPENSION

1. Stand the vehicle upright on a level surface.

WARNING

Securely support the vehicle so that there is no danger of it falling over.

2. Check:
   - Rear shock absorber assembly
     Gas leaks/oil leaks → Replace the rear shock absorber assembly.
     Refer to “REAR SHOCK ABSORBER ASSEMBLY” on page 5-57.
3. Check:
   - Rear shock absorber assembly smooth action
   - Rear suspension link smooth action
     Sit astride the seat and shake your body up and down several times to check whether the rear shock absorber assembly operates smoothly.
     Unsmooth operation → Correct or replace.
     Refer to “REAR SHOCK ABSORBER ASSEMBLY” on page 5-57.

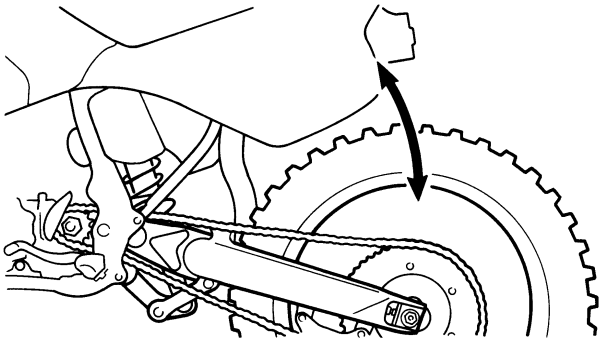

ADJUSTING THE REAR SHOCK ABSORBER ASSEMBLY

Use a suitable stand to raise the rear wheel off the ground.

WARNING

Securely support the vehicle so that there is no danger of it falling over.

Spring preload

NOTICE

Do not turn the adjuster forcibly beyond its adjusting range.

1. Remove:
   - Rear frame
     Refer to “REAR SHOCK ABSORBER ASSEMBLY” on page 5-57.
2. Adjust:
   - Spring preload

▼▼▼▼▼▼▼▼▼▼▼▼▼▼▼▼▼▼▼▼▼▼▼▼▼▼▼▼▼▼▼▼▼▼

a. Loosen the locknut “1”.
b. Loosen the adjuster “2” until there is some clearance between the spring and the adjuster.
c. Measure the spring free length “a”.

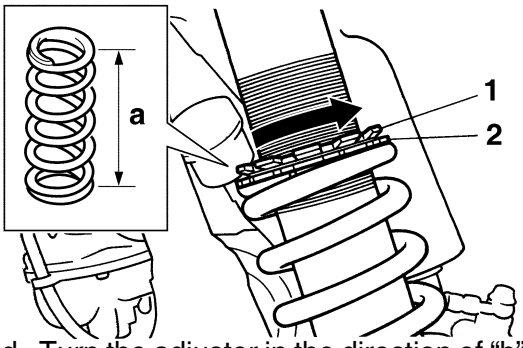

d. Turn the adjuster in the direction of “b” or “c” to make an adjustment.

Direction “b”
Spring preload is increased (suspension is harder).
Direction “c”
Spring preload is decreased (suspension is softer).

Spring installed length “d”
Minimum
Position in which the spring is turned in 1.5 mm (0.06 in) from its free length.
STD
Position in which the spring is turned in 10 mm (0.39 in) from its free length.
Maximum
Position in which the spring is turned in 18 mm (0.71 in) from its free length.

TIP

- Be sure to remove all dirt and mud from around the locknut and adjusting ring before adjustment.
- The length of the spring (installed) changes 1.5 mm (0.06 in) per turn of the adjusting ring.

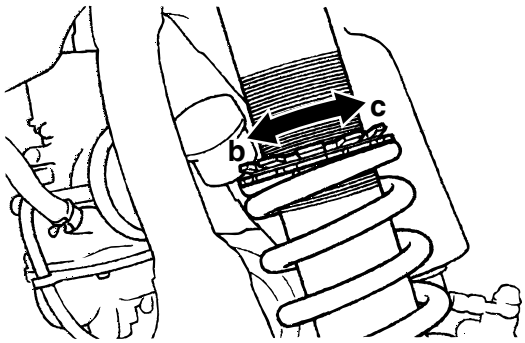

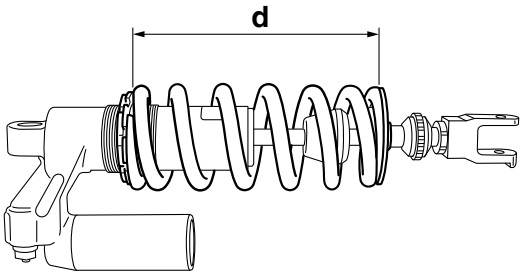

e. Tighten the locknut.

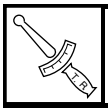

Locknut
30 Nm (3.0 m·kgf, 22 ft·lbf)

▲▲▲▲▲▲▲▲▲▲▲▲▲▲▲▲▲▲▲▲▲▲▲▲▲▲▲▲▲▲▲▲

3. Install:
   - Rear frame
     Refer to “REAR SHOCK ABSORBER ASSEMBLY” on page 5-57.

Rebound damping force

NOTICE

Do not turn the adjuster forcibly beyond its adjusting range.

1. Adjust:
   - Rebound damping force

▼▼▼▼▼▼▼▼▼▼▼▼▼▼▼▼▼▼▼▼▼▼▼▼▼▼▼▼▼▼▼▼

a. Turn the adjuster “1” in the direction of “a” or “b” to make an adjustment.

Direction “a”
Rebound damping force is increased (suspension is harder).
Direction “b”
Rebound damping force is decreased (suspension is softer).

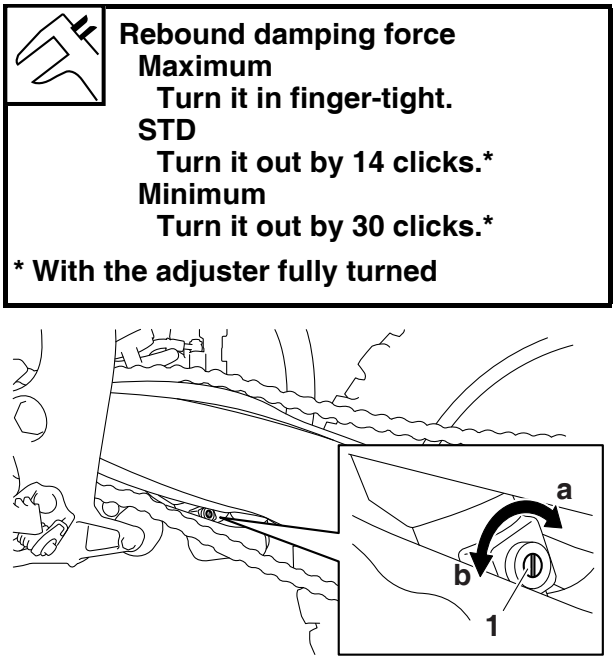

▲▲▲▲▲▲▲▲▲▲▲▲▲▲▲▲▲▲▲▲▲▲▲▲▲▲▲▲▲▲▲▲

High compression damping

NOTICE

Do not turn the adjuster forcibly beyond its adjusting range.

1. Adjust:
   - High compression damping

▼▼▼▼▼▼▼▼▼▼▼▼▼▼▼▼▼▼▼▼▼▼▼▼▼▼▼▼▼▼▼▼

a. Turn the adjuster “1” in the direction of “a” or “b” to make an adjustment.

Direction “a”
High compression damping force is increased (suspension is harder).
Direction “b”
High compression damping force is decreased (suspension is softer).

High compression damping
Maximum
Turn it in finger-tight.
STD
Turn it out by 1 1/4 turns.*
Minimum
Turn it out by two turns.*

*** With the adjuster fully turned**

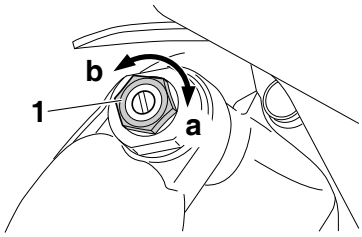

▲▲▲▲▲▲▲▲▲▲▲▲▲▲▲▲▲▲▲▲▲▲▲▲▲▲▲▲▲▲▲▲

Low compression damping

NOTICE

Do not turn the adjuster forcibly beyond its adjusting range.

1. Adjust:
   - Low compression damping

▼▼▼▼▼▼▼▼▼▼▼▼▼▼▼▼▼▼▼▼▼▼▼▼▼▼▼▼▼▼▼▼

a. Turn the adjuster "1" in the direction of "a" or "b" to make an adjustment.

Direction "a"
Low compression damping force is increased (suspension is harder).
Direction "b"
Low compression damping force is decreased (suspension is softer).

Low compression damping
Maximum
Turn it in finger-tight.
STD
Turn it out by 10 clicks.*
Minimum
Turn it out by 20 clicks.*

*** With the adjuster fully turned in**

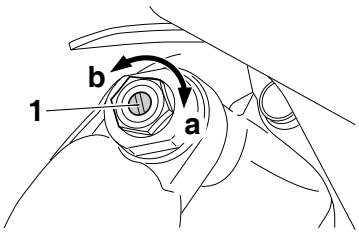

▲▲▲▲▲▲▲▲▲▲▲▲▲▲▲▲▲▲▲▲▲▲▲▲▲▲▲▲▲▲▲▲

CHECKING THE TIRES

1. Measure:
   - Tire pressure
     Out of specification → Regulate.

Tire air pressure (measured on cold tires)
100 kPa (1.00 kgf/cm^2, 15 psi)

TIP

- Check the tire while it is cold.
- Loose bead stoppers allow the tire to slip off its position on the rim when the tire pressure is low.
- If the tire valve stem is found tilted, the tire is considered to be slipping off its position. Correct the tire position.

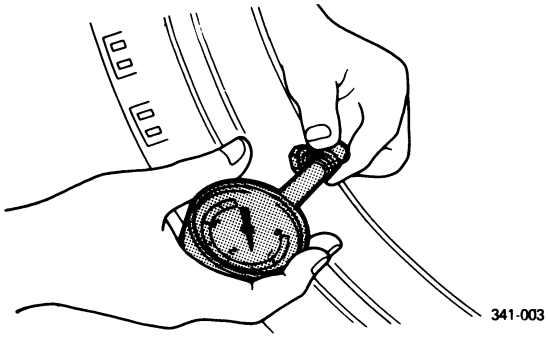

CHECKING AND TIGHTENING THE SPOKES

1. Check:
   - Spokes
     Bend/damage → Replace.
     Loose → Tighten.

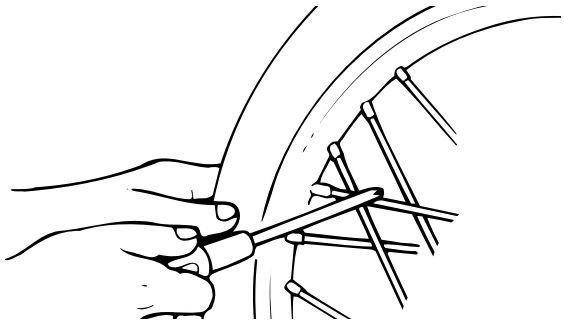

TIP

A tight spoke will emit a clear, ringing tone; a loose spoke will sound flat.

2. Tighten:
   - Spokes
     Use a spoke nipple wrench “1” for tightening.

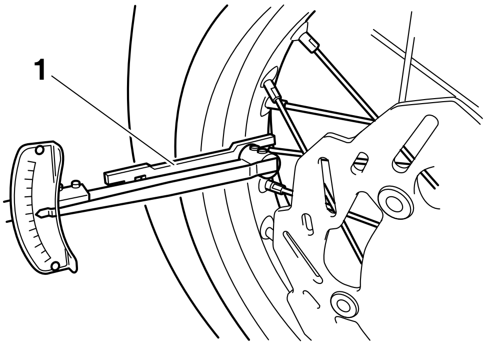

Spoke nipple wrench (6–7)
90890-01521
Spoke nipple wrench (6–7)
YM-01521

Spokes
2.5 Nm (0.25 m·kgf, 1.8 ft·lbf)

TIP

- Do not give a half turn (180 °) or more for one tightening.
- Make sure that tightening after a break-in is done until the initial looseness in nipples disappears.
- Make sure that tightening is done in stages, not at a time.

CHECKING THE WHEELS

1. Check:
   - Wheel(s)
     Damage/out-of-round → Replace.

⚠ WARNING

Never attempt to make any repairs to the wheel.

TIP

After replacing a tire or a wheel, always balance the wheel.

CHECKING THE WHEEL BEARINGS

1. Check:
   - Wheel bearings
     Refer to “CHECKING THE FRONT WHEEL” on page 5-5 and “CHECKING THE REAR WHEEL” on page 5-10.

CHECKING AND ADJUSTING THE STEERING HEAD

1. Use a suitable stand to raise the front wheel off the ground.

⚠ WARNING

Securely support the vehicle so that there is no danger of it falling over.

2. Check:
   - Steering head
     Grasp the bottom of the front fork legs and gently rock the front fork.
     Blinding/looseness → Adjust the steering head.
3. Remove:
   - Handlebar
     Refer to “HANDLEBAR” on page 5-33.
   - Upper bracket
     Refer to “STEERING HEAD” on page 5-53.
4. Adjust:
   - Steering head

▼▼▼▼▼▼▼▼▼▼▼▼▼▼▼▼▼▼▼▼▼▼▼▼▼▼▼▼▼▼▼▼▼▼▼▼

a. Remove the washer “1”.

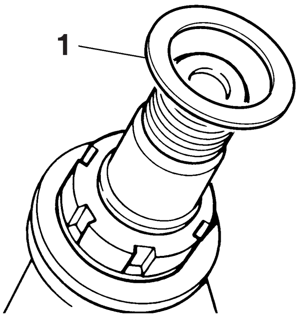

b. After loosening the ring nut “2” with a steering nut wrench “3”, tighten it to the specified torque.

TIP

- Set the torque wrench at a right angle to the steering nut wrench.
- Move the steering to the left and right a couple of times to check that it moves smoothly.

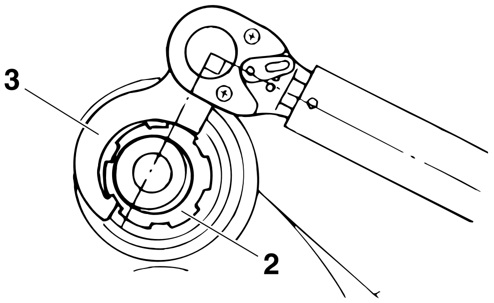

	Steering nut wrench **90890-01403** **Exhaust flange nut wrench** **YU-A9472**
	Ring nut (initial tightening torque) **38 Nm (3.8 m·kgf, 27 ft·lbf)**

c. Turn the front fork to the right and left a few times, and make sure that the steering rotates smoothly. If it does not turn smoothly, remove the lower bracket and check the upper and lower bearings.
   Refer to “STEERING HEAD” on page 5-53.
d. Loosen the ring nut fully turn and then tighten it to specification with a steering nut wrench.

WARNING

Do not overtighten the lower ring nut.

	Ring nut (final tightening torque) **7 Nm (0.7 m·kgf, 5.1 ft·lbf)**

e. Check the steering head for looseness or binding by turning the front fork all the way in both directions. If any binding is felt, remove the lower bracket and check the upper and lower bearings.
   Refer to “STEERING HEAD” on page 5-53.
f. Install the washer “1”.

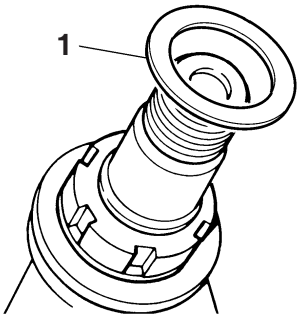

▲▲▲▲▲▲▲▲▲▲▲▲▲▲▲▲▲▲▲▲▲▲▲▲▲▲▲▲▲▲▲▲▲▲

5. Install:
   - Upper bracket
     Refer to “STEERING HEAD” on page 5-53.
   - Handlebar
     Refer to “HANDLEBAR” on page 5-33.

CHECKING AND LUBRICATING THE CABLES

The following procedure applies to all of the inner and outer cables.

WARNING

Damaged outer cable may cause the cable to corrode and interfere with its movement. Replace damaged outer cable and inner cables as soon as possible.

1. Check:
   - Outer cable
     Damage → Replace.
2. Check:
   - Cable operation
     Rough movement → Lubricate.

	Recommended lubricant **Engine oil or a suitable cable lubricant**

TIP

Hold the cable end upright and pour a few drops of lubricant into the cable sheath or use a suitable lubricating device.

LUBRICATING THE LEVERS

1. Lubricate the pivoting points and metal-to-metal moving parts of the following parts.
   - Brake lever

	Recommended lubricant **Silicone grease**

   - Clutch lever

	Recommended lubricant **Lithium-soap-based grease**

LUBRICATING THE PEDAL

1. Lubricate the pivoting point and metal-to-metal moving parts of the pedal.

	Recommended lubricant **Lithium-soap-based grease**

LUBRICATING THE DRIVE CHAIN

The drive chain consists of many interacting parts. If the drive chain is not maintained properly, it will wear out quickly. Therefore, the drive chain should be serviced, especially when the vehicle is used in dusty areas.
This vehicle has a drive chain with small rubber O-rings between each side plate. Steam cleaning, high-pressure washing, certain solvents, and the use of a coarse brush can damage these O-rings. Therefore, use only kerosene to clean the drive chain. Wipe the drive chain dry and thoroughly lubricate it with engine oil or chain lubricant that is suitable for O-ring chains. Do not use any other lubricants on the drive chain since they may contain solvents that could damage the O-rings.

	Recommended lubricant **Chain lubricant suitable for O-ring chains**

LUBRICATING THE SIDESTAND

Lubricate the pivoting point and metal-to-metal moving parts of the sidestand.

	Recommended lubricant **Lithium-soap-based grease**

CHECKING THE CHASSIS FASTENERS

Make sure that all nuts, bolts, and screws are properly tightened.
Refer to “CHASSIS TIGHTENING TORQUES” on page 2-17.

ELECTRICAL SYSTEM

CHECKING THE SPARK PLUG

1. Remove:
   - Seat
   - Air scoop (left/right)
     Refer to “GENERAL CHASSIS” on page 5-1.
   - Fuel tank “1”
     Refer to “FUEL TANK” on page 8-1.

NOTICE

Do not use too much force to pull the hose.

TIP

Remove the fuel tank, turn this 180 ° clockwise, and put it in the frame “2” as shown.

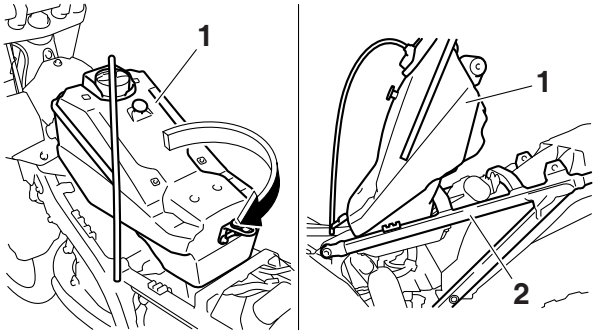

2. Remove:
   - Spark plug cap
   - Spark plug
     Refer to “CAMSHAFT” on page 6-11.

NOTICE

In order not to allow the dirt accumulated around the spark plug to drop from the spark plug hole into the cylinder, clean it before removing the spark plug.

3. Check:
   - Spark plug type
     Wrong type → Replace.

	**Manufacturer/model** **NGK/LMAR8G**

4. Check:
   - Electrode
     Damage/wear → Replace the spark plug.
   - Insulator
     Abnormal color → Replace the spark plug.
     Normal color is medium-to-light tan.
5. Clean:
   - Spark plug
     (with a spark plug cleaner or a wire brush)
6. Measure:
   - Spark plug gap “a”
     Out of specification → Adjust the spark plug gap.

	**Spark plug gap** **0.7–0.8 mm (0.028–0.031 in)**

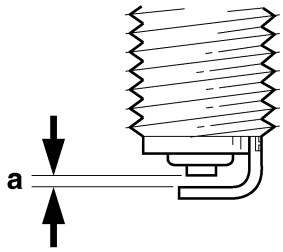

7. Install:
   - Spark plug

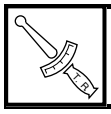	**Spark plug** **13 Nm (1.3 m·kgf, 9.4 ft·lbf)**

TIP

Before installing the spark plug, clean the spark plug and gasket surface.

8. Install:
   - Spark plug cap
   - Fuel tank
   - Air scoop (left/right)
   - Seat
   - Side cover (left/right)
     Refer to “GENERAL CHASSIS” on page 5-1.

CHECKING THE IGNITION TIMING

1. Remove:
   - Timing mark accessing screw “1”

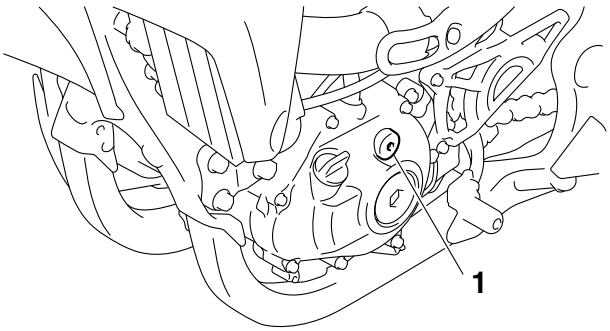

2. Attach:
   - Timing light “1”
   - Digital tachometer “2”
     To the high tension code “3”.

Timing light
90890-03141
Timing light
YU-03141
Digital tachometer
90890-06760
Digital tachometer
YU-39951-B

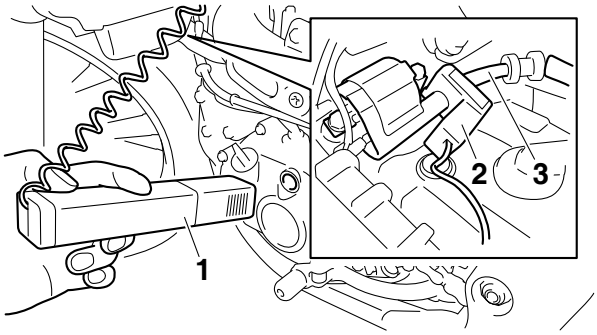

3. Adjust:
   - Engine idling speed
     Refer to “ADJUSTING THE ENGINE IDLING SPEED” on page 3-18.
4. Check:
   - Ignition timing
     Check whether the alignment mark “a” on the left crankcase cover is within the firing range “b” on the rotor.
     Incorrect firing range → Check rotor and Crankshaft position sensor.

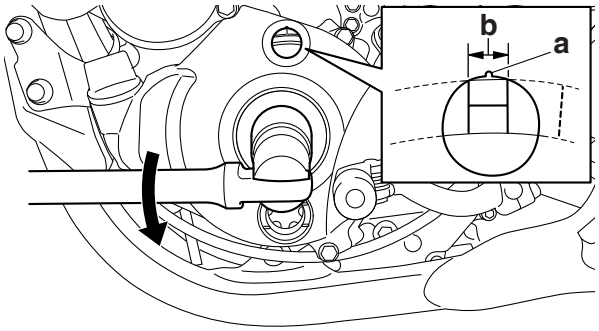

5. Install:
   - Timing mark accessing screw

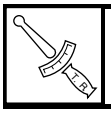

Timing mark accessing screw
6 Nm (0.6 m·kgf, 4.3 ft·lbf)

CHECKING AND CHARGING THE BATTERY
Refer to “CHECKING AND CHARGING THE BATTERY” on page 9-69.

REPLACING THE HEADLIGHT BULB

WARNING

Since the headlight bulb gets extremely hot, keep flammable products and your hands away from the bulb until it has cooled down.

1. Remove:
   - Headlight unit bolt “1”

TIP

After you have removed the headlight unit bolts, lift and remove the headlight unit.

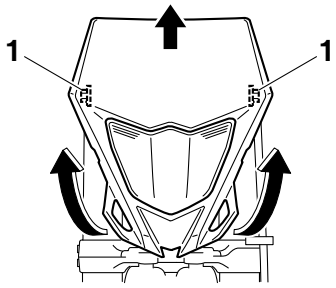

2. Remove:
   - Headlight coupler “1”
   - Bulb cover “2”

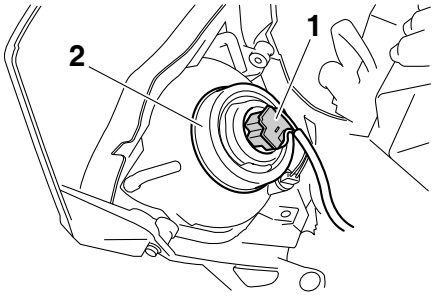

3. Remove:
   - Headlight bulb “1”

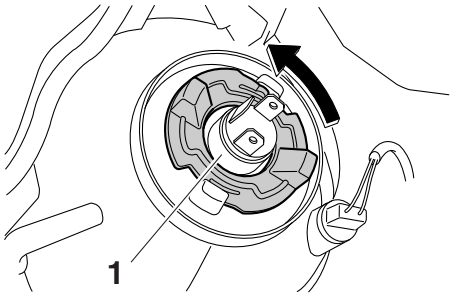

4. Install:
   - Headlight bulb New
     Fasten the new headlight bulb with the headlight bulb holder.

NOTICE

Avoid touching the glass part of the headlight bulb to keep it free from oil, otherwise the transparency of the glass, the life of the bulb and the luminous flux will be adversely affected. If the headlight bulb gets soiled, thoroughly clean it with a cloth moistened with alcohol or lacquer thinner.

5. Install:
   - Bulb cover
   - Headlight coupler
6. Install:
   - Headlight unit

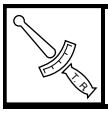	**Headlight unit bolt** **7 Nm (0.7 m·kgf, 5.1 ft·lbf)**

TUNING

CHASSIS

SELECTION OF THE SECONDARY REDUCTION RATIO (SPROCKET)

Secondary reduction ratio = Number of rear wheel sprocket teeth/Number of drive sprocket teeth

Secondary reduction ratio
3.846 (50/13)

<Requirement for selection of secondary gear reduction ratio>

- It is generally said that the secondary gear ratio should be reduced for a longer straight portion of a speed course and should be increased for a course with many corners. Actually, however, as the speed depends on the ground condition of the day of the race, be sure to run through the circuit to set the machine suitable for the entire course.
- In actuality, it is very difficult to achieve settings suitable for the entire course and some settings may be sacrificed. Thus, the settings should be matched to the portion of the course that has the greatest effect on the race result. In such a case, run through the entire course while making notes of lap times to find the best balance; then, determine the secondary reduction ratio.
- If a course has a long straight portion where a machine can run at maximum speed, the machine is generally set such that it can develop its maximum revolutions toward the end of the straight line, with care taken to avoid the engine over-revving.

TIP

Riding technique varies from rider to rider and the performance of a machine also vary from machine to machine. Therefore, do not imitate other rider's settings from the beginning but choose your own setting according to the level of your riding technique.

DRIVE AND REAR WHEEL SPROCKETS SETTING PARTS

Part name	Type	Part number
Drive sprocket "1"		
(STD)	13T	9383B-13218
Rear wheel sprocket "2"		
	48T	5GS-25448-50
(STD)	50T	5TJ-25450-80
	52T	5TJ-25452-80

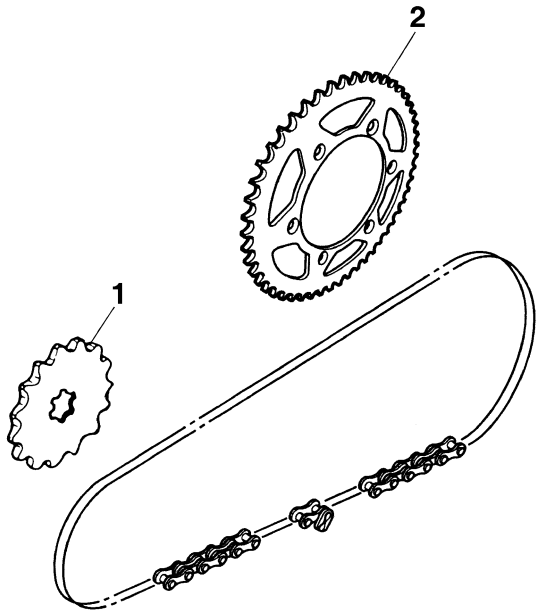

TIRE PRESSURE

Tire pressure should be adjusted to suit the road surface condition of the circuit.

Standard tire pressure
100 kPa (1.0 kgf/cm^2,15 psi)

- Under a rainy, a muddy, a sandy, or a slippery condition, the tire pressure should be lower for a larger area of contact with the road surface.

Extent of adjustment
60–80 kPa (0.6–0.8 kgf/cm^2, 9.0–12 psi)

- Under a stony or a hard road condition, the tire pressure should be higher to prevent a flat tire.

Extent of adjustment
100–120 kPa (1.0–1.2 kgf/cm^2, 15–18 psi)

FRONT FORK SETTING

The front fork setting should be made depending on the rider's feeling of an actual run and the circuit conditions.
The front fork setting includes the following three factors:

1. Setting of air spring characteristics
   - Change the fork oil amount.
2. Setting of spring preload
   - Change the spring.
3. Setting of damping force
   - Change the compression damping force.
   - Change the rebound damping force.
     The spring acts on the load and the damping force acts on the cushion travel speed.

CHANGE IN AMOUNT AND CHARACTERISTICS OF FORK OIL

Damping characteristic near the final stroke can be changed by changing the fork oil amount.

WARNING

Adjust the oil amount in 5 cm^3 (0.2 US oz, 0.2 Imp.oz) increments or decrements. Too small oil amount causes the front fork to produce a noise at full rebound or the rider to feel some pressure on his hands or body. Alternatively, too large oil amount will cause the air spring characteristics to have a tendency to be stiffer with the consequent deteriorated performance and characteristics. Therefore, adjust the front fork within the specified range.

Standard oil amount
340 cm^3 (11.50 US oz, 11.99 Imp.oz)
Extent of adjustment
300–365 cm^3 (10.14–12.34 US oz, 10.58–12.87 Imp.oz)

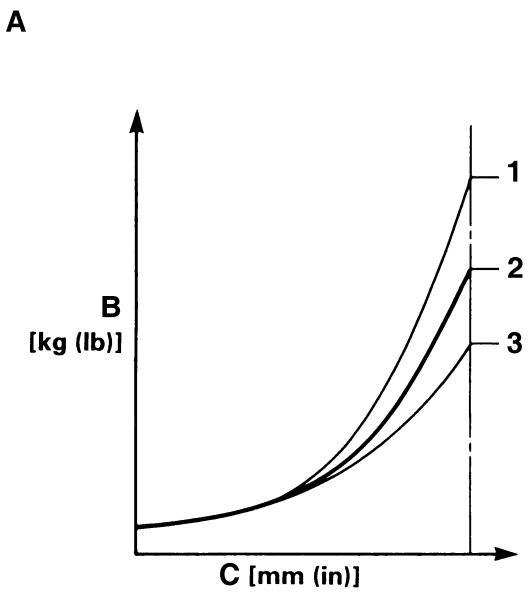

A. Air spring characteristics in relation to oil amount change
B. Load
C. Stroke
1. Max. oil amount
2. Standard oil amount
3. Min. oil amount

SETTING OF SPRING AFTER REPLACEMENT

As the front fork setting can be easily affected by the rear suspension, take care so that the front and the rear are balanced (in position etc.) when setting the front fork.

1. Use of soft spring
   - Change the rebound damping force.
     Turn out one or two clicks.
   - Change the compression damping force.
     Turn in one or two clicks.

TIP

Generally a soft spring gives a soft riding feeling. Rebound damping tends to become stronger and the front fork may sink deeply over a series of gaps.

2. Use of stiff spring
   - Change the rebound damping force.
     Turn in one or two clicks.
   - Change the compression damping force.
     Turn out one or two clicks.

TIP

Generally a stiff spring gives a stiff riding feeling. Rebound damping tends to become weaker, resulting in lack of a sense of contact with the road surface or in a vibrating handlebar.

FRONT FORK SETTING PARTS

• Front fork spring "1"

Type	Spring rate N/mm	Part number	I.D. Mark (slits)
SOFT	4.1	2GB-23141-A0	|||
	4.2	2GB-23141-B0	||||
	4.3	2GB-23141-C0	|||||
STD	4.4	2GB-23141-30	—
		2GB-23141-D0	|-|
STIFF	4.5	2GB-23141-E0	|-||
	4.6	33D-23141-30	|-|||

TIP

The I.D. mark (slits) "a" is proved on the end of the spring.

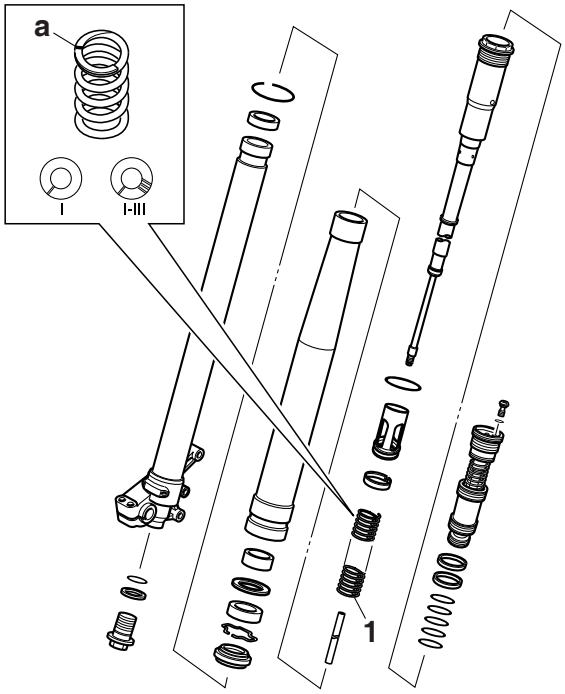

REAR SUSPENSION SETTING

The rear shock absorber setting should be made depending on the rider's feeling of an actual run and the circuit conditions.
The rear suspension setting includes the following two factors:

1. Setting of spring preload
   • Change the set length of the spring.
   • Change the spring.
2. Setting of damping force
   • Change the rebound damping force.
   • Change the compression damping force.

CHOOSING SET LENGTH

1. Place a stand or a block under the engine to put the rear wheel above the floor, and measure the length "a" between the rear wheel axle center and the rear fender holding bolt.

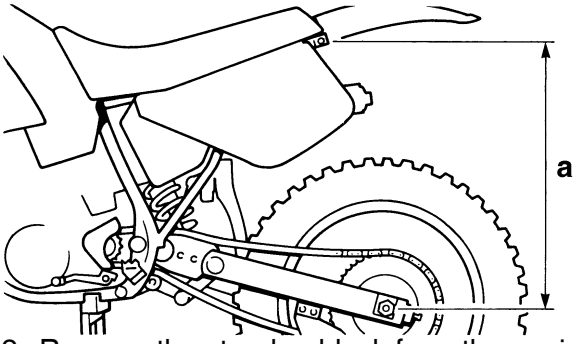

2. Remove the stand or block from the engine and, with a rider astride the seat, measure the sunken length "b" between the rear wheel axle center and the rear fender holding bolt.

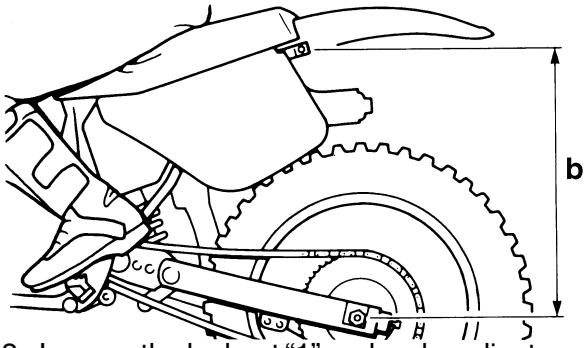

3. Loosen the locknut "1" and make adjustment by turning the adjuster "2" to achieve the standard figure from the subtraction of the length "b" from the length "a".

Standard figure
90–100 mm (3.5–3.9 in)

TIP

- If the machine is new and after it is broken in, the same set length of the spring may change because of the initial fatigue, etc. of the spring. Therefore, be sure to make reevaluation.
- If the standard figure cannot be achieved by adjusting the adjuster and changing the set length, replace the spring with an optional one and make readjustment.

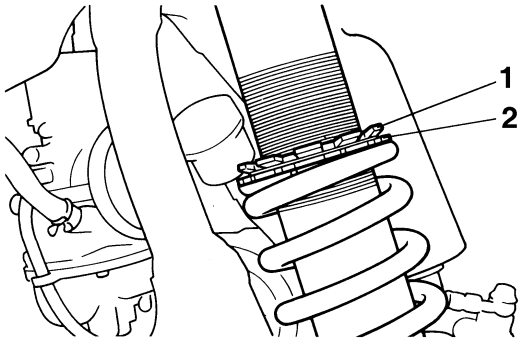

SETTING OF SPRING AFTER REPLACEMENT

After replacement, be sure to adjust the spring to the set length [sunken length 90–100 mm (3.5–3.9 in)] and set it.

1. Use of soft spring
   - Adjust to decrease rebound damping force to compensate for less spring load. Run with the rebound damping force adjuster one or two clicks turned out, and readjust it to suit your preference.
2. Use of stiff spring
   - Adjust to increase rebound damping force to compensate for greater spring load. Run with the rebound damping force adjuster one or two clicks turned in, and readjust it to suit your preference.

TIP

Adjusting the rebound damping force will be followed more or less by a change in the compression damping force. For correction, adjust to decrease compression damping force.

WARNING

When using a rear shock absorber other than currently installed, use the one whose overall length "a" does not exceed the standard as it may result in faulty performance. Never use one whose overall length is greater than standard.

Length "a" of standard shock 462.5 mm (18.21 in)

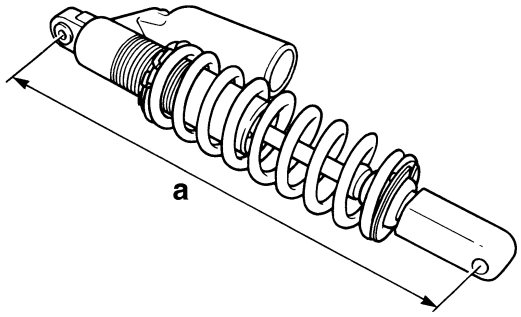

REAR SHOCK ABSORBER SETTING PARTS

- Rear shock spring "1"

Type	Spring rate N/mm	Part number	I.D. Mark
SOFT	48	2GB-22212-10 (Blue)	Black
	50	2GB-22212-00 (Blue)	Green
	52	1SL-22212-40 (Blue)	Yellow
STD	54	1SL-22212-60 (Blue)	Pink
STIFF	56	1SL-22212-20 (Blue)	White
	58	1SL-22212-00 (Blue)	Silver
	60	1SL-22212-80 (Blue)	Brown

TIP

- The I.D. mark "a" is marked at the end of the spring.
- Spring specification varies according to the color of I.D. marks.

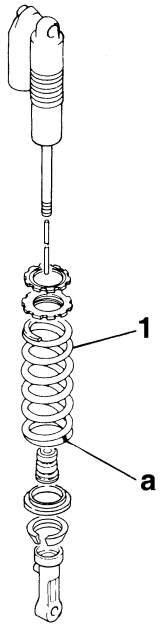

• Extent of adjustment (spring preload)

Maximum	Minimum
Position in which the spring is turned in 18 mm (0.71 in) from its free length.	**Position in which the spring is turned in 1.5 mm (0.06 in) from its free length.**

TIP

For the spring preload adjustment, refer to “ADJUSTING THE REAR SHOCK ABSORBER ASSEMBLY” on page 3-33.

SUSPENSION SETTING (FRONT FORK)

TIP

- If any of the following symptoms is experienced with the standard position as the base, make resetting by reference to the adjustment procedure given in the same chart.
- Before any change, set the rear shock absorber sunken length to the standard figure 90–100 mm (3.5–3.9 in).

Symptom	Section				Check	Adjust
	Jump	Large gap	Medium gap	Small gap		
Stiff over entire range	○	○	○		Compression damping force Oil amount Spring	Turn adjuster counterclockwise (about 2 clicks) to decrease damping. Decrease oil amount by about 5–10 cm^3 (0.2–0.3 US oz, 0.2–0.4 Imp.oz). Replace with soft spring.
Unsmooth movement over entire range	○	○	○	○	Outer tube Inner tube Slide metal Piston metal Lower bracket tightening torque	Check for any bends, dents, other noticeable scars, etc. If any, replace affected parts. Replace with a new one for extended use. Replace with a new one for extended use. Retighten to specified torque.
Poor initial movement				○	Rebound damping force Oil seals	Turn adjuster counterclockwise (about 2 clicks) to decrease damping. Apply grease in oil seal wall.
Soft over entire range, bottoming out	○	○			Compression damping force Oil amount Spring	Turn adjuster clockwise (about 2 clicks) to increase damping. Increase oil amount by about 5–10 cm^3 (0.2–0.3 US oz, 0.2–0.4 Imp.oz). Replace with stiff spring.
Stiff toward stroke end	○				Oil amount	Decrease oil amount by about 5 cm^3 (0.2 US oz, 0.2 Imp.oz).
Soft toward stroke end, bottoming out	○				Oil amount	Increase oil amount by about 5 cm^3 (0.2 US oz, 0.2 Imp.oz).
Stiff initial movement	○	○	○	○	Compression damping force	Turn adjuster counterclockwise (about 2 clicks) to decrease damping.

Symptom	Section				Check	Adjust
	Jump	Large gap	Medium gap	Small gap		
Low front, tending to lower front posture			○	○	Compression damping force Rebound damping force Balance with rear end Oil amount	Turn adjuster clockwise (about 2 clicks) to increase damping. Turn adjuster counterclockwise (about 2 clicks) to decrease damping. Set sunken length for 95–100 mm (3.7–3.9 in) when one passenger is astride seat (lower rear posture). Increase oil amount by about 5 cm^3 (0.2 US oz, 0.2 Imp.oz).
"Obtrusive" front, tending to upper front posture			○	○	Compression damping force Balance with rear end Spring Oil amount	Turn adjuster counterclockwise (about 2 clicks) to decrease damping. Set sunken length for 90–95 mm (3.5–3.7 in) when one passenger is astride seat (upper rear posture). Replace with soft spring. Decrease oil amount by about 5–10 cm^3 (0.2–0.3 US oz, 0.2–0.4 Imp.oz).

SUSPENSION SETTING (REAR SHOCK ABSORBER)

TIP

- If any of the following symptoms is experienced with the standard position as the base, make resetting by reference to the adjustment procedure given in the same chart.
- Adjust the rebound damping in 2-click increments or decrements.
- Adjust the low compression damping in 1-click increments or decrements.
- Adjust the high compression damping in 1/6 turn increments or decrements.

Symptom	Section				Check	Adjust
	Jump	Large gap	Medium gap	Small gap		
Stiff, tending to sink			○	○	Rebound damping force Spring set length	Turn adjuster counterclockwise (about 2 clicks) to decrease damping. Set sunken length for 90–100 mm (3.5–3.9 in) when one passenger is astride seat.
Spongy and unstable			○	○	Rebound damping force Low compression damping Spring	Turn adjuster clockwise (about 2 clicks) to increase damping. Turn adjuster clockwise (about 1 click) to increase damping. Replace with stiff spring.

Symptom	Section				Check	Adjust
	Jump	Large gap	Medi-um gap	Small gap		
Heavy and dragging			○	○	Rebound damping force Spring	Turn adjuster counterclockwise (about 2 clicks) to decrease damping. Replace with soft spring.
Poor road gripping				○	Rebound damping force Low compression damping High compression damping Spring set length Spring	Turn adjuster counterclockwise (about 2 clicks) to decrease damping. Turn adjuster clockwise (about 1 click) to increase damping. Turn adjuster clockwise (about 1/6 turn) to increase damping. Set sunken length for 90–100 mm (3.5–3.9 in) when one passenger is astride seat. Replace with soft spring.
Bottoming out	○	○			High compression damping Spring set length Spring	Turn adjuster clockwise (about 1/6 turn) to increase damping. Set sunken length for 90–100 mm (3.5–3.9 in) when one passenger is astride seat. Replace with stiff spring.
Bouncing	○	○			Rebound damping force Spring	Turn adjuster clockwise (about 2 clicks) to increase damping. Replace with soft spring.
Stiff travel	○	○			High compression damping Spring set length Spring	Turn adjuster counterclockwise (about 1/6 turn) to decrease damping. Set sunken length for 90–100 mm (3.5–3.9 in) when one passenger is astride seat. Replace with soft spring.

CHASSIS

TIP

This section is intended for those who have basic knowledge and skill concerning the servicing of Yamaha motorcycles (e.g., Yamaha dealers, service engineers, etc.). Those who have little knowledge and skill concerning servicing are requested not to undertake inspection, adjustment, disassembly, or reassembly only by reference to this manual. It may lead to servicing trouble and mechanical damage.

GENERAL CHASSIS

Removing the seat and side cover

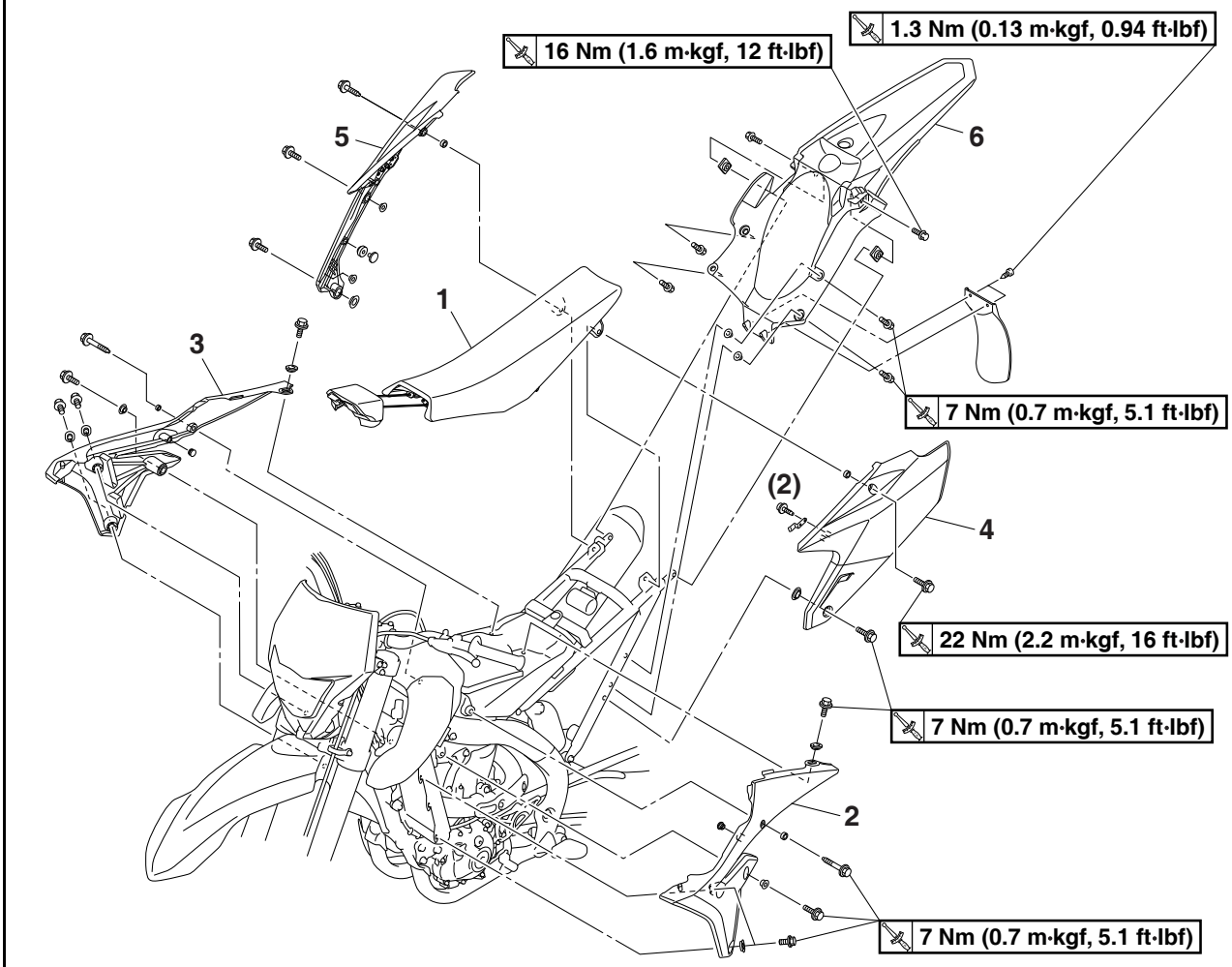

Order	Part name	Q'ty	Remarks
1	Seat	1	
2	Air scoop (left)	1	
3	Air scoop (right)	1	
4	Side cover (left)	1	
5	Side cover (right)	1	
6	Rear fender	1	
			For installation, reverse the removal procedure.

Removing the headlight assembly and multi-function meter

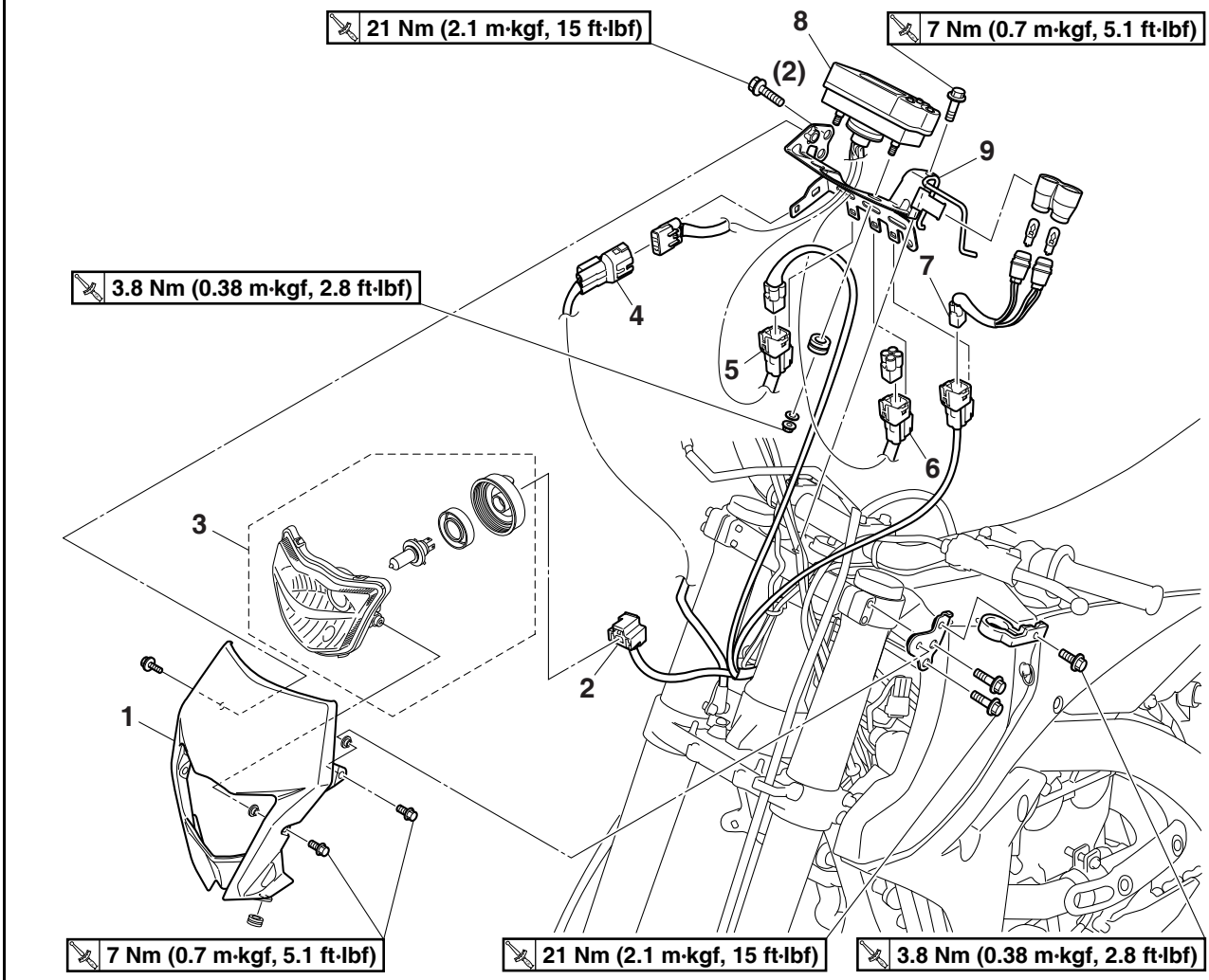

Order	Job/Parts to remove	Q'ty	Remarks
1	Headlight body	1	
2	Headlight coupler	1	Disconnect.
3	Headlight unit	1	
4	Speed sensor coupler	1	Disconnect.
5	Multi-function meter coupler	2	Disconnect.
6	Multi-function meter optional switch coupler	1	Disconnect.
7	Indicator light coupler	1	Disconnect.
8	Multi-function meter	1	
9	Meter bracket	1	

REMOVING THE LEFT SIDE COVER

1. Remove:
   - Bolt (side cover)
   - Side cover “1”

TIP

Draw the left side cover “1” backward to remove it because its projection “a” is inserted in the rear frame.

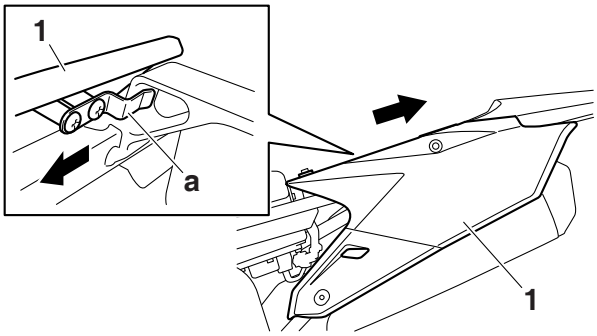

REMOVING THE SEAT

TIP

The fuel tank cap cover and the seat are coupled with each other with a plastic band.
When removing the seat, always remove the fuel tank cap cover beforehand.

1. Remove:
   - Fuel tank cap cover “1”
     Refer to “FUEL TANK CAP” on page 1-23.

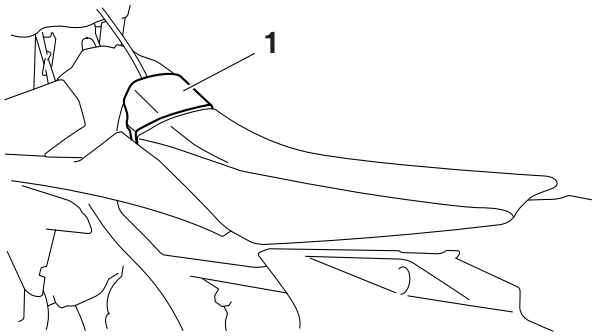

2. Remove:
   - Seat “1”

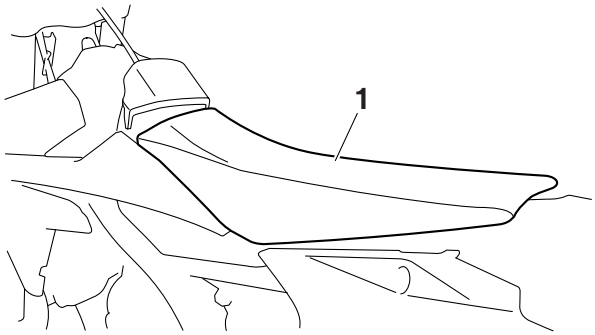

FRONT WHEEL

Removing the front wheel

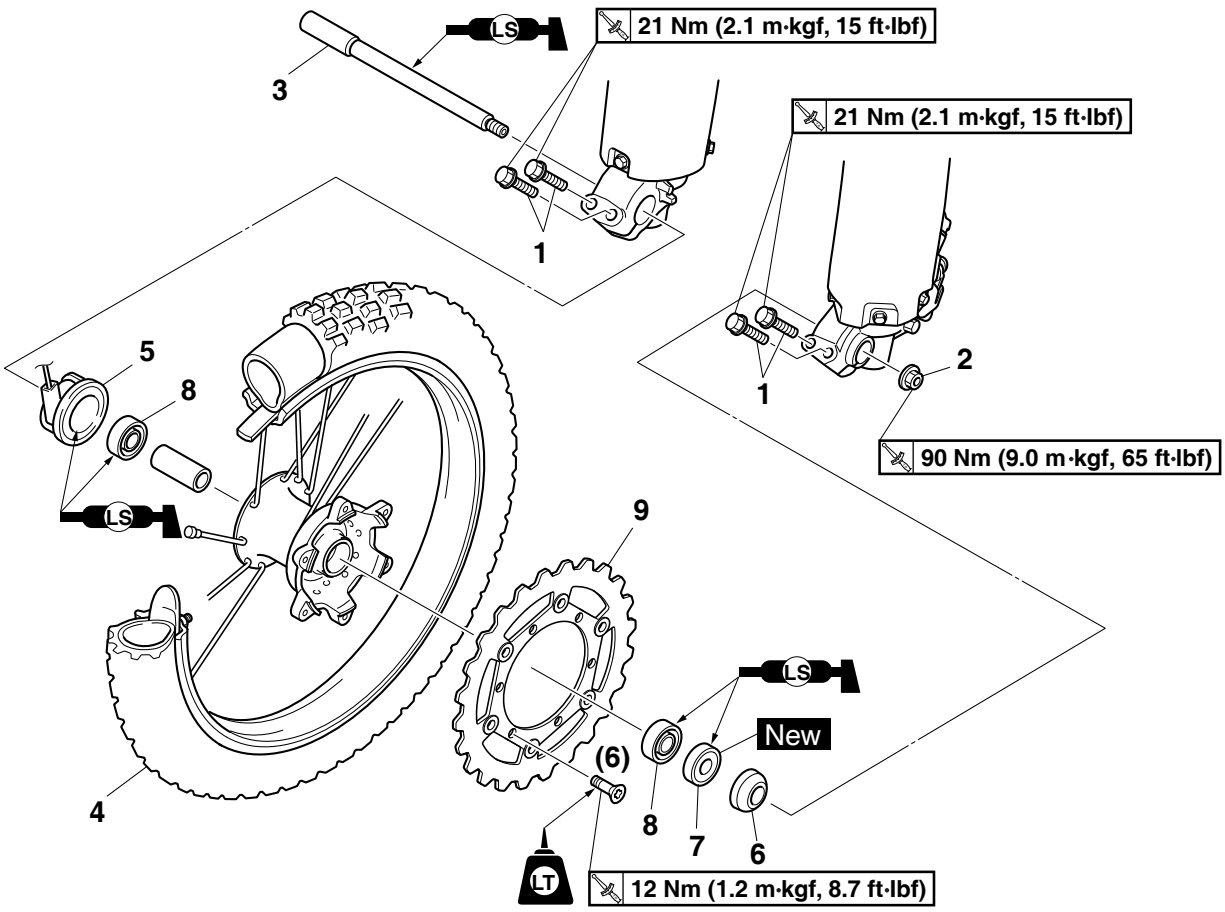

Order	Part name	Q'ty	Remarks
			Use a suitable stand to raise the front wheel off the ground.
1	Front wheel axle pinch bolt	4	Loosen.
2	Front wheel axle nut	1	
3	Front wheel axle	1	
4	Front wheel	1	
5	Speed sensor	1	
6	Collar	1	
7	Oil seal	1	
8	Bearing	2	
9	Brake disc	1	
			For installation, reverse the removal procedure.

REMOVING THE FRONT WHEEL

1. Use a suitable stand to raise the front wheel off the ground.

WARNING

Securely support the vehicle so that there is no danger of it falling over.

2. Remove:
   - Front wheel

CHECKING THE FRONT WHEEL

1. Check:
   - Front wheel axle
     Roll the front wheel axle on a flat surface.
     Bends → Replace.

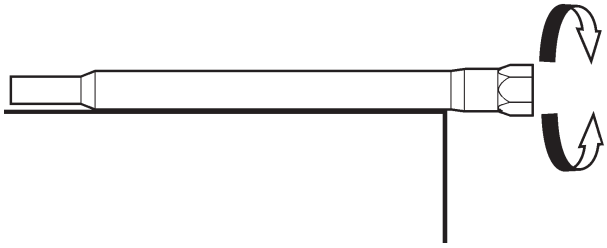

WARNING

Do not attempt to straighten a bent wheel axle.

2. Check:
   - Tire(s)
   - Front wheel
     Damage/wear → Replace.
     Refer to "CHECKING THE TIRES" on page 3-35 and "CHECKING THE WHEELS" on page 3-36.
3. Check:
   - Spokes
     Bend/damage → Replace.
     Loose → Tighten.
     Tap the spokes with a screwdriver.

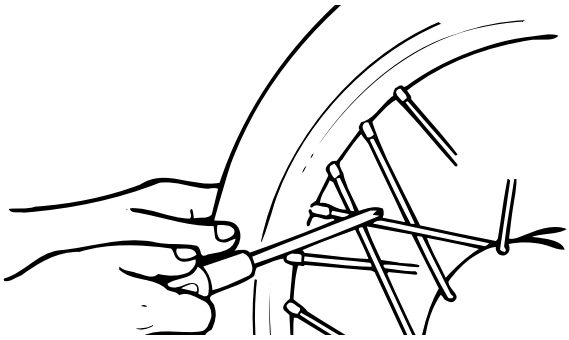

TIP

A tight spoke will emit a clear, ringing tone; a loose spoke will sound flat.

4. Tighten:
   - Spokes
     Refer to "CHECKING AND TIGHTENING THE SPOKES" on page 3-35.

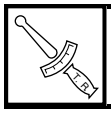	**Spokes** **2.5 Nm (0.25 m·kgf, 1.8 ft·lbf)**

TIP

After tightening the spokes, measure the wheel runout.

5. Measure:
   - Wheel radial runout "a"
   - Wheel lateral runout "b"
     Out of specification → Repair/replace.

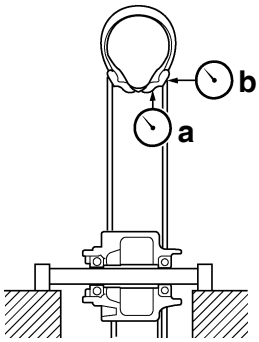

	**Radial wheel runout limit** **2.0 mm (0.08 in)** **Lateral wheel runout limit** **2.0 mm (0.08 in)**

6. Check:
   - Collars
     Damage/wear → Replace.
7. Check:
   - Bearing
     Front wheel turns roughly or is loose → Replace the wheel bearings.
   - Oil seals
     Damage/wear → Replace.

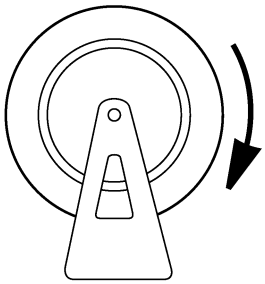

DISASSEMBLING THE FRONT WHEEL

1. Remove:
   - Oil seals
   - Bearings

▼▼▼▼▼▼▼▼▼▼▼▼▼▼▼▼▼▼▼▼▼▼▼▼▼▼▼▼▼▼▼▼▼▼

a. Clean the outside of the front wheel hub.
b. Remove the oil seals “1” with a flat-head screwdriver.

TIP

To prevent damaging the wheel, place a rag “2” between the screwdriver and the wheel surface.

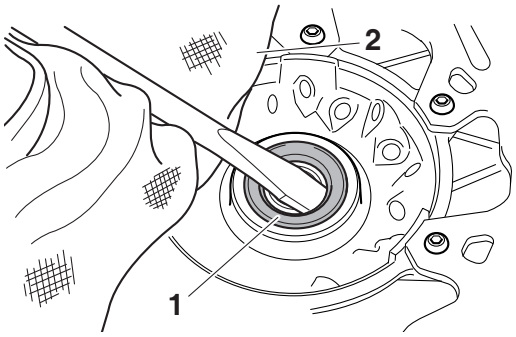

c. Remove the bearings with a bearing puller.

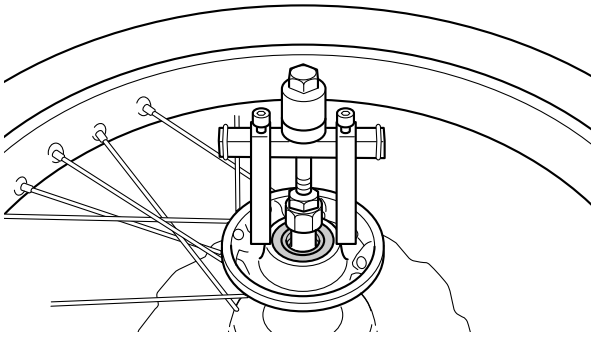

▲▲▲▲▲▲▲▲▲▲▲▲▲▲▲▲▲▲▲▲▲▲▲▲▲▲▲▲▲▲▲▲▲▲

ASSEMBLING THE FRONT WHEEL

1. Install:
   - Bearing (left side) “1”
   - Spacer “2”
   - Bearing (right side) “3”
   - Oil seal “4” New

TIP

- Apply the lithium-soap-based grease to the bearing and the oil seal lip when installing.
- Left side of bearing shall be installed first.
- Install the oil seal with its manufacture’s marks or numbers facing outward.

NOTICE

Install the bearing by pressing its outer race parallel.

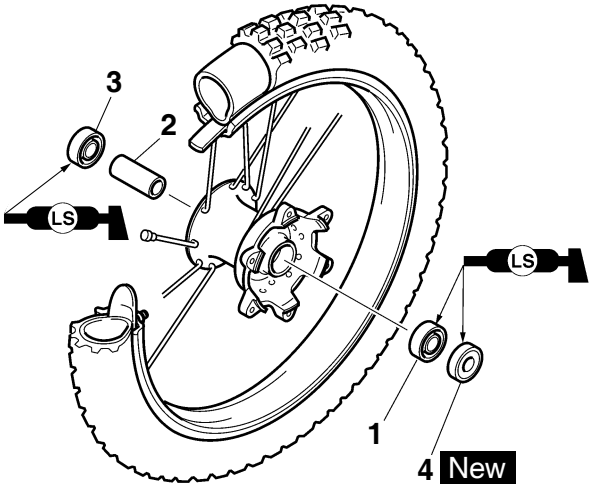

TIP

Use a socket “1” that matches the diameter of the bearing outer race and that of the oil seal.

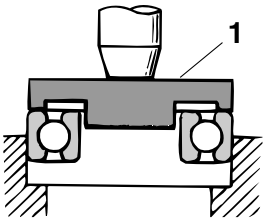

2. Install:
   - Brake disc “1”
   - Brake disc bolt “2”

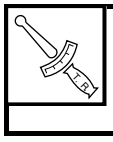

Brake disc bolt
12 Nm (1.2 m·kgf, 8.7 ft·lbf)
LOCTITE®

TIP

Tighten the bolts in stages and in a crisscross pattern.

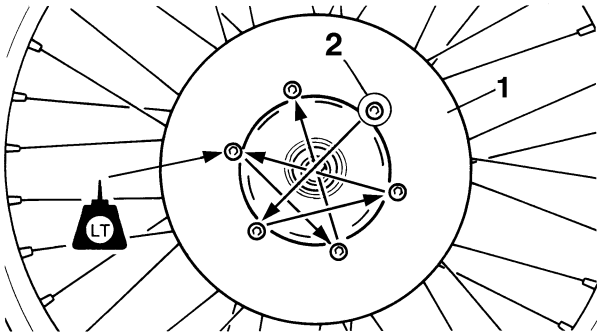

3. Install:
   - Collar “1”

TIP

Apply the lithium-soap-based grease on the oil seal lip.

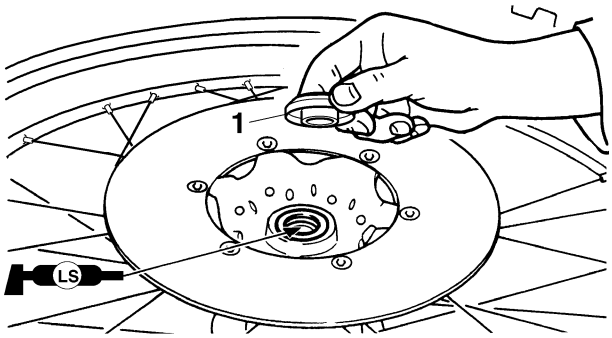

4. Install:
   - Speed sensor “1”

TIP

Apply the lithium-soap-based grease on the oil seal lip of speed sensor.
Make sure the two projections “a” in the wheel hub are meshed with the two slots “b” in the speed sensor.

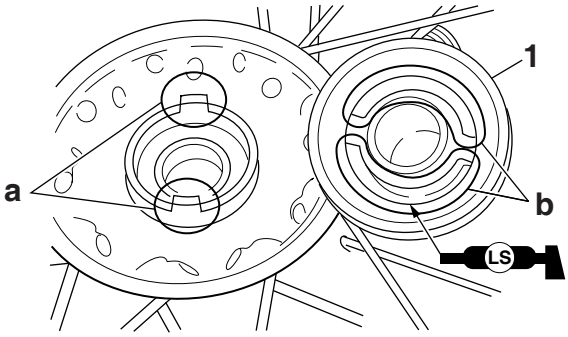

INSTALLING THE FRONT WHEEL

1. Install:
   - Front wheel

TIP

Install the brake disc “1” between the brake pads “2” correctly.

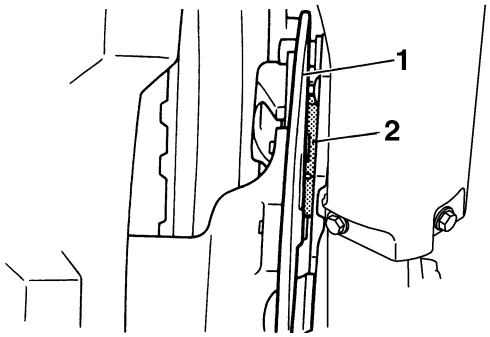

2. Install:
   - Front wheel axle “1”

TIP

Apply the lithium-soap-based grease to the front wheel axle.

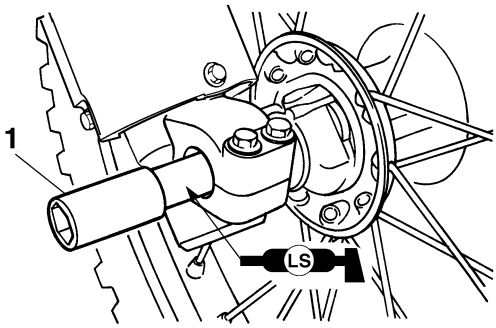

3. Tighten:
   - Front wheel axle nut “1”

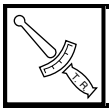	**Front wheel axle nut** **90 Nm (9.0 m·kgf, 65 ft·lbf)**

NOTICE

Before tightening the front wheel axle nut, push down hard on the handlebar(s) several times and check if the front fork rebounds smoothly.

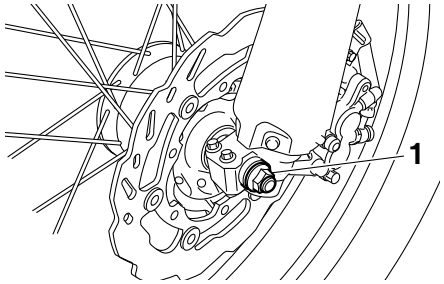

4. Tighten:
   - Front wheel axle pinch bolt “1”

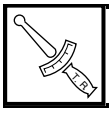	**Front wheel axle pinch bolt** **21 Nm (2.1 m·kgf, 15 ft·lbf)**

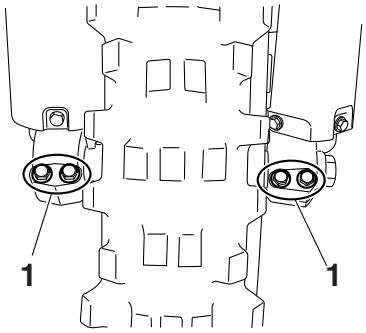
1
1

REAR WHEEL

Removing the rear wheel

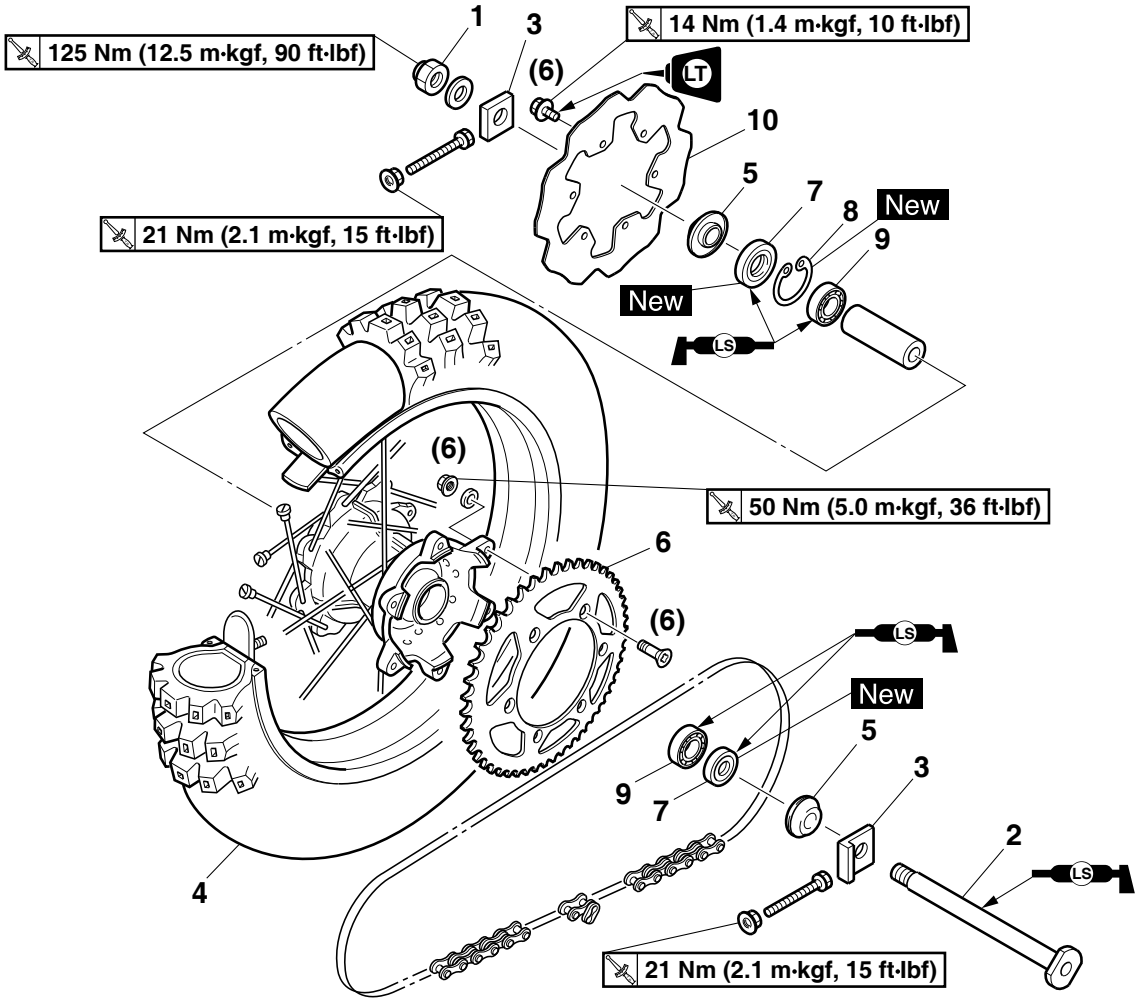

Order	Part name	Q'ty	Remarks
			Use a suitable stand to raise the rear wheel off the ground.
1	Nut (rear wheel axle)	1	
2	Rear wheel axle	1	
3	Drive chain puller	2	
4	Rear wheel	1	
5	Collars	2	
6	Rear wheel sprocket	1	
7	Oil seals	2	
8	Circlip	1	
9	Bearing	3	
10	Brake disc	1	
			For installation, reverse the removal procedure.

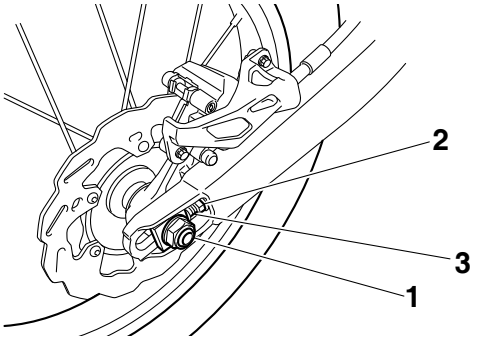

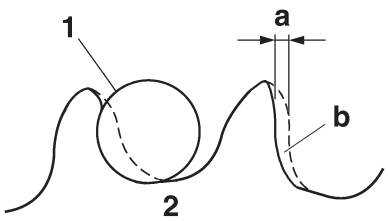

REMOVING THE REAR WHEEL

1. Use a suitable stand to raise the rear wheel off the ground.

⚠ WARNING

Securely support the vehicle so that there is no danger of it falling over.

2. Remove:
   - Rear wheel axle nut “1”
3. Loosen:
   - Locknut “2”
4. Tighten:
   - Adjusting bolt “3”

5. Remove:
   - Rear wheel axle
   - Rear wheel

TIP

- Push the rear wheel forward and remove the drive chain from the rear wheel sprocket.
- Do not depress the brake pedal with the rear wheel removed.

CHECKING THE REAR WHEEL

1. Check:
   - Rear wheel axle
   - Rear wheel
   - Bearing
   - Oil seals

   Refer to “CHECKING THE FRONT WHEEL” on page 5-5.
2. Check:
   - Tire(s)
   - Rear wheel

   Damage/wear → Replace.
   Refer to “CHECKING THE TIRES” on page 3-35 and “CHECKING THE WHEELS” on page 3-36.
3. Check:
   - Spokes

   Refer to “CHECKING THE FRONT WHEEL” on page 5-5.
4. Measure:
   - Radial wheel runout
   - Lateral wheel runout

   Refer to “CHECKING THE FRONT WHEEL” on page 5-5.

Radial wheel runout limit
2.0 mm (0.08 in)
Lateral wheel runout limit
2.0 mm (0.08 in)

DISASSEMBLING THE REAR WHEEL

1. Remove:
   - Oil seals
   - Bearing

   Refer to “DISASSEMBLING THE FRONT WHEEL” on page 5-6.

CHECKING AND REPLACING THE REAR WHEEL SPROCKET

1. Check:
   - Rear wheel sprocket

   More than 1/4 tooth wear “a” → Replace the rear wheel sprocket and the drive sprocket as a set.
   Bent tooth → Replace the rear wheel sprocket and the drive sprocket as a set.

b. Correct

1. Drive chain roller
2. Rear wheel sprocket

2. Replace:
   - Rear wheel sprocket

▼▼▼▼▼▼▼▼▼▼▼▼▼▼▼▼▼▼▼▼▼▼▼▼▼▼▼▼▼▼▼▼▼▼▼▼

a. Remove the self-locking nuts and the rear wheel sprocket.
b. Clean the rear wheel drive hub with a clean cloth, especially the surfaces that contact the sprocket.
c. Install the new rear wheel sprocket.

Rear wheel sprocket self-locking nut
50 Nm (5.0 m·kgf, 36 ft·lbf)

TIP

Tighten the self-locking nuts in stages and in a crisscross pattern.

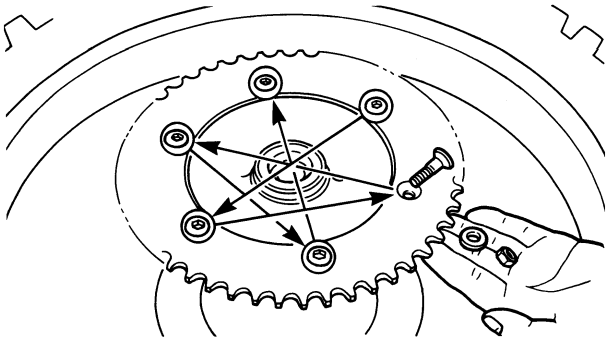

▲▲▲▲▲▲▲▲▲▲▲▲▲▲▲▲▲▲▲▲▲▲▲▲▲▲▲▲▲▲▲▲▲▲

ASSEMBLING THE REAR WHEEL

1. Install:
   - Bearing (right side) “1”
   - Circlip “2” New
   - Spacer “3”
   - Bearing (left side) “4”
   - Oil seals “5” New

TIP

- Apply the lithium-soap-based grease to the bearing and the oil seal lip when installing.
- Install the bearing with seal facing outward.
- Right side of bearing shall be installed first.
- Install the oil seal with its manufacture’s marks or numbers facing outward.

NOTICE

Install the bearing by pressing its outer race parallel.

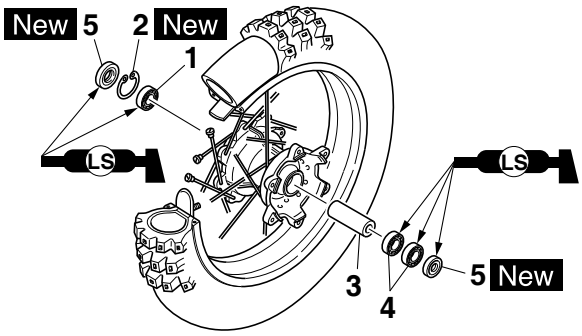

TIP

Use a socket “1” that matches the diameter of the bearing outer race and that of the oil seal.

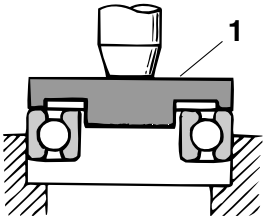

2. Install:
   - Brake disc “1”
   - Brake disc bolt “2”

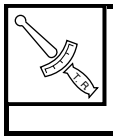

Brake disc bolt
14 Nm (1.4 m·kgf, 10 ft·lbf)
LOCTITE®

TIP

Tighten the bolts in stages and in a crisscross pattern.

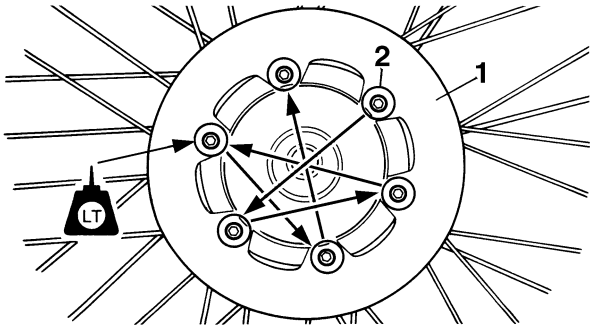

3. Install:
   - Collar “1”

TIP

Apply the lithium-soap-based grease on the oil seal lip.

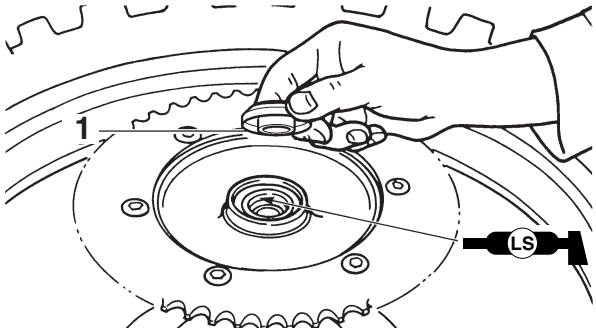

INSTALLING THE REAR WHEEL

1. Install:
   - Rear wheel

TIP

Install the brake disc “1” between the brake pads “2” correctly.

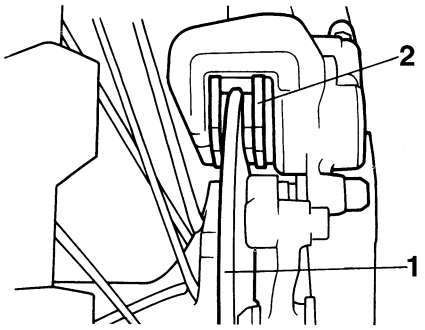

2. Install:
   - Drive chain “1”

TIP

Push the rear wheel “2” forward and install the drive chain.

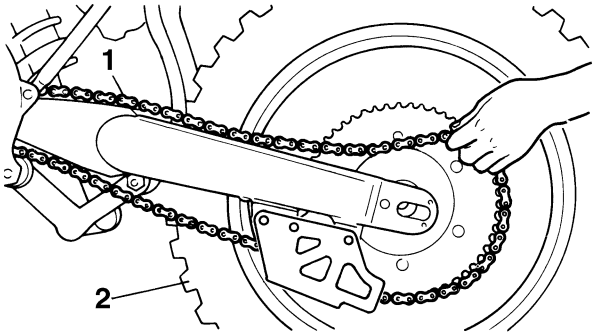

3. Install:
   - Left drive chain puller “1”
   - Rear wheel axle “2”

TIP

- Install the left drive chain puller, and insert the rear wheel axle from the left side.
- Apply the lithium-soap-based grease to the rear wheel axle.

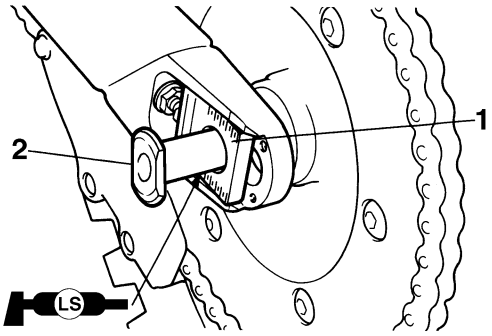

4. Install:
   - Right drive chain puller “1”
   - Washer “2”
   - Rear wheel axle nut “3”

TIP

Temporarily tighten the nut (rear wheel axle) at this point.

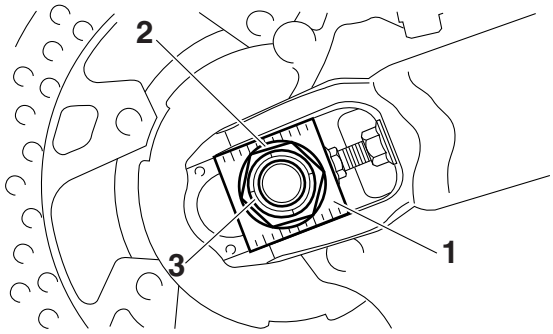

5. Adjust:
   - Drive chain slack “a”

	Drive chain slack **50–60 mm (1.97–2.36 in)**

Refer to “ADJUSTING THE DRIVE CHAIN SLACK” on page 3-30.

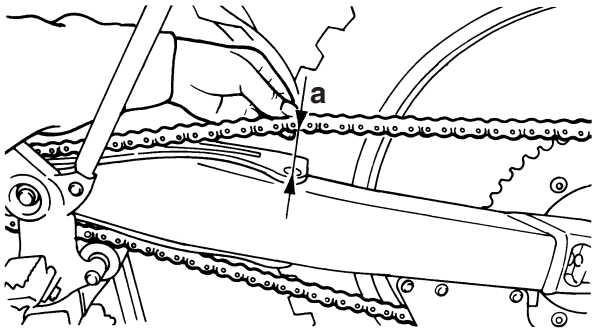

6. Tighten:
   - Rear wheel axle nut “1”

	Wheel axle nut **125 Nm (12.5 m·kgf, 90 ft·lbf)**

- Locknut “2”

	Locknut **21 Nm (2.1 m·kgf, 15 ft·lbf)**

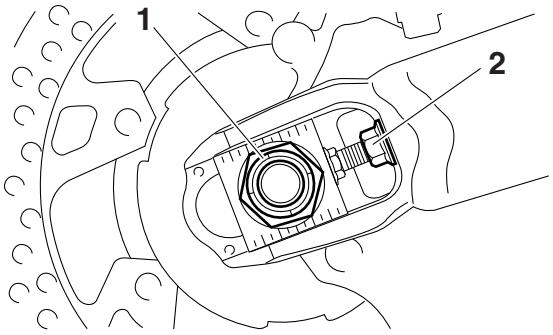

FRONT BRAKE

Removing the front brake caliper

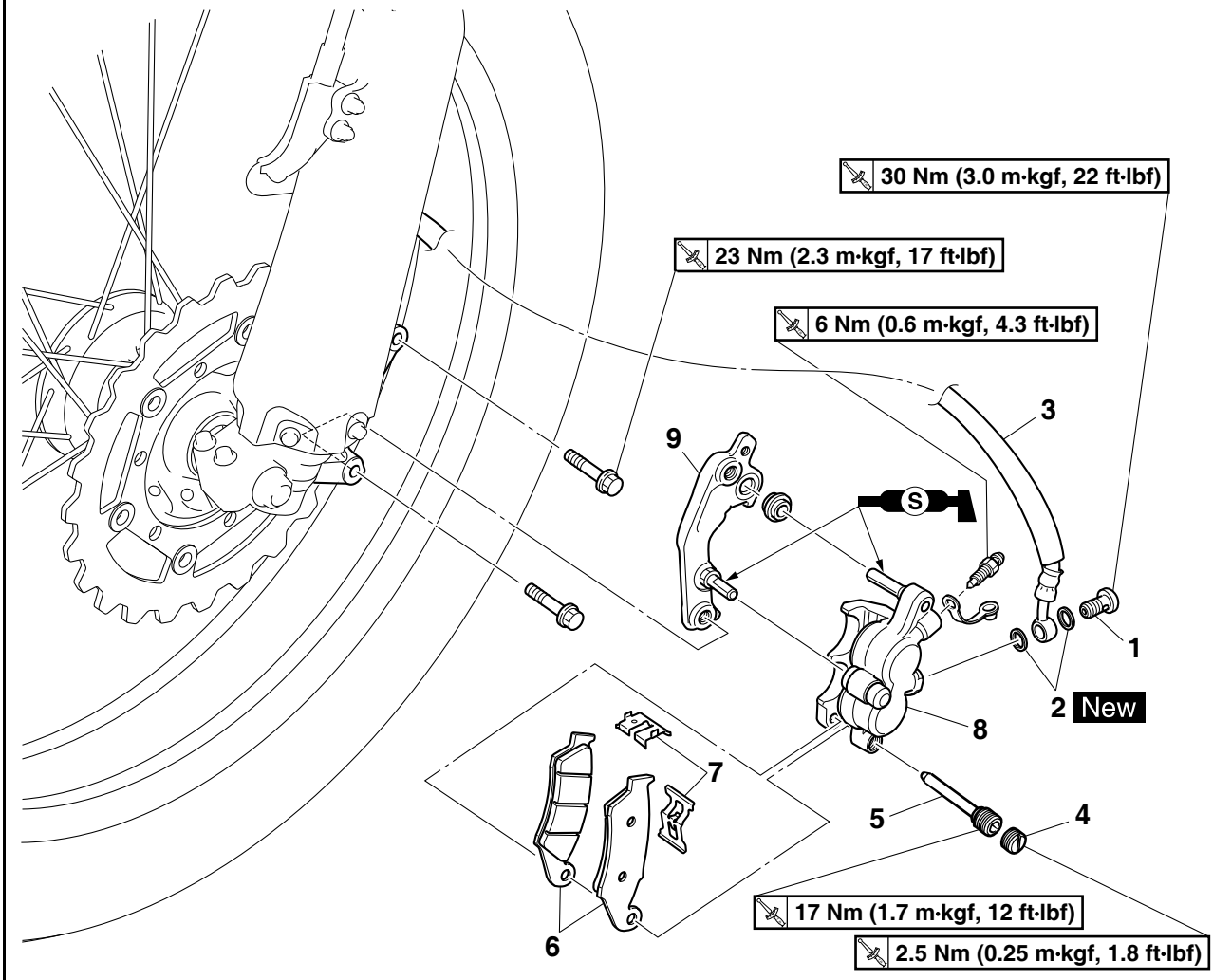

Order	Part name	Q'ty	Remarks
	Brake fluid		Drain. Refer to "BLEEDING THE BRAKE SYSTEM" on page 3-24.
1	Union bolt	1	
2	Copper washers	2	
3	Front brake hose	1	
4	Brake pad pin plug	1	
5	Brake pad pin	1	
6	Brake pads	2	
7	Brake pad spring	2	
8	Front brake caliper assembly	1	
9	Front brake caliper bracket	1	
			For installation, reverse the removal procedure.

Disassembling the front brake caliper

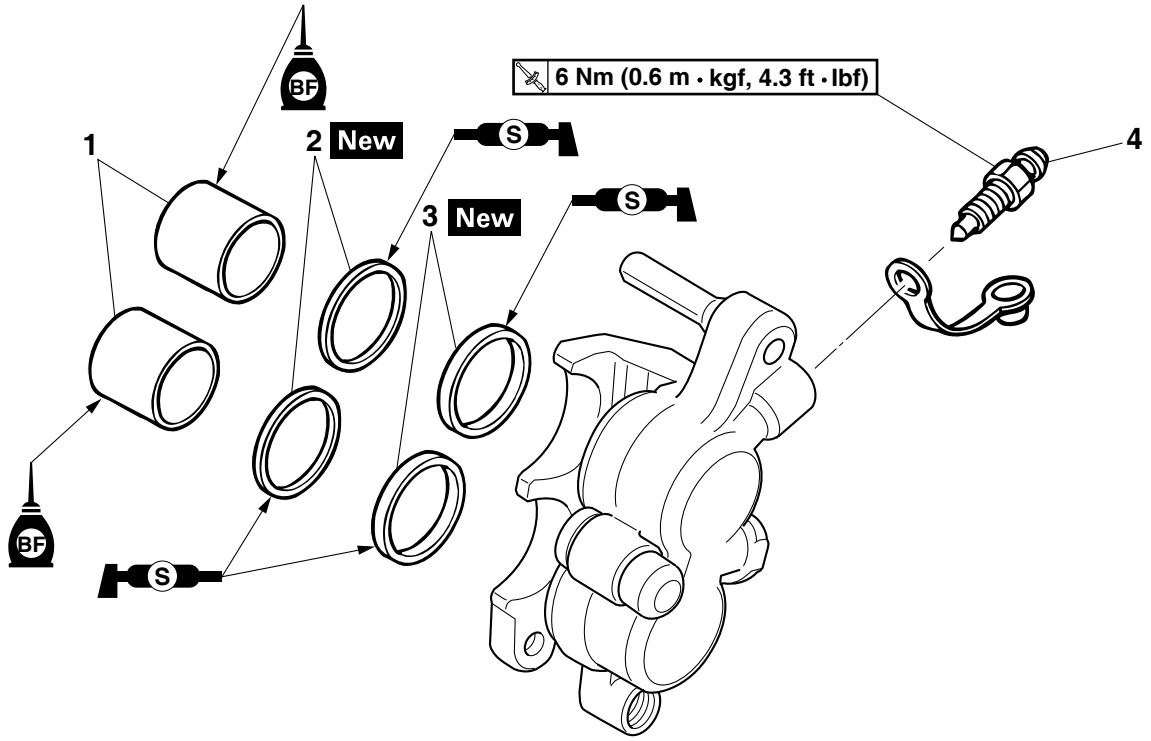

Order	Part name	Q'ty	Remarks
1	Brake caliper piston	2	
2	Brake caliper piston dust seal	2	
3	Brake caliper piston seal	2	
4	Bleed screw	1	
			For assembly, reverse the disassemble procedure.

Removing the front brake master cylinder

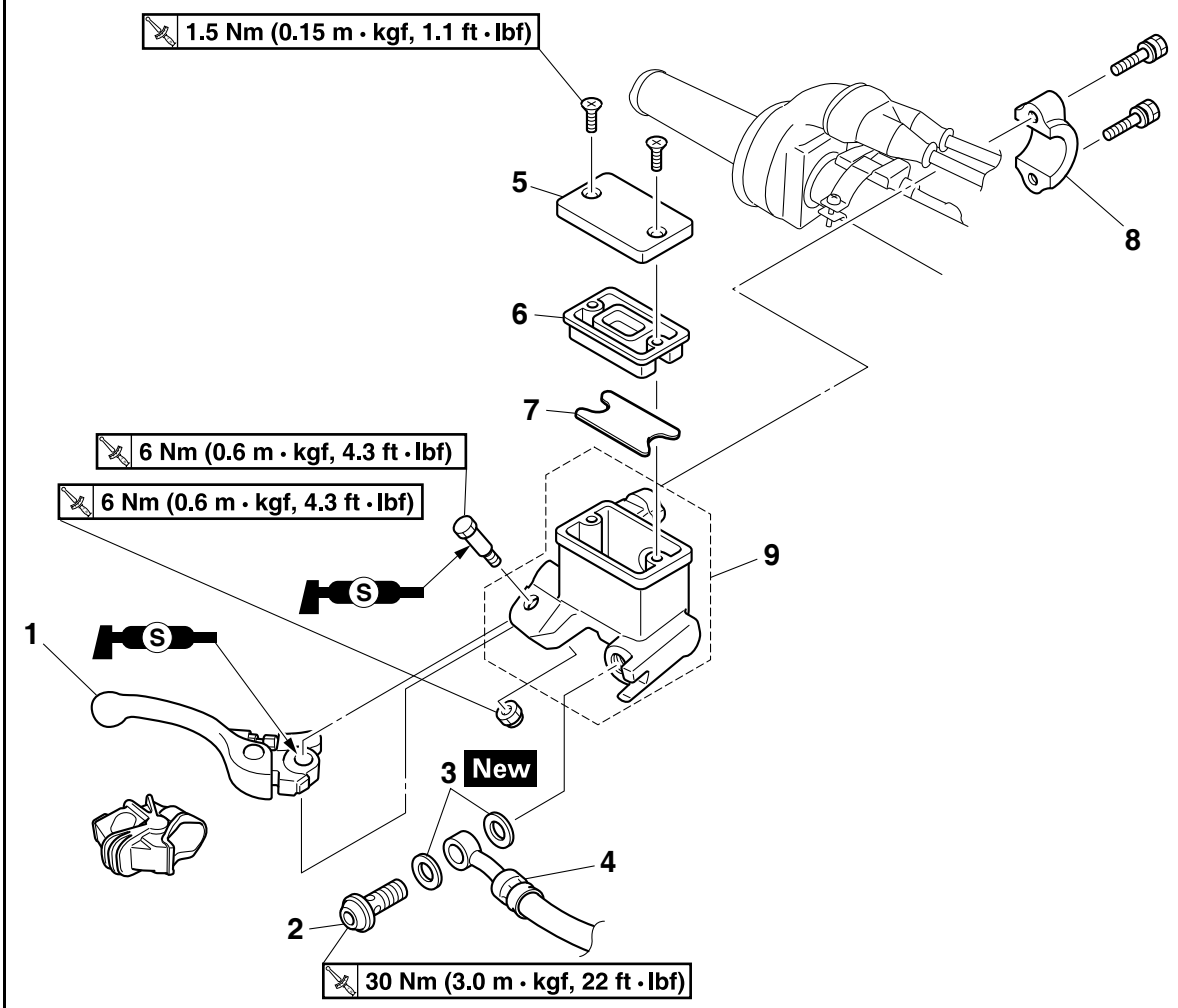

Order	Part name	Q'ty	Remarks
	Brake fluid		Drain. Refer to "BLEEDING THE BRAKE SYSTEM" on page 3-24.
1	Brake lever	1	
2	Union bolt	1	
3	Copper washers	2	
4	Front brake hose	1	
5	Brake master cylinder reservoir cap	1	
6	Brake master cylinder reservoir diaphragm	1	
7	Front brake master cylinder float	1	
8	Front brake master cylinder holder	1	
9	Front brake master cylinder	1	
			For installation, reverse the removal procedure.

Disassembling the front brake master cylinder

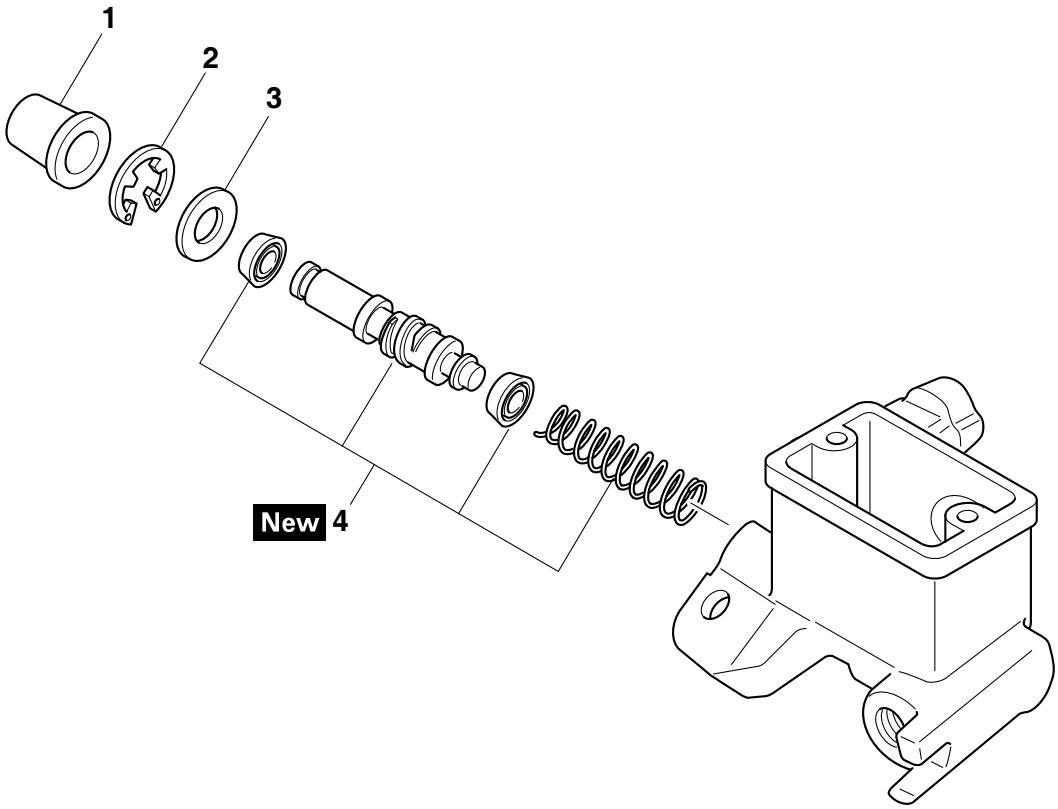

Order	Part name	Q'ty	Remarks
1	Dust boot	1	
2	Circlip	1	
3	Washer	1	
4	Brake master cylinder kit	1	
			For assembly, reverse the disassemble procedure.

INTRODUCTION

WARNING

If you need to disassemble the disc brake components, observe the following precautions.

- **Never disassemble the brake components unless absolutely necessary.**
- **If there is any problem with connections on the hydraulic brake system, perform the following jobs.**
  Disassemble the brake system, drain the brake fluid, and clean it. After that, add a suitable amount of brake fluid. Then, bleed it after reassembly.
- **Use only brake fluid for washing brake components.**
- **Use new brake fluid for cleaning the brake components.**
- **Immediately wipe off the spilled brake fluid to avoid damage to painted surfaces or plastic parts.**
- **Handle brake fluid with special care not to let it enter your eyes so that you may not lost your eyesight.**
- **FIRST AID FOR BRAKE FLUID ENTERING THE EYES:**
- **Flush with water for 15 minutes and get immediate medical attention.**

CHECKING THE FRONT BRAKE DISC

1. Remove:
   - Front wheel
     Refer to “FRONT WHEEL” on page 5-4.
2. Check:
   - Front brake disc
     Damage/galling → Replace.
3. Measure:
   - Brake disc thickness
     Measure the brake disc thickness at a few different locations.
     Out of specification → Replace.

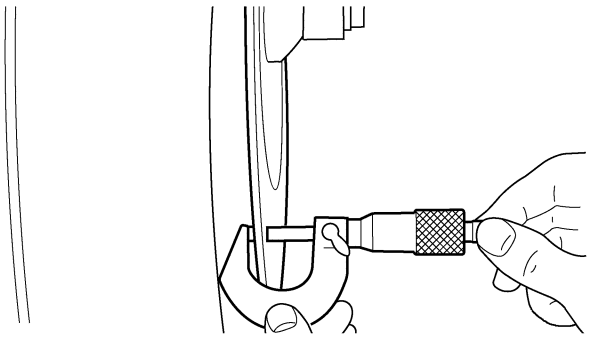

Brake disc thickness limit
2.5 mm (0.10 in)

4. Install:
   - Front wheel
     Refer to “FRONT WHEEL” on page 5-4.

REMOVING THE FRONT BRAKE CALIPER

TIP

Before disassembling the brake caliper, drain the brake fluid from the entire brake system.

1. Remove:
   - Union bolt
   - Copper washers
   - Brake hose

TIP

Put the end of the brake hose into a container and pump out the brake fluid.

DISASSEMBLING THE FRONT BRAKE CALIPER

1. Remove:
   - Brake caliper piston “1”
   - Brake caliper piston dust seal “2”
   - Brake caliper piston seals “3”

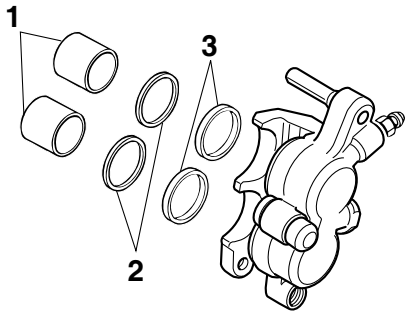

▼▼▼▼▼▼▼▼▼▼▼▼▼▼▼▼▼▼▼▼▼▼▼▼▼▼▼▼▼▼▼▼▼▼

a. Blow compressed air into the brake hose joint opening to force out the piston from the brake caliper.

WARNING

- **Cover the brake caliper piston with a rag. Be careful not to get injured when the piston is expelled from the brake caliper.**
- **Never try to pry out the brake caliper piston.**

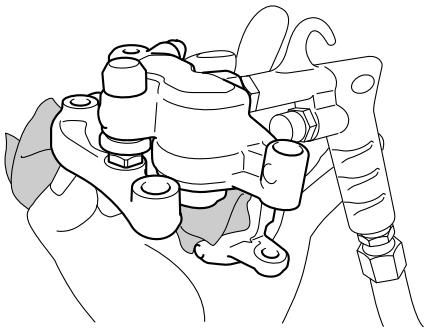

b. Remove the brake caliper piston dust seal and the brake caliper piston seal.

▲▲▲▲▲▲▲▲▲▲▲▲▲▲▲▲▲▲▲▲▲▲▲▲▲▲▲▲▲▲▲▲▲▲

CHECKING THE FRONT BRAKE CALIPER

1. Check:
   - Brake caliper piston "1"
     Rust/scratches/wear → Replace the brake caliper piston.
   - Brake caliper cylinder "2"
     Scratches/wear → Replace the brake caliper assembly.
   - Brake caliper body "3"
     Cracks/damage → Replace the brake caliper assembly.
   - Brake fluid delivery passages (brake caliper body)
     Obstruction → Blow out with compressed air.

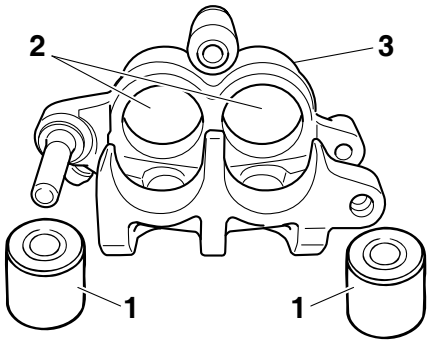

WARNING

When the brake caliper is disassembled, replace the brake caliper piston seal and the brake caliper piston dust seal with new ones.

2. Check:
   - Brake caliper bracket
     Crack/damage → Replace.

ASSEMBLING THE FRONT BRAKE CALIPER

WARNING

- **Before installation, clean and lubricate the internal parts. Use new brake fluid for cleaning and lubricating.**
- **Never use solvents on internal brake components as they will cause the piston seals to swell and distort.**
- **When the brake caliper is disassembled, replace the brake caliper piston seal and the brake caliper piston dust seal with new ones.**

Recommended brake fluid
DOT 4

INSTALLING THE BRAKE CALIPER PISTON

1. Clean:
   - Brake caliper
   - Brake caliper piston seal
   - Brake caliper piston dust seal
   - Brake caliper piston
     Use brake fluid for cleaning.
2. Install:
   - Brake caliper piston seals "1" New
   - Brake caliper piston dust seal "2" New

WARNING

Always use new brake caliper piston seal and brake caliper piston dust seal.

TIP

- Apply the silicone grease on the brake caliper piston seal and brake caliper piston dust seal.
- Fit the brake caliper piston seal and the brake caliper piston dust seal into the grooves in the brake caliper correctly.

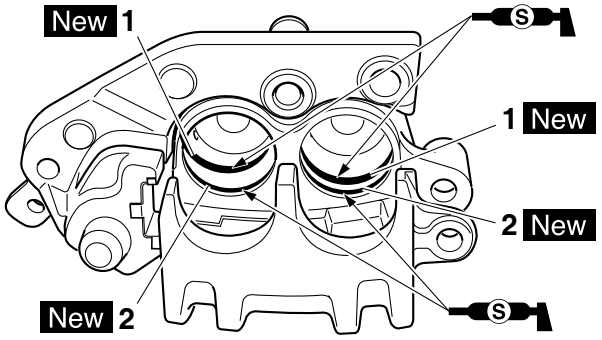

3. Install:
   - Brake caliper piston “1”

TIP

Apply the brake fluid on the piston outer surface.

NOTICE

- **Install the piston with its side “a” facing the brake caliper.**
- **Never force to insert.**

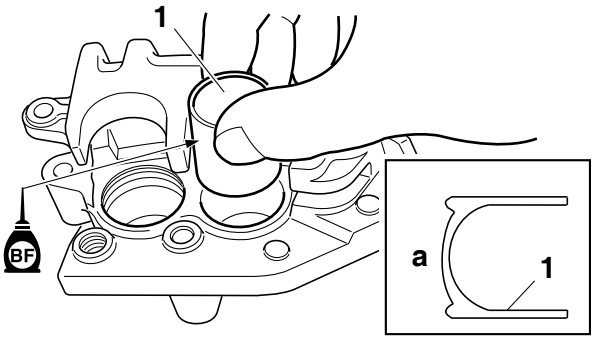

INSTALLING THE FRONT BRAKE CALIPER

1. Install:
   - Front brake caliper bracket
   - Front brake caliper (temporarily)
   - Copper washers New
   - Brake hose
   - Union bolt

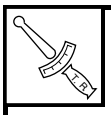	**Front brake caliper bracket** **23 Nm (2.3 m·kgf, 17 ft·lbf)** **Brake hose union bolt** **30 Nm (3.0 m·kgf, 22 ft·lbf)**

WARNING

Proper brake hose routing is essential to insure safe vehicle operation.

NOTICE

Make sure that the pipe portion “a” of the brake hose touches the projection “b” on the brake caliper.

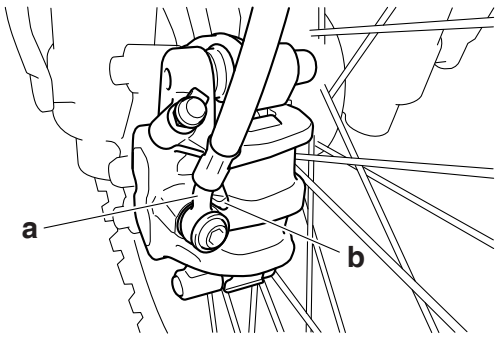

2. Install:
   - Front brake caliper
   - Brake pad spring
   - Brake pad
   - Brake pad pin
   - Brake hose holder

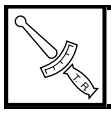	**Brake pad pin** **17 Nm (1.7 m·kgf, 12 ft·lbf)**

Refer to “CHECKING THE FRONT BRAKE PADS” on page 3-26.

3. Tighten:
   - Brake hose holder nut “1”

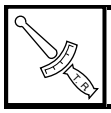	**Brake hose holder nut** **7 Nm (0.7 m·kgf, 5.1 ft·lbf)**

TIP

Make sure that the brake hose holder “2” is installed with its upper end “a” aligned with the paint “b” on the brake hose.

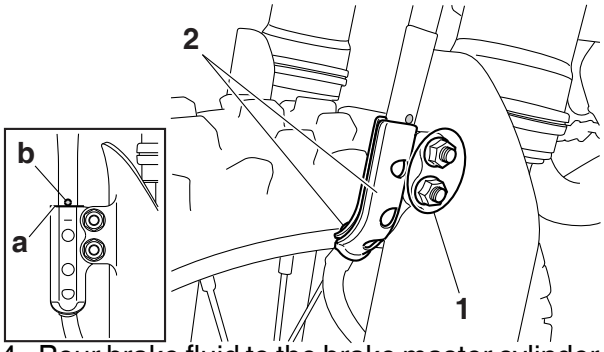

4. Pour brake fluid to the brake master cylinder reservoir up to the specified level.

	**Recommended brake fluid** **DOT 4**

WARNING

- **Use only the designated brake fluid. Other brake fluids may cause the rubber seals to deteriorate, causing leakage and poor brake performance.**
- **Refill with the same type of brake fluid that is already in the system. Mixing brake fluids may result in a harmful chemical reaction, leading to poor brake performance.**
- **When refilling, be careful that water does not enter the brake fluid reservoir. Water will significantly lower the boiling point of the brake fluid and could cause vapor lock.**

NOTICE

Brake fluid may damage painted surfaces and plastic parts. Therefore, always clean up any spilt brake fluid immediately.

5. Bleed:
   - Brake system
     Refer to “BLEEDING THE BRAKE SYSTEM” on page 3-24.
6. Check:
   - Brake fluid level
     The minimum level mark or below → Add.
     Refer to “CHECKING THE BRAKE FLUID LEVEL” on page 3-29.
7. Check:
   - Brake lever free play
     Refer to “ADJUSTING THE FRONT BRAKE” on page 3-25.
   - Brake lever operation
     A softy or spongy feeling → Bleed the brake system.
     Refer to “BLEEDING THE BRAKE SYSTEM” on page 3-24.

REMOVING THE FRONT BRAKE MASTER CYLINDER

TIP

Before removing the front brake master cylinder, drain the brake fluid from the entire brake system.

1. Remove:
   - Union bolt
   - Copper washers
   - Brake hoses

TIP

To drain any remaining brake fluid, place a container under the master cylinder and the end of the brake hose.

CHECKING THE FRONT BRAKE MASTER CYLINDER

1. Check:
   - Brake master cylinder “1”
     Damage/scratches/wear → Replace.
   - Brake fluid delivery passages “2”
     (brake master cylinder body)
     Obstruction → Blow out with compressed air.

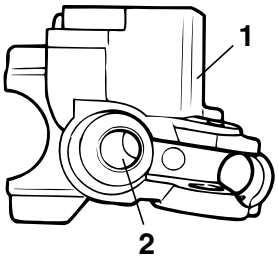

2. Check:
   - Brake master cylinder kit
     Damage/scratches/wear → Replace.
3. Check:
   - Brake master cylinder reservoir cap
4. Check:
   - Brake hoses
     Cracks/damage/wear → Replace.

ASSEMBLING THE FRONT BRAKE MASTER CYLINDER

WARNING

- **Before installation, all internal brake components should be cleaned and lubricated with clean or new brake fluid.**
- **Never use solvents on internal brake components.**

	Recommended brake fluid **DOT 4**

1. Wash the brake master cylinder and the brake master cylinder kit with brake fluid.
2. Install:
   - Primary cylinder cup “1”
   - Secondary cylinder cup “2”
     Install to the brake master cylinder piston “3”.

WARNING

Apply brake fluid to the cylinder cups and install them as shown. Wrong orientation in installation causes poor braking performance.

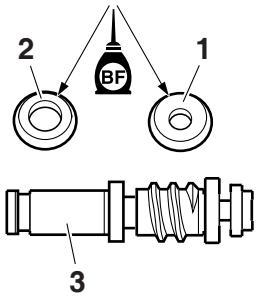

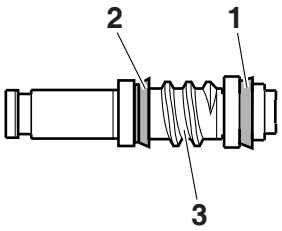

3. Install:
   - Spring “1”
     Install to the brake master cylinder piston “2”.

TIP

Install the spring with a smaller inside diameter to the brake master cylinder piston.

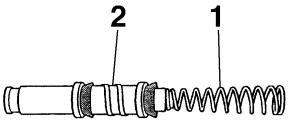

4. Install:
   - Brake master cylinder kit “1” New
   - Washer “2”
   - Circlip “3” New
   - Dust boot “4”

TIP

- Before installation, apply brake fluid to the brake master cylinder kit.
- Use circlip pliers to install the circlip.

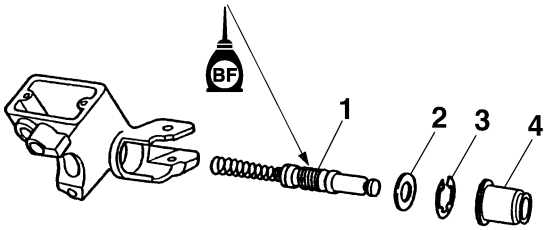

INSTALLING THE FRONT BRAKE MASTER CYLINDER

1. Install:
   - Brake master cylinder “1”

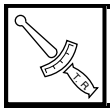	**Brake master cylinder holder bolt 9 Nm (0.9 m·kgf, 6.5 ft·lbf)**

TIP

- Install the front brake master cylinder holder with the “UP” mark facing up.
- First, tighten the upper bolt, then the lower bolt.

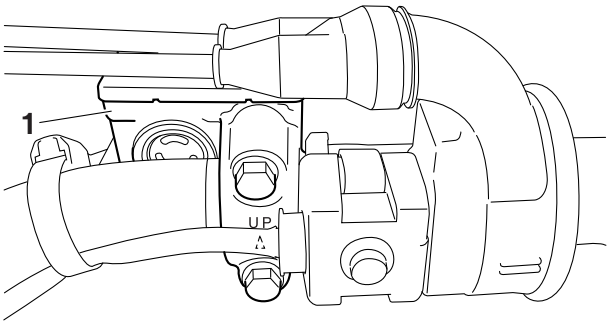

2. Install:
   - Copper washers New
   - Brake hose
   - Union bolt

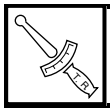	**Brake hose union bolt 30 Nm (3.0 m·kgf, 22 ft·lbf)**

WARNING

Proper brake hose routing is essential to insure safe vehicle operation.

NOTICE

During installation, bring the brake hose into contact with the brake master cylinder projection “a” and make its bent portion “b” face downward.

TIP

Turn the handlebar toward right and left to make sure that the brake hose does not touch other parts (e.g., wire harness, cables, leads). Adjust if necessary.

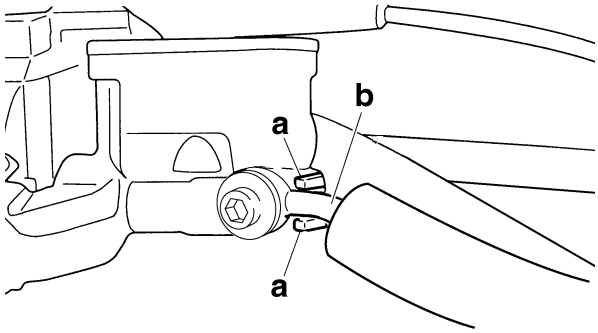

3. Pour brake fluid to the brake master cylinder reservoir up to the specified level.

	Recommended brake fluid DOT 4

WARNING

- **Use only the designated brake fluid. Other brake fluids may cause the rubber seals to deteriorate, causing leakage and poor brake performance.**
- **Refill with the same type of brake fluid that is already in the system. Mixing brake fluids may result in a harmful chemical reaction, leading to poor brake performance.**
- **When refilling, be careful that water does not enter the brake master cylinder reservoir. Water will significantly lower the boiling point of the brake fluid and could cause vapor lock.**

NOTICE

Brake fluid may damage painted surfaces and plastic parts. Therefore, always clean up any spilt brake fluid immediately.

4. Bleed:
   - Brake system
     Refer to “BLEEDING THE BRAKE SYSTEM” on page 3-24.
5. Check:
   - Brake fluid level
     The minimum level mark “a” or below → Add.
     Refer to “CHECKING THE BRAKE FLUID LEVEL” on page 3-29.

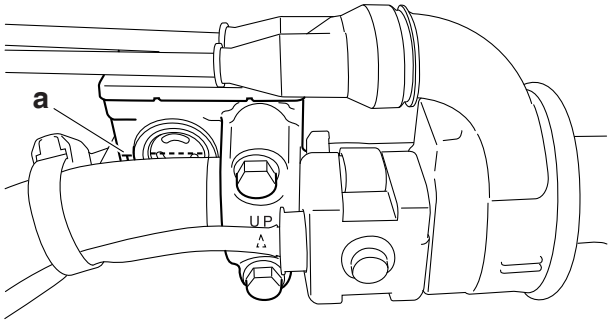

6. Check:
   - Brake lever free play
     Refer to “ADJUSTING THE FRONT BRAKE” on page 3-25.
   - Brake lever operation
     A softy or spongy feeling → Bleed the brake system.
     Refer to “BLEEDING THE BRAKE SYSTEM” on page 3-24.

REAR BRAKE

Removing the rear brake caliper

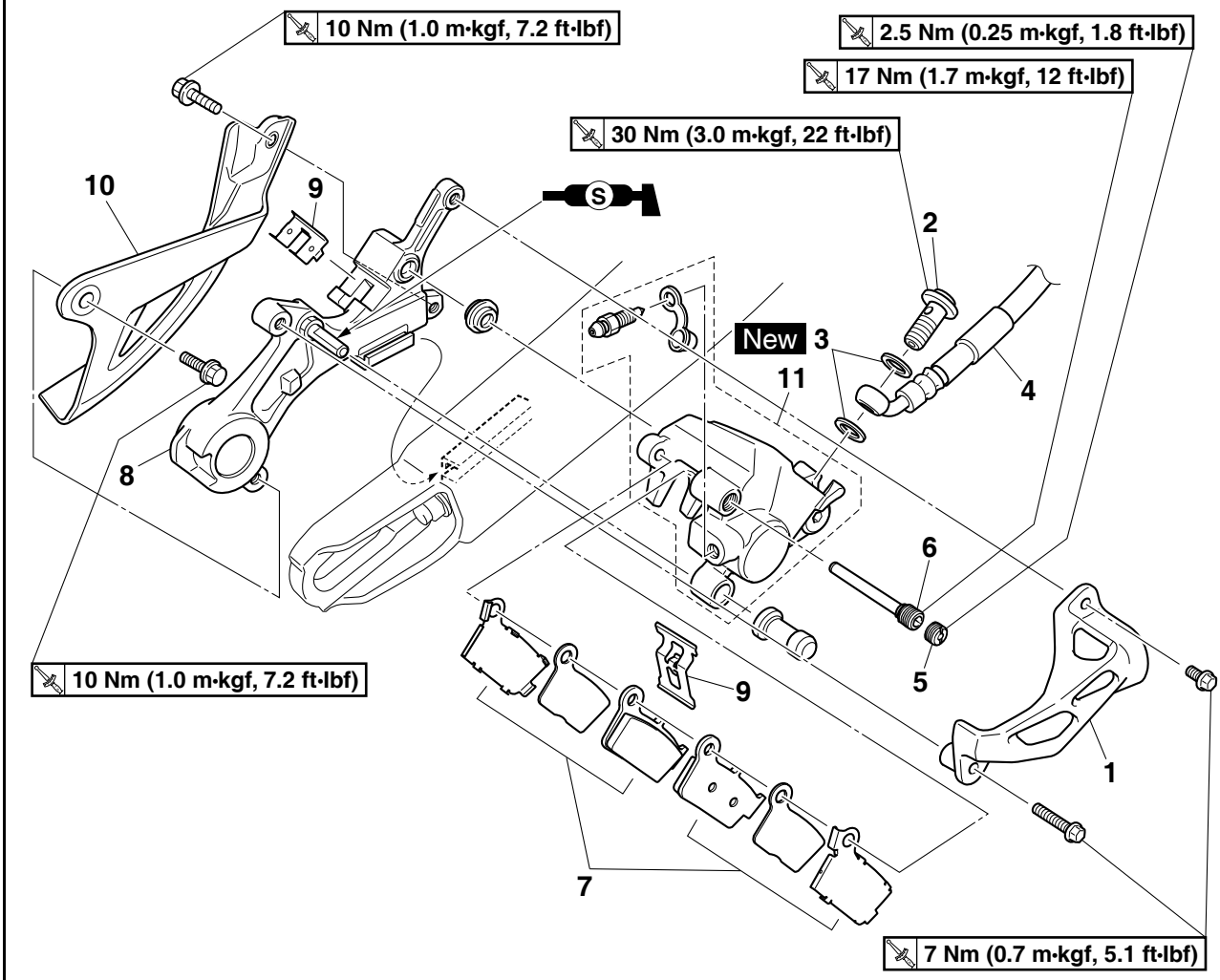

Order	Part name	Q'ty	Remarks
	Brake fluid		Drain. Refer to "BLEEDING THE BRAKE SYSTEM" on page 3-24.
1	Protector	1	
2	Union bolt	1	
3	Copper washers	2	
4	Rear brake hose	1	
5	Brake pad pin plug	1	
6	Brake pad pin	1	
7	Rear brake pad assembly	2	
8	Rear brake caliper bracket	1	
9	Brake pad springs	2	
10	Rear brake disc cover	1	
11	Rear brake caliper assembly	1	
			For installation, reverse the removal procedure.

Disassembling the rear brake caliper

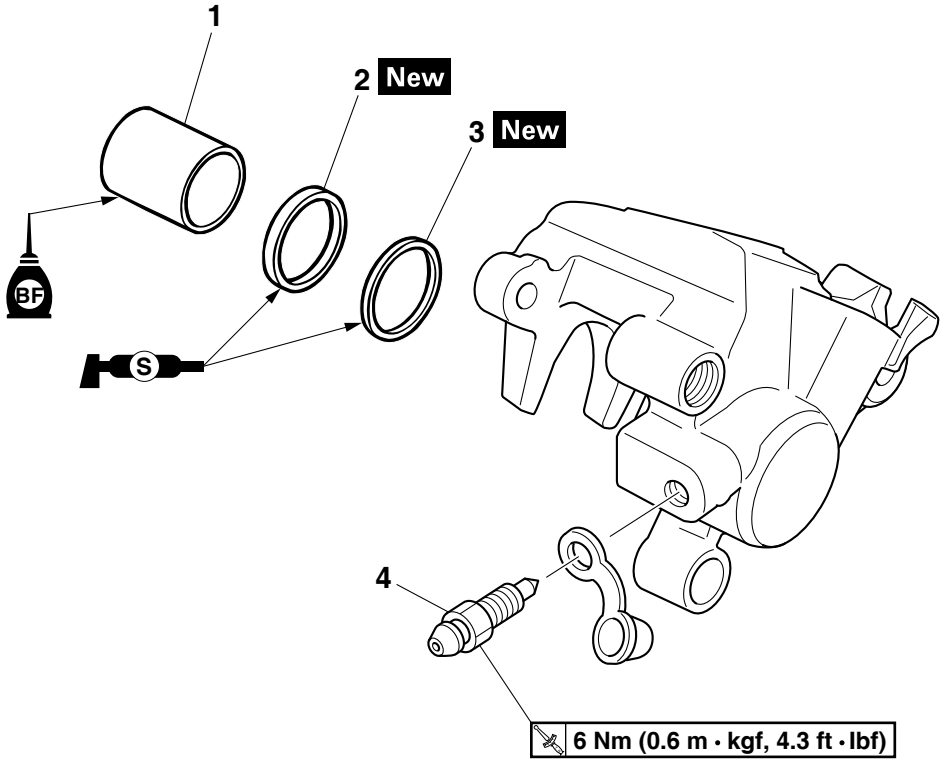

Order	Part name	Q'ty	Remarks
1	Brake caliper piston	1	
2	Brake caliper piston dust seal	1	
3	Brake caliper piston seal	1	
4	Bleed screw	1	
			For assembly, reverse the disassemble procedure.

Removing the rear brake master cylinder

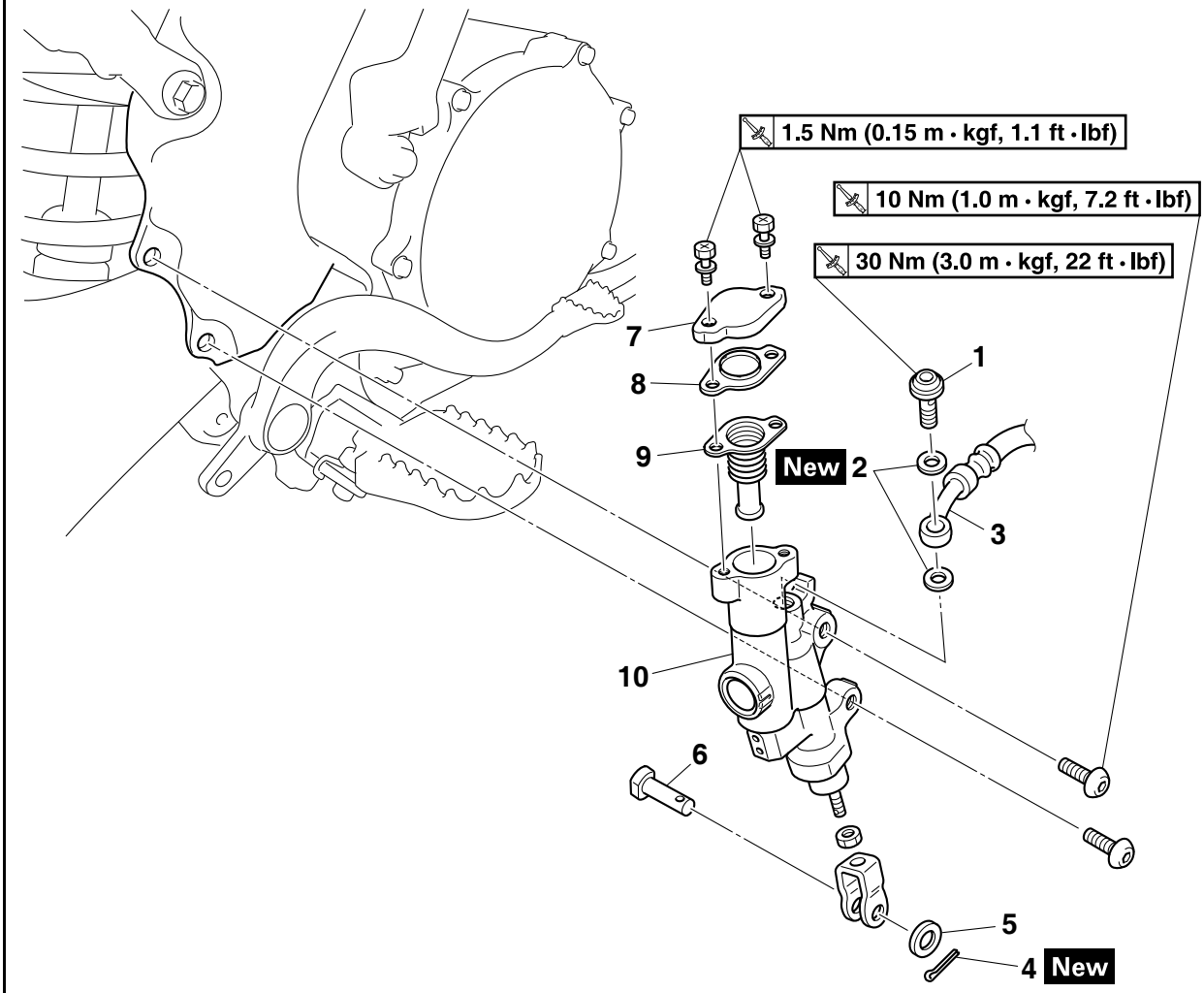

Order	Part name	Q'ty	Remarks
	Brake fluid		Drain. Refer to "BLEEDING THE BRAKE SYSTEM" on page 3-24.
1	Union bolt	1	
2	Copper washers	2	
3	Brake hose	1	
4	Split pin	1	
5	Washer	1	
6	Pin	1	
7	Brake master cylinder reservoir cap	1	
8	Brake master cylinder reservoir diaphragm plate	1	
9	Brake master cylinder reservoir diaphragm	1	
10	Rear brake master cylinder	1	
			For installation, reverse the removal procedure.

Disassembling the rear brake master cylinder

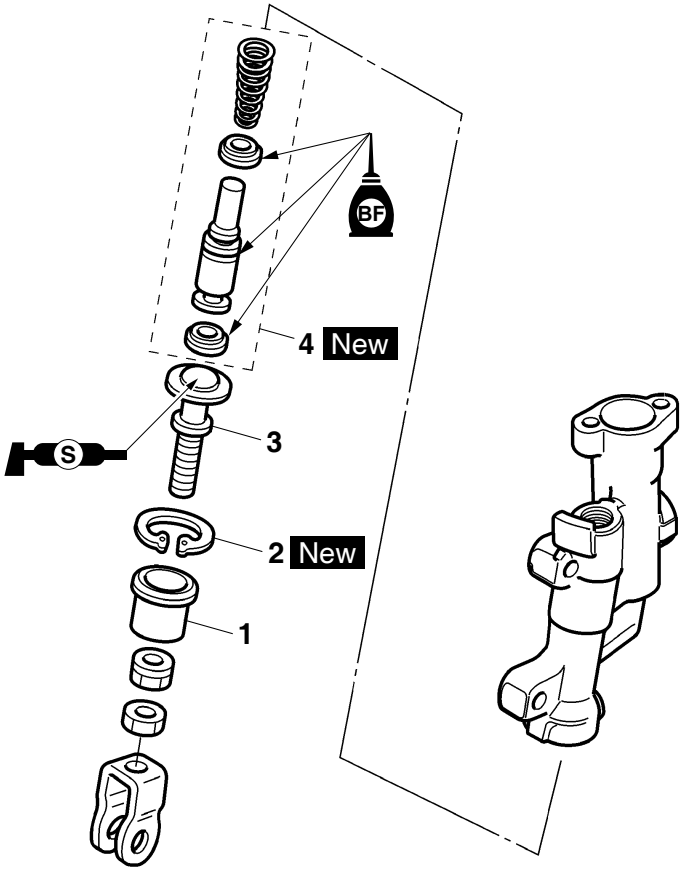

Order	Part name	Q'ty	Remarks
1	Dust boot	1	
2	Circlip	1	
3	Push rod	1	
4	Brake master cylinder kit	1	
			For assembly, reverse the disassemble procedure.

INTRODUCTION

WARNING

If you need to disassemble the disc brake components, observe the following precautions.

- **Never disassemble the brake components unless absolutely necessary.**
- **If there is any problem with connections on the hydraulic brake system, perform the following jobs.**
  Disassemble the brake system, drain the brake fluid, and clean it. After that, add a suitable amount of brake fluid. Then, bleed it after reassembly.
- **Use only brake fluid for washing internal brake components.**
- **Use new brake fluid for cleaning the brake components.**
- **Immediately wipe off the spilled brake fluid to avoid damage to painted surfaces or plastic parts.**
- **Handle brake fluid with special care not to let it enter your eyes so that you may not lost your eyesight.**
- **FIRST AID FOR BRAKE FLUID ENTERING THE EYES:**
- **Flush with water for 15 minutes and get immediate medical attention.**

CHECKING THE REAR BRAKE DISC

1. Remove:
   - Rear wheel
     Refer to “REAR WHEEL” on page 5-9.
2. Check:
   - Brake disc
     Damage/galling → Replace.
3. Measure:
   - Brake disc thickness
     Measure the brake disc thickness at a few different locations.
     Out of specification → Replace.
     Refer to “CHECKING THE FRONT BRAKE DISC” on page 5-17.

Brake disc thickness limit
3.5 mm (0.14 in)

4. Measure:
   - Brake disc deflection
     Out of specification → Correct the brake disc deflection or replace the brake disc.

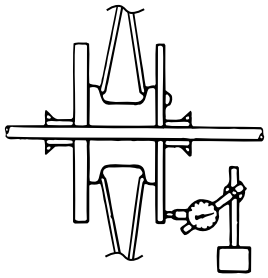

Brake disc deflection limit
0.15 mm (0.0059 in)

5. Adjust:
   - Brake disc deflection

▼▼▼▼▼▼▼▼▼▼▼▼▼▼▼▼▼▼▼▼▼▼▼▼▼▼▼▼▼▼▼▼▼▼

a. Remove the brake disc.
b. Turn the mounted position of the brake disc by one bolt hole.
c. Install the brake disc.

TIP

Tighten the brake disc bolts in stages and in a crisscross pattern.

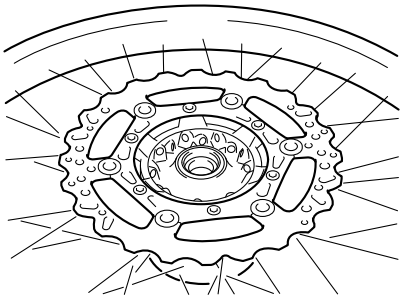

Brake disc bolt
14 Nm (1.4 m·kgf, 10 ft·lbf)
LOCTITE®

d. Measure the brake disc deflection.
e. If out of specification, repeat the adjustment steps until the brake disc deflection is within specification.
f. If the brake disc deflection cannot be brought within specification, replace the brake disc.

▲▲▲▲▲▲▲▲▲▲▲▲▲▲▲▲▲▲▲▲▲▲▲▲▲▲▲▲▲▲▲▲▲▲

6. Install:
   - Rear wheel
     Refer to “REAR WHEEL” on page 5-9.

REMOVING THE REAR BRAKE CALIPER

TIP

Before disassembling the brake caliper, drain the brake fluid from the entire brake system.

1. Remove:
   - Union bolt
   - Copper washers
   - Brake hose

TIP

Put the end of the brake hose into a container and pump out the brake fluid.

DISASSEMBLING THE REAR BRAKE CALIPER

1. Remove:
   - Brake caliper piston “1”
   - Brake caliper piston dust seal “2”
   - Brake caliper piston seal “3”

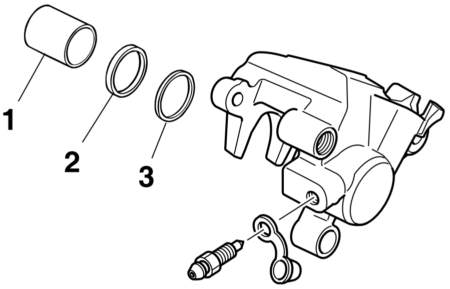

▼▼▼▼▼▼▼▼▼▼▼▼▼▼▼▼▼▼▼▼▼▼▼▼▼▼▼▼▼▼▼▼▼▼▼

a. Blow compressed air into the brake hose joint opening to force out the piston from the brake caliper.

⚠ WARNING

- **Cover the brake caliper piston with a rag. Be careful not to get injured when the piston is expelled from the brake caliper.**
- **Never try to pry out the brake caliper piston.**

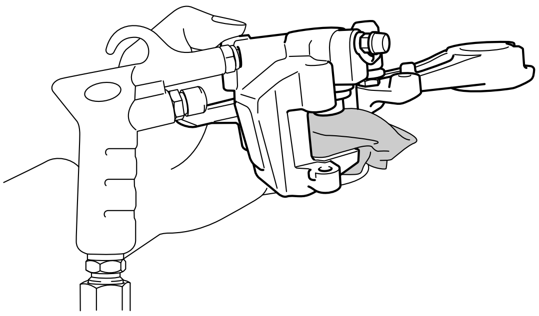

b. Remove the brake caliper piston dust seal and the brake caliper piston seal.

▲▲▲▲▲▲▲▲▲▲▲▲▲▲▲▲▲▲▲▲▲▲▲▲▲▲▲▲▲▲▲▲▲

CHECKING THE REAR BRAKE CALIPER

1. Check:
   - Brake caliper piston “1”
     Rust/scratches/wear → Replace the brake caliper piston.
   - Brake caliper cylinder “2”
     Scratches/wear → Replace the brake caliper assembly.
   - Brake caliper body “3”
     Cracks/damage → Replace the brake caliper assembly.
   - Brake fluid delivery passages
     (brake caliper body)
     Obstruction → Blow out with compressed air.

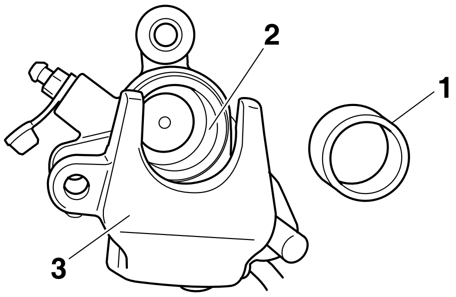

⚠ WARNING

When the brake caliper is disassembled, replace the brake caliper piston seal and the brake caliper piston dust seal with new ones.

2. Check:
   - Brake caliper bracket
     Crack/damage → Replace.

ASSEMBLING THE REAR BRAKE CALIPER

⚠ WARNING

- **Before installation, clean and lubricate the internal parts. Use new brake fluid for cleaning and lubricating.**
- **Never use solvents on internal brake components as they will cause the piston seals to swell and distort.**
- **When the brake caliper is disassembled, replace the brake caliper piston seal and the brake caliper piston dust seal with new ones.**

Recommended brake fluid
DOT 4

INSTALLING THE BRAKE CALIPER PISTON

1. Clean:
   - Brake caliper
   - Brake caliper piston seal
   - Brake caliper piston dust seal
   - Brake caliper piston
     Use brake fluid for cleaning.
2. Install:
   - Brake caliper piston seals “1” New
   - Brake caliper piston dust seal “2” New

WARNING

Always use new brake caliper piston seal and brake caliper piston dust seal.

TIP

- Apply the silicone grease on the brake caliper piston seal and brake caliper piston dust seal.
- Fit the brake caliper piston seals and brake caliper piston dust seals onto the slot on brake caliper correctly.

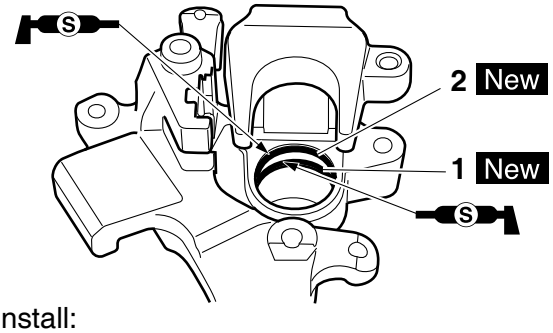

3. Install:
   - Brake caliper piston “1”

TIP

Apply the brake fluid on the piston outer surface.

NOTICE

- **Install the piston with its side “a” facing the brake caliper.**
- **Never force to insert.**

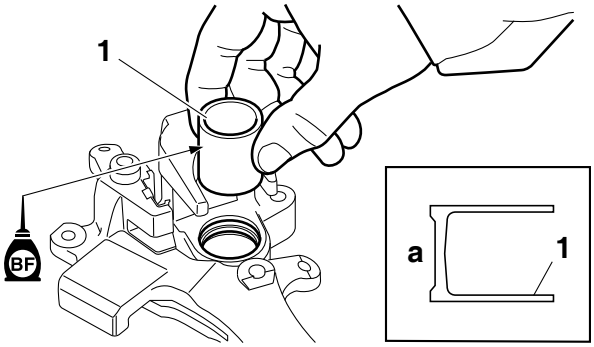

INSTALLING THE REAR BRAKE CALIPER

1. Install:
   - Rear brake caliper
   - Rear brake caliper bracket
2. Install:
   - Rear wheel
     Refer to “REAR WHEEL” on page 5-9.
   - Copper washers New
   - Brake hose
   - Union bolt

Brake hose union bolt
30 Nm (3.0 m·kgf, 22 ft·lbf)

WARNING

Proper brake hose routing is essential to insure safe vehicle operation.

NOTICE

Make sure that a bend in its pipe portion “a” is directed as shown and the brake hose touches the projection “b” on the brake caliper.

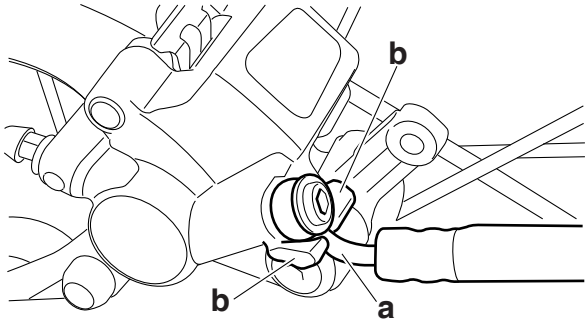

3. Install:
   - Brake pad springs
   - Brake pads
   - Brake pad pin
   - Brake pad pin plug

Brake pad pin
17 Nm (1.7 m·kgf, 12 ft·lbf)
Brake pad pin plug
2.5 Nm (0.25 m·kgf, 1.8 ft·lbf)

Refer to “CHECKING THE REAR BRAKE PADS” on page 3-28.

4. Pour brake fluid to the brake fluid reservoir up to the specified level.

Recommended brake fluid
DOT 4

WARNING

- **Use only the designated brake fluid. Other brake fluids may cause the rubber seals to deteriorate, causing leakage and poor brake performance.**
- **Refill with the same type of brake fluid that is already in the system. Mixing brake fluids may result in a harmful chemical reaction, leading to poor brake performance.**
- **When refilling, be careful that water does not enter the brake fluid reservoir. Water will significantly lower the boiling point of the brake fluid and could cause vapor lock.**

NOTICE

Brake fluid may damage painted surfaces and plastic parts. Therefore, always clean up any spilt brake fluid immediately.

5. Bleed:
   - Brake system
     Refer to "BLEEDING THE BRAKE SYSTEM" on page 3-24.
6. Check:
   - Brake fluid level
     The minimum level mark "a" or below → Add.
     Refer to "CHECKING THE BRAKE FLUID LEVEL" on page 3-29.

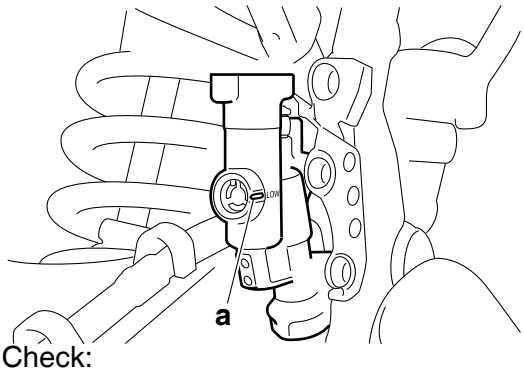

7. Check:
   - Brake pedal operation
     A softy or spongy feeling → Bleed the brake system.
     Refer to "BLEEDING THE BRAKE SYSTEM" on page 3-24.

REMOVING THE REAR BRAKE MASTER CYLINDER

TIP

Before removing the rear brake master cylinder, drain the brake fluid from the entire brake system.

1. Remove:
   - Union bolt
   - Copper washers
   - Brake hose

TIP

To drain any remaining brake fluid, place a container under the master cylinder and the end of the brake hose.

CHECKING THE REAR BRAKE MASTER CYLINDER

1. Check:
   - Brake master cylinder "1"
     Damage/scratches/wear → Replace.
   - Brake fluid delivery passages "2"
     (brake master cylinder body)
     Obstruction → Blow out with compressed air.

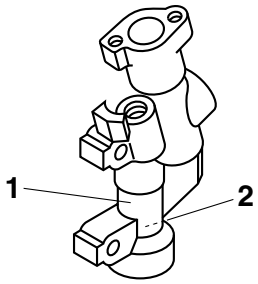

2. Check:
   - Brake master cylinder kit
     Damage/wear → Replace.
3. Check:
   - Master cylinder reservoir cap
     Crack/damage → Replace.
   - Brake master cylinder reservoir diaphragm holder
   - Brake master cylinder reservoir diaphragm
     Crack/damage → Replace.
4. Check:
   - Brake hoses
     Cracks/damage/wear → Replace.

ASSEMBLING THE REAR BRAKE MASTER CYLINDER

WARNING

- **Before installation, all internal brake components should be cleaned and lubricated with clean or new brake fluid.**
- **Never use solvents on internal brake components.**

	Recommended brake fluid **DOT 4**

1. Wash the brake master cylinder and the brake master cylinder kit with brake fluid.
2. Install:
   - Primary cylinder cup “1”
   - Secondary cylinder cup “2”
     Install to the brake master cylinder piston “3”.

WARNING

Apply brake fluid to the cylinder cups and install them as shown. Wrong orientation in installation causes poor braking performance.

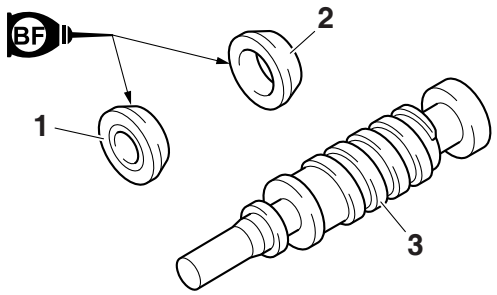

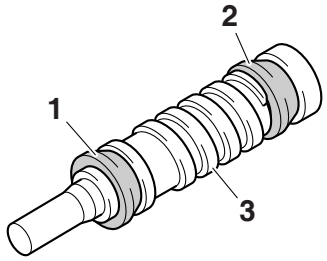

3. Install:
   - Spring “1”
     Install to the brake master cylinder piston “2”.

TIP

Install the spring with a smaller inside diameter to the brake master cylinder piston.

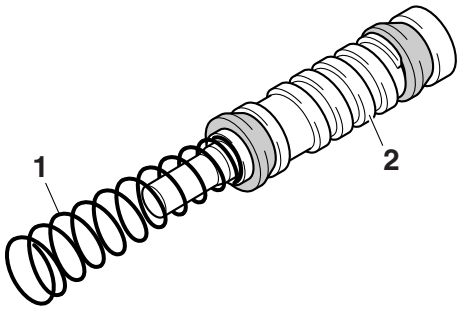

4. Install:
   - Master cylinder kit “1” New
   - Push rod “2”
   - Circlip “3” New
   - Dust boot “4”

TIP

- Before installation, apply brake fluid to the brake master cylinder kit.
- Before installation, apply silicone grease to the push rod end.
- Use circlip pliers to install the circlip.

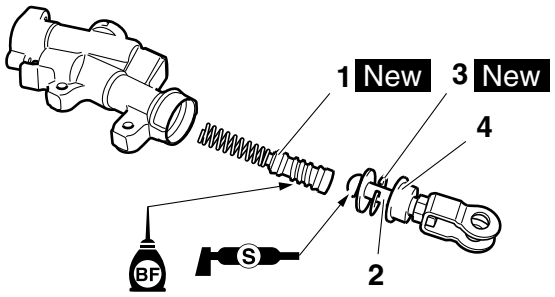

INSTALLING THE REAR BRAKE MASTER CYLINDER

1. Install:
   - Copper washers New
   - Brake hose
   - Union bolt

	Brake hose union bolt **30 Nm (3.0 m·kgf, 22 ft·lbf)**

WARNING

Proper brake hose routing is essential to insure safe vehicle operation.

NOTICE

Make sure that the pipe portion of the brake hose touches the projection “a” on the brake caliper.

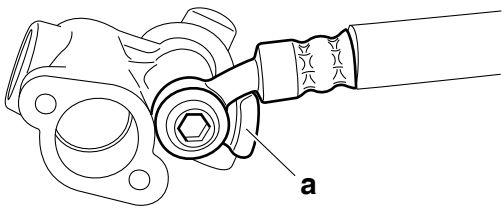

2. Pour brake fluid to the brake fluid reservoir up to the specified level.

	Recommended brake fluid **DOT 4**

WARNING

- **Use only the designated brake fluid. Other brake fluids may cause the rubber seals to deteriorate, causing leakage and poor brake performance.**
- **Refill with the same type of brake fluid that is already in the system. Mixing brake fluids may result in a harmful chemical reaction, leading to poor brake performance.**
- **When refilling, be careful that water does not enter the brake fluid reservoir. Water will significantly lower the boiling point of the brake fluid and could cause vapor lock.**

NOTICE

Brake fluid may damage painted surfaces and plastic parts. Therefore, always clean up any spilt brake fluid immediately.

3. Bleed:
   - Brake system
     Refer to “BLEEDING THE BRAKE SYSTEM” on page 3-24.
4. Check:
   - Brake fluid level
     The minimum level mark “a” or below → Add.
     Refer to “CHECKING THE BRAKE FLUID LEVEL” on page 3-29.

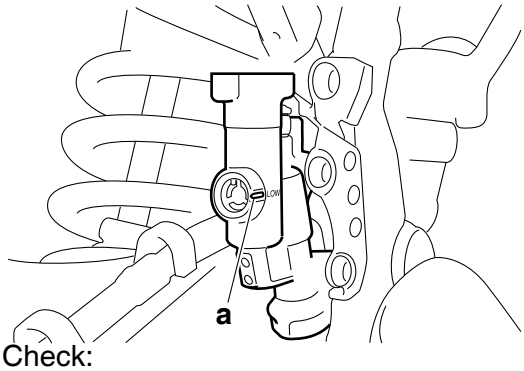

5. Check:
   - Brake pedal operation
     A softy or spongy feeling → Bleed the brake system.
     Refer to “BLEEDING THE BRAKE SYSTEM” on page 3-24.

HANDLEBAR

Removing the handlebar

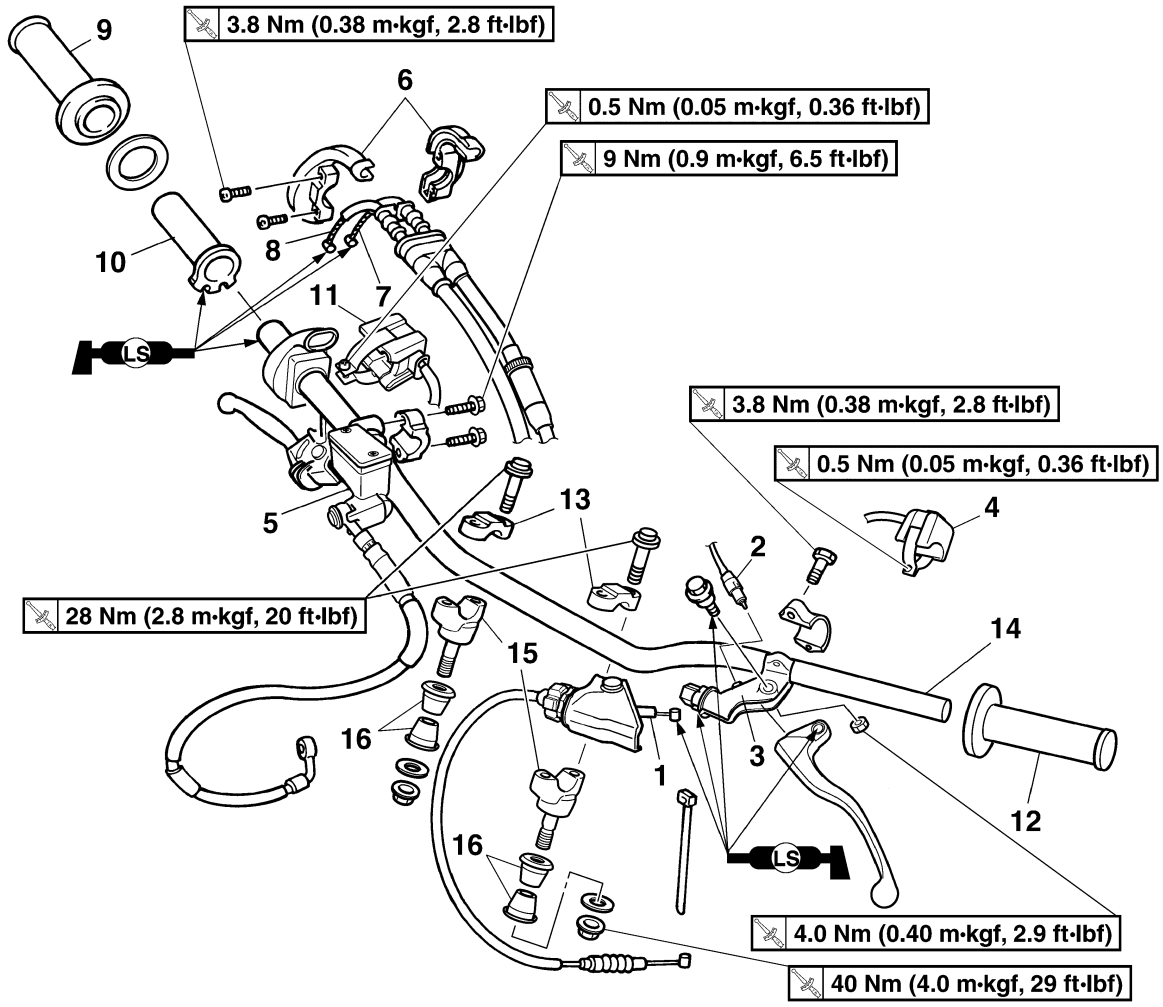

Order	Part name	Q'ty	Remarks
1	Clutch cable	1	Disconnect.
2	Clutch switch	1	
3	Clutch lever holder	1	
4	Engine stop switch	1	
5	Brake master cylinder	1	
6	Throttle cable cap	1	
7	Throttle cable (pull)	1	Disconnect.
8	Throttle cable (return)	1	Disconnect.
9	Right grip	1	
10	Tube guide	1	
11	Start switch	1	
12	Left grip	1	
13	Handlebar upper holder	2	
14	Handlebar	1	

Removing the handlebar

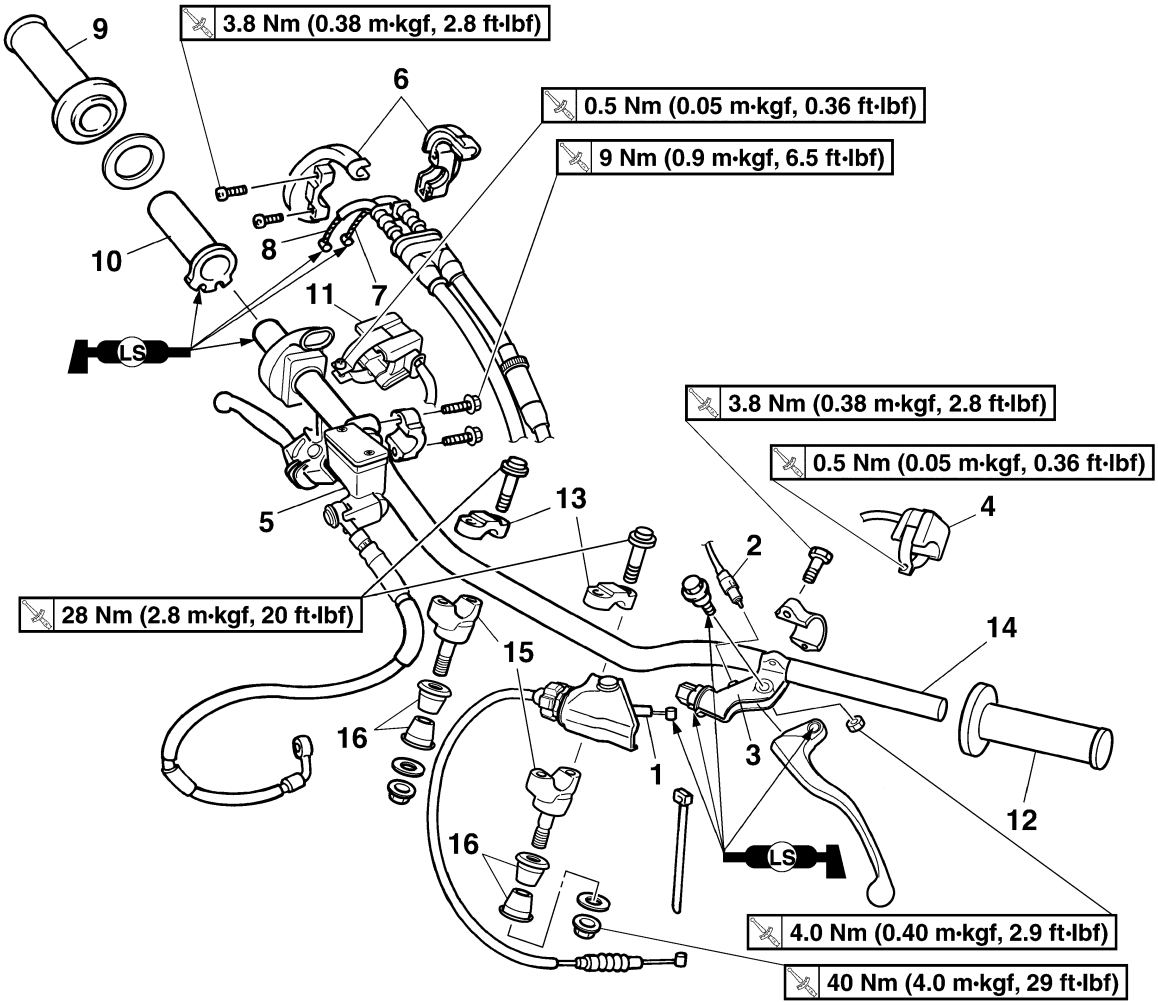

Order	Part name	Q'ty	Remarks
15	Handlebar lower holder	2	
16	Damper	4	
			For installation, reverse the removal procedure.

REMOVING THE HANDLEBAR

1. Stand the vehicle on a level surface.

WARNING

Securely support the vehicle so that there is no danger of it falling over.

2. Remove:
   - Clutch switch “1”

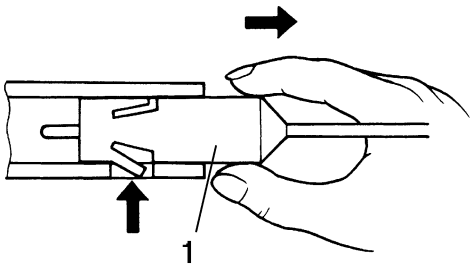

TIP

Press the projection, and remove it from the clutch lever assembly.

3. Remove:
   - Handlebar grip “1”

TIP

Blow compressed air between the left handlebar and the handlebar grip, and gradually push the grip off the handlebar.

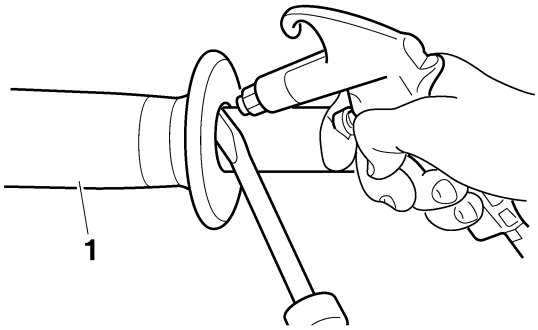

4. Remove:
   - Throttle cable housings “1”
   - Throttle grip “2”

TIP

While removing the throttle cable housing, pull back the rubber cover “3”.

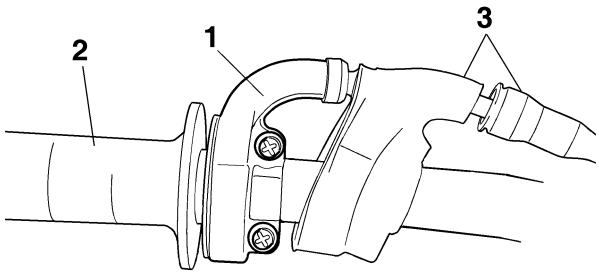

CHECKING THE HANDLEBAR

1. Check:
   - Handlebar
     Bends/cracks/damage → Replace.

WARNING

Do not attempt to straighten a bent handlebar as this may dangerously weaken it.

INSTALLING THE HANDLEBAR

1. Stand the vehicle upright on a level surface.

WARNING

Securely support the vehicle so that there is no danger of it falling over.

2. Install:
   - Damper “1”
   - Lower handlebar holders“2” (temporarily)
   - Handlebar “3”
   - Upper handlebar holders “4”

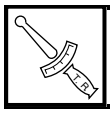	**Upper handlebar holder bolt 28 Nm (2.8 m·kgf, 20 ft·lbf)**

TIP

- Install the lower handlebar holders with them side having the greater distance “a” from the mounting bolt center facing forward.
- Installing the lower handlebar holders in the reverse direction allow the front-to-rear offset amount of the handlebar position to be changed.
- The upper handlebar holders should be installed with the punch marks “b” facing forward.
- When installing the handlebar, make sure that right and left marks “c” are in place identically on both sides.
- Install the handlebar so that the projection “d” of the upper handlebar holders is positioned at the mark on the handlebar as shown.

NOTICE

- **First, tighten the bolts on the front side of the upper handlebar holder, and then on the rear side.**
- **Turn the handlebar all the way to the left and right. If there is any contact with the fuel tank, adjust the handlebar position.**

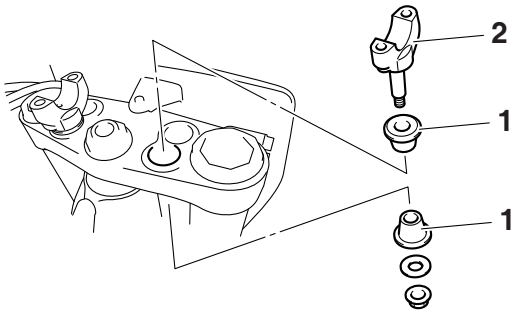

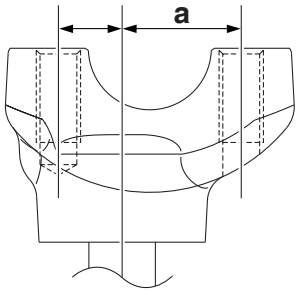

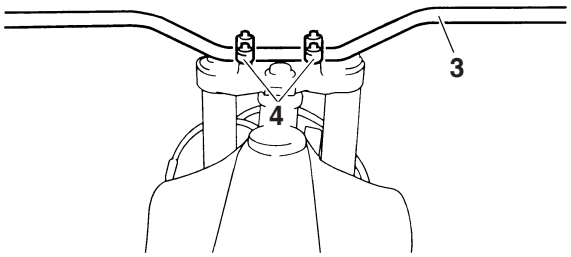

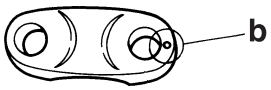

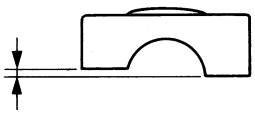

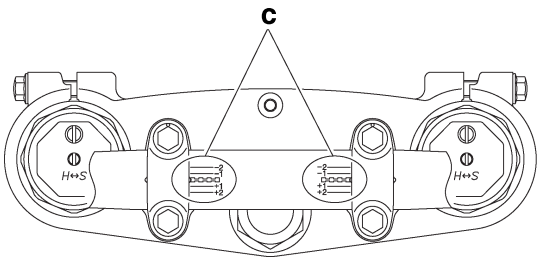

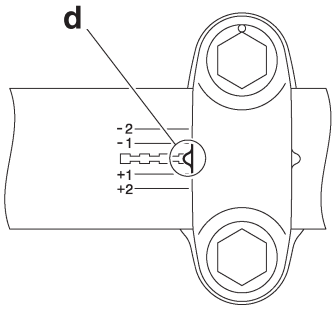

3. Tighten:
   - Lower handlebar holder nut

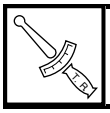	**Lower handlebar holder nut 40 Nm (4.0 m·kgf, 29 ft·lbf)**

4. Install:
   - Handlebar grip “1”

▼▼▼▼▼▼▼▼▼▼▼▼▼▼▼▼▼▼▼▼▼▼▼▼▼▼▼▼▼▼▼▼▼▼

a. Slightly coat the handlebar left end with a rubber adhesive.
b. Install the handlebar grip on the handlebar by pressing the grip from the left side.
c. Wipe off any excess adhesive with a clean cloth.

WARNING

Securely support the vehicle so that there is no danger of it falling over.

TIP

Install the handlebar grip to the handlebar so that the line “a” between the two arrow marks faces straight upward.

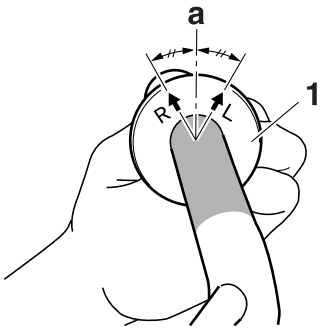

▲▲▲▲▲▲▲▲▲▲▲▲▲▲▲▲▲▲▲▲▲▲▲▲▲▲▲▲▲▲▲▲▲▲

5. Install:
   - Engine stop switch “1”
   - Clutch lever “2”
   - Clutch lever holder “3”
   - Clamp “4”

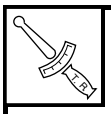

Engine stop switch screw
0.5 Nm (0.05 m·kgf, 0.36 ft·lbf)
Clutch lever holder bolt
3.8 Nm (0.38 m·kgf, 2.8 ft·lbf)

TIP

- The engine stop switch, the clutch lever, and the clutch lever holder should be installed according to the dimensions shown.
- Pass the engine stop switch lead through the middle of the clutch lever holder.

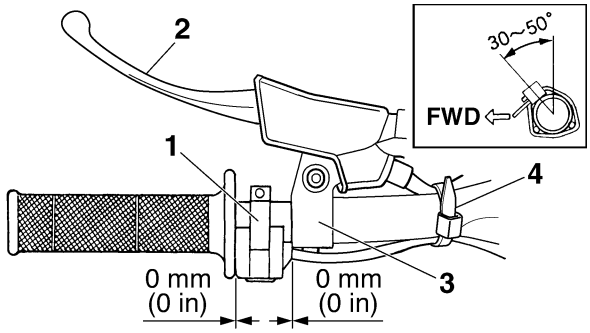

6. Install:
   - Right grip “1”
   - Collar “2”
     Apply adhesive to the tube guide “3”.

TIP

- Before applying the adhesive, wipe off grease or oil on the tube guide surface “a” with a lacquer thinner.
- Install the grip to the tube guide so that the grip match mark “b” and tube guide slot “c” form the angle as shown.

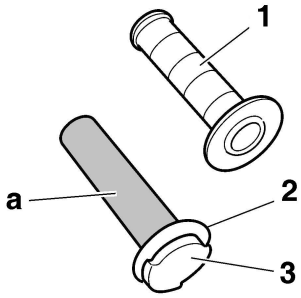

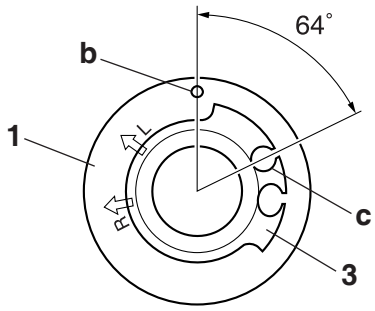

7. Install:
   - Rubber cover “1”
   - Throttle grip “2”

TIP

Apply the lithium-soap-based grease on the throttle grip sliding surface.

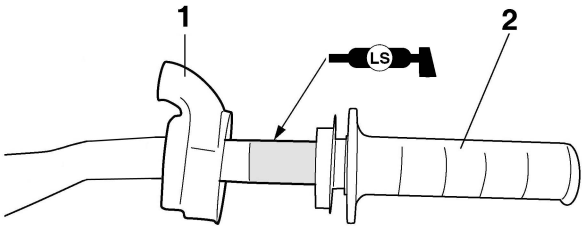

8. Install:
   - Throttle cables “1”

TIP

Slightly coat the end of throttle cable and inside of throttle grip with lithium-soap-based grease. Then, mount the throttle grip onto the handlebar.

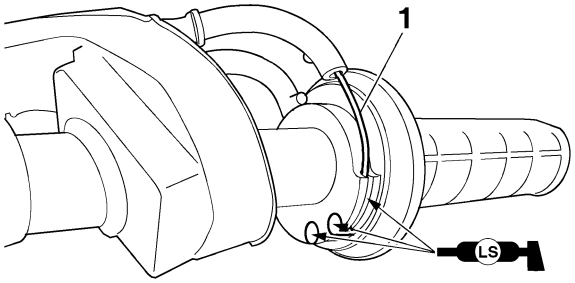

9. Install:
   - Throttle cable housings “1”
   - Screw (throttle cable housings) “2”

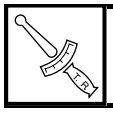

Screw (throttle cable housings)
3.8 Nm (0.38 m·kgf, 2.8 ft·lbf)

WARNING

After tightening the throttle cable housing screws, check that the throttle grip "3" moves smoothly. If it does not, retighten the screws for adjustment.

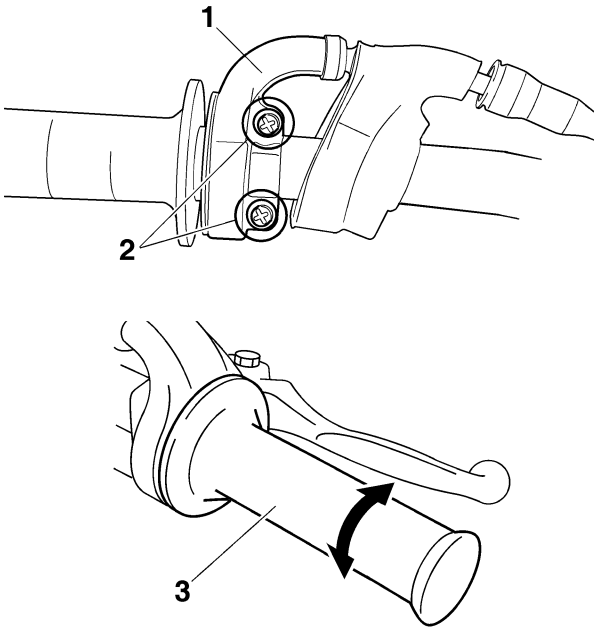

10.Install:
- Rubber cover "1"
- Cover (throttle cable housings) "2"

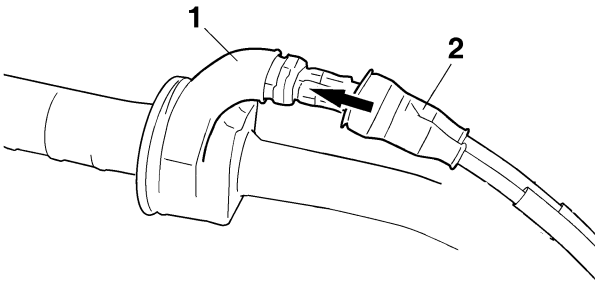

11.Install:
- Start switch "1"
- Front brake master cylinder assembly "2"
- Front brake master cylinder holder "3"
- Bolt (brake master cylinder holder) "4"
- Clamp "5"

	Front brake master cylinder holder bolt **9 Nm (0.9 m·kgf, 6.5 ft·lbf)**

TIP

- Install the brake master cylinder holder with the "UP" mark facing up.
- Install in order for the top of the front brake master cylinder assembly to be level.
- First, tighten the upper bolt, then the lower bolt.

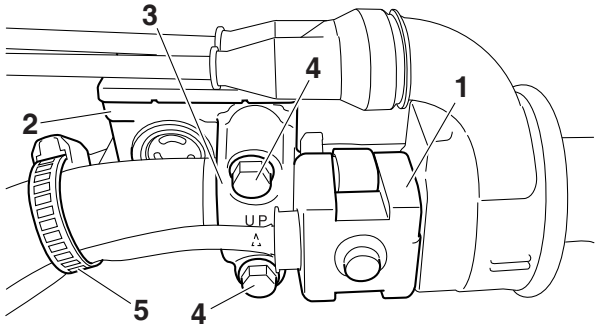

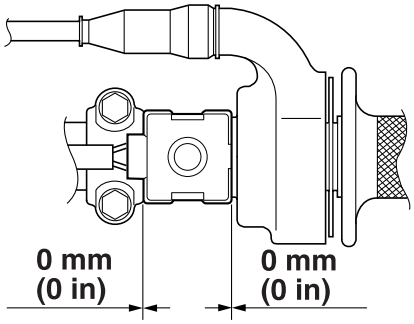

12.Install:
- Clutch cable "1"

TIP

Before installation, apply the lithium-soap-based grease to the clutch cable end.

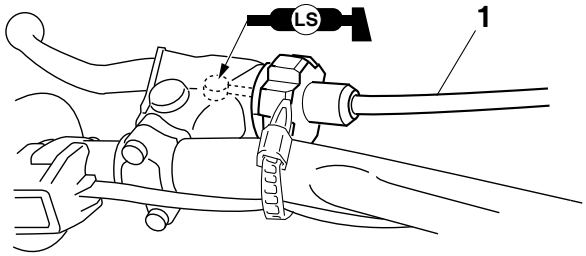

13.Adjust:
- Clutch lever free play
  Refer to "ADJUSTING THE CLUTCH LEVER FREE PLAY" on page 3-12.

	Clutch lever free play **7.0–12.0 mm (0.28–0.47 in)**

14. Adjust:
- Throttle grip free play
  Refer to “ADJUSTING THE THROTTLE GRIP FREE PLAY” on page 3-13.

	**Throttle grip free play** **3.0–5.0 mm (0.12–0.20 in)**

FRONT FORK

Removing the front fork legs

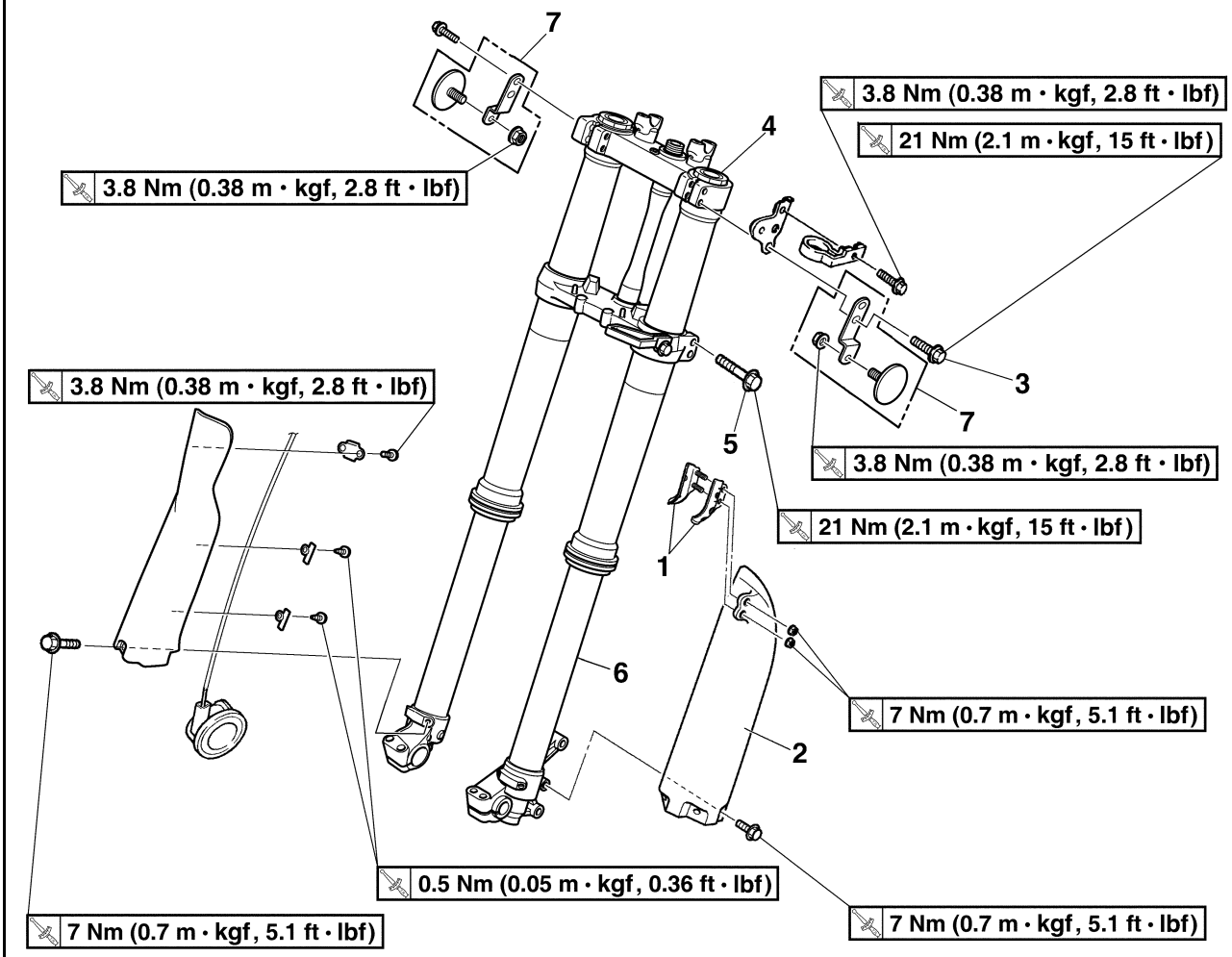

Order	Part name	Q'ty	Remarks
			Use a suitable stand to raise the front wheel off the ground.
	Front wheel		Refer to "FRONT WHEEL" on page 5-4.
	Front brake caliper		Refer to "FRONT BRAKE" on page 5-13.
1	Brake hose holder	2	
2	Protector	1	
3	Upper bracket pinch bolts	2	Loosen.
4	Damper assembly	1	Loosen.
5	Lower bracket pinch bolts	2	Loosen.
6	Front fork leg	1	
7	Reflector/Stay/Nut	1	For Canada
			For installation, reverse the removal procedure.

Disassembling the front fork leg

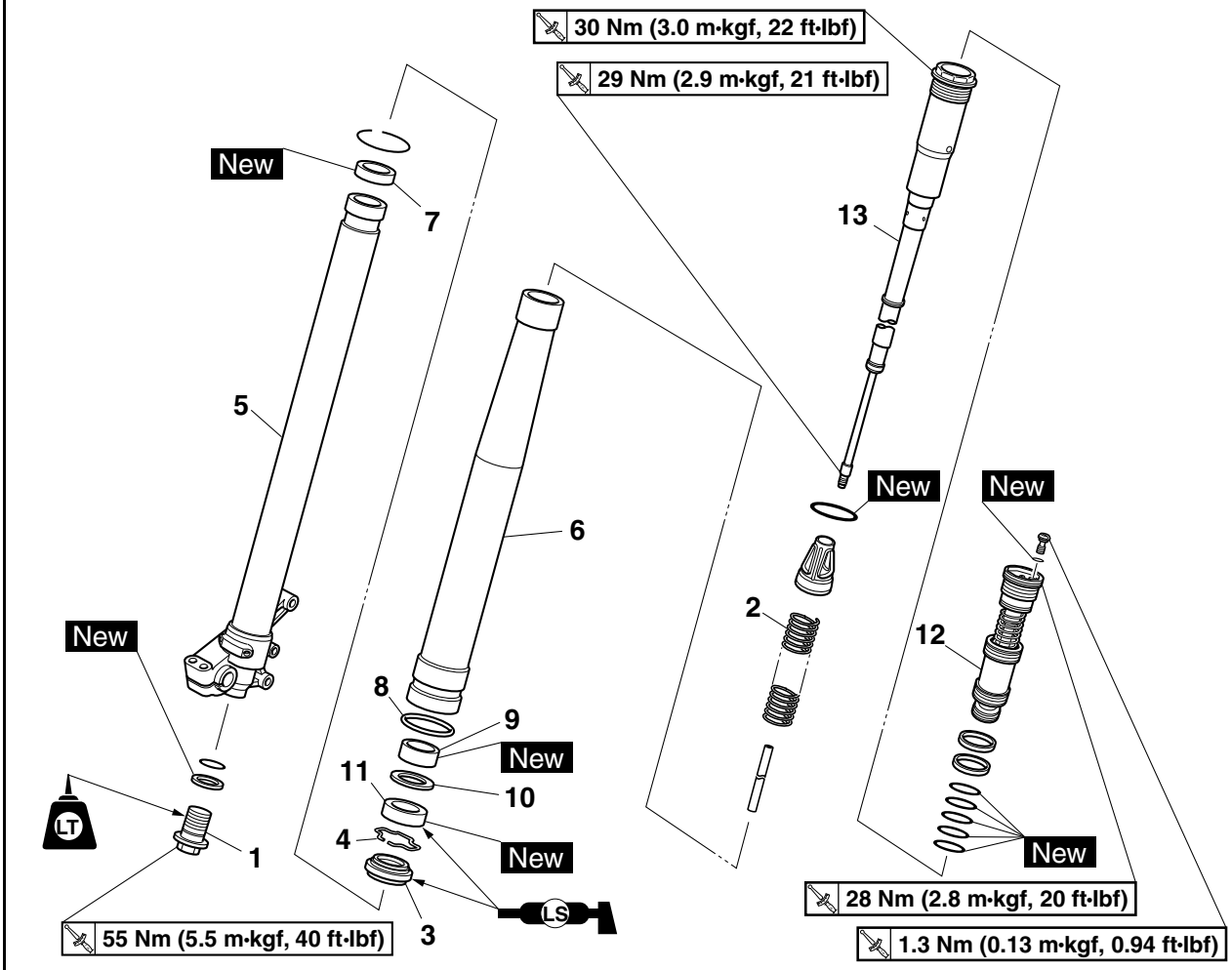

Order	Part name	Q'ty	Remarks
1	Adjuster	1	
2	Fork spring	1	
3	Dust seal	1	
4	Stopper ring	1	
5	Inner tube	1	
6	Outer tube	1	
7	Piston metal	1	
8	Protector guide	1	
9	Slide metal	1	
10	Washer	1	
11	Oil seals	1	
12	Base valve	1	
13	Damper assembly	1	
			For assembly, reverse the disassemble procedure.

REMOVING THE FRONT FORK LEGS

1. Use a suitable stand to raise the front wheel off the ground.

WARNING

Securely support the vehicle so that there is no danger of it falling over.

TIP

Record the adjusting screw setting position before loosening the adjuster and the base valve.

2. Loosen:
   - Upper bracket pinch bolts
   - Damper assembly
   - Lower bracket pinch bolts

WARNING

Before loosening the upper and lower bracket pinch bolts, support the front fork leg.

TIP

Before removing the front fork leg from the vehicle, loosen the damper assembly “1” with the cap bolt ring wrench “2”.

Cap bolt ring wrench
90890-01501
Cap bolt ring wrench
YM-01501

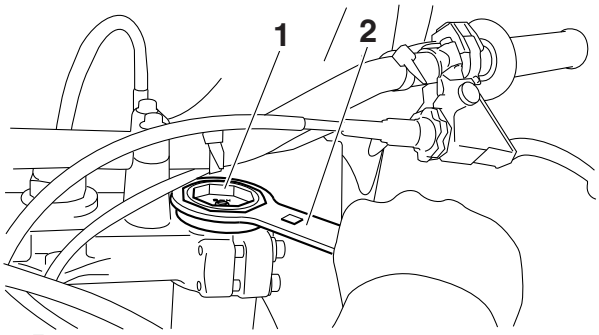

3. Remove:
   - Front fork leg (s)

DISASSEMBLING THE FRONT FORK LEGS

1. Drain:
   - Fork oil
2. Remove:
   - Adjuster “1”
     (from the inner tube)

TIP

- While compressing the inner tube “2”, set the cap bolt ring wrench “4” between the inner tube and locknut “3”.
- Hold the locknut and remove the adjuster.

NOTICE

Do not scratch the inner tube.

Cap bolt ring wrench
90890-01501
Cap bolt ring wrench
YM-01501

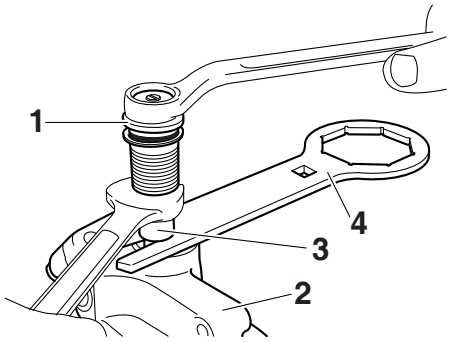

3. Remove:
   - Dust seal “1”
   - Oil seal clip “2”
     (with a flat-head screwdriver)

NOTICE

Do not scratch the inner tube.

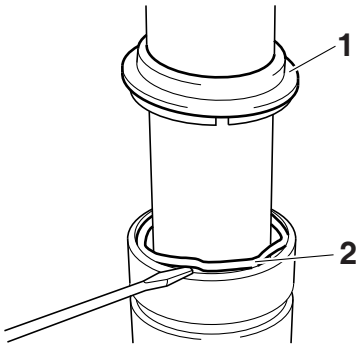

4. Remove:
   - Inner tube “1”

▼▼▼▼▼▼▼▼▼▼▼▼▼▼▼▼▼▼▼▼▼▼▼▼▼▼▼▼▼▼▼▼▼▼

a. Push in slowly “a” the inner tube just before it bottoms out and then pull it back quickly “b”.
b. Repeat this step until the inner tube can be pulled out from the outer tube.

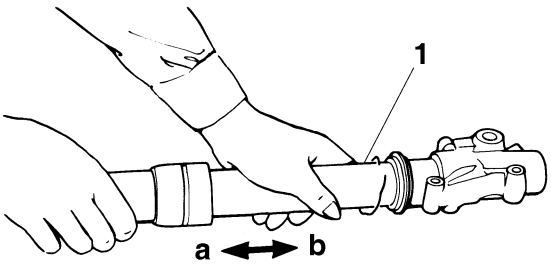

▲▲▲▲▲▲▲▲▲▲▲▲▲▲▲▲▲▲▲▲▲▲▲▲▲▲▲▲▲▲▲▲▲▲

5. Remove:
   - Base valve "1"
     (from the damper assembly)

TIP

Hold the damper assembly with the cap bolt ring wrench "2" and use the cap bolt wrench "3" to remove the base valve.

Cap bolt wrench
90890-01500
Cap bolt wrench
YM-01500
Cap bolt ring wrench
90890-01501
Cap bolt ring wrench
YM-01501

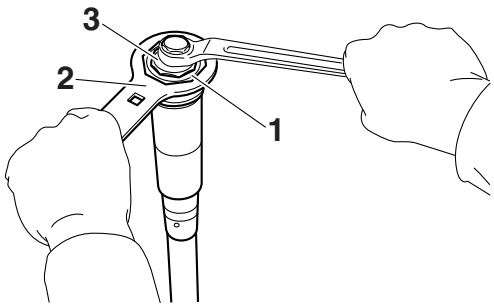

CHECKING THE FRONT FORK LEGS

1. Check:
   - Inner tube surface "a"
     Scratches → Repair or replace.
     Use #1000 grit wet sandpaper.
     Damaged oil lock piece → Replace.
   - Inner tube bends
     Out of specification → Replace.
     Use the dial gauge "1".

Inner tube bending limit
0.2 mm (0.01 in)

TIP

The bending value is shown by one half of the dial gauge reading.

⚠ WARNING

Do not attempt to straighten a bent inner tube as this may dangerously weaken it.

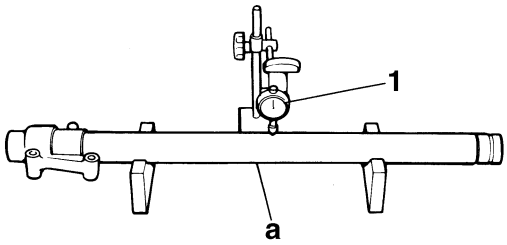

2. Check:
   - Outer tube
     Scratches/wear/damage → Replace.
3. Measure:
   - Fork spring free length "a"
     Out of specification → Replace.

Fork spring free length
470.0 mm (18.50 in)
Limit
465.0 mm (18.31 in)

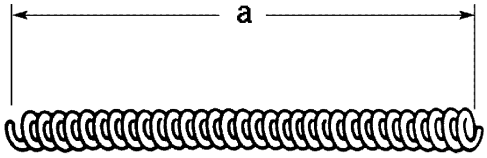

4. Check:
   - Damper assembly "1"
     Bend/damage → Replace.
   - O-ring "2"
     Wear/damage → Replace.

NOTICE

- **The front fork leg has a built-in damper adjusting rod and a very sophisticated internal construction, which are particularly sensitive to foreign material.**
- **When disassembling and assembling the front fork leg, do not allow any foreign material to enter the front fork.**

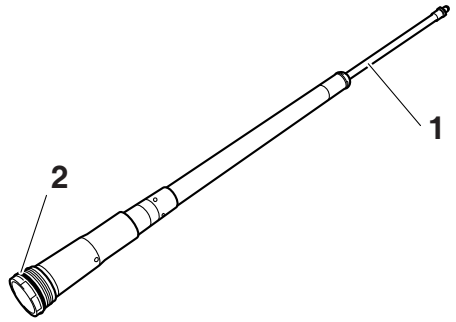

5. Check:
   - Base valve “1”
     Wear/damage → Replace.
     Contamination → Clean.
   - O-rings “2” New
     Wear/damage → Replace.
   - Base valve bushing “3”
     Wear/damage → Replace.
   - Spring “4”
     Damage/fatigue → Replace the base valve.
   - Air bleed screw “5”
     Wear/damage → Replace.

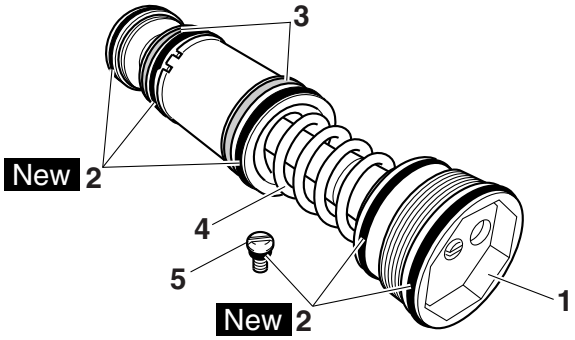

6. Check:
   - Contacting surface “a”
     Wear/damage → Replace.

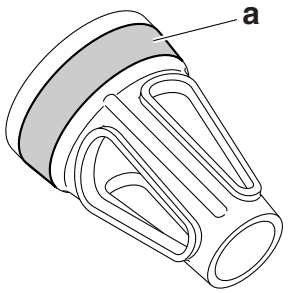

7. Check:
   - Adjuster “1”
   - O-rings “2” New
     Wear/damage → Replace.

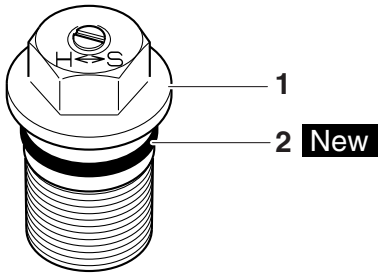

ASSEMBLING THE FRONT FORK LEGS

WARNING

- **Make sure the oil levels in both front fork legs are equal.**
- **Uneven oil levels can result in poor handling and a loss of stability.**

TIP

- When assembling the front fork leg, be sure to replace the following parts:
  - Inner tube bushing
  - Outer tube bushing
  - Oil seals
  - Copper washers
- Before assembling the front fork leg, make sure that all of the components are clean.

1. Stretch the damper assembly fully.
2. Fill:
   - Damper assembly

Recommended oil
Suspension oil S1
Standard oil amount
210 cm^3 (7.10 US oz, 7.41 Imp.oz)

NOTICE

- **Be sure to use the recommended oil. Other oils may have an adverse effect on front fork performance.**
- **When disassembling and assembling the front fork leg, take care not to allow any foreign material to enter the front fork.**

3. After filling, pump the damper assembly “1” slowly up and down (about 200 mm (7.9 in) stroke) several times to bleed the damper assembly of air.

TIP

Avoid excessive full stroke. A stroke of 200 mm (7.9 in) or more will cause air to enter. In this case, repeat the steps 1 to 3.

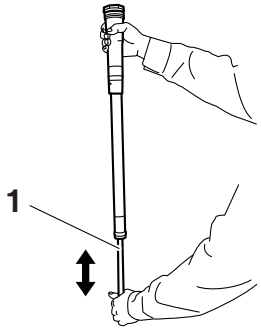

4. Measure:
   - Oil level (left and right) “a”
     Out of specification → Regulate.

Standard oil level
145–148 mm (5.71–5.83 in)
From top of fully stretched damper assembly.

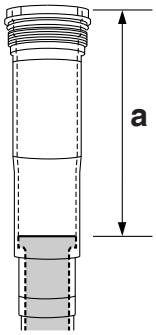

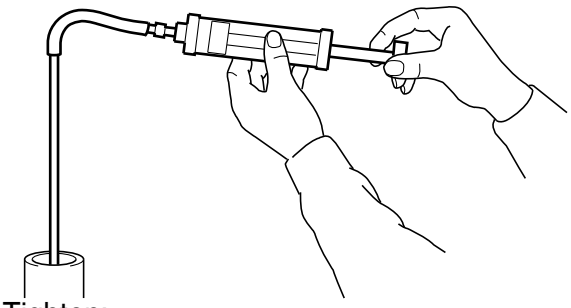

5. Tighten:
   - Locknut “1”

TIP

Fully finger tighten the locknut onto the damper assembly.

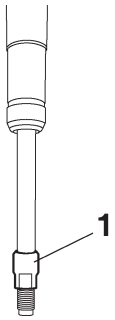

6. Loosen:
   - Compression damping force adjuster “1”

TIP

- Before loosening the damping force adjuster, record the setting position.
- Unless the damping force adjuster is fully loosened, correct damping characteristic cannot be obtained after installation.

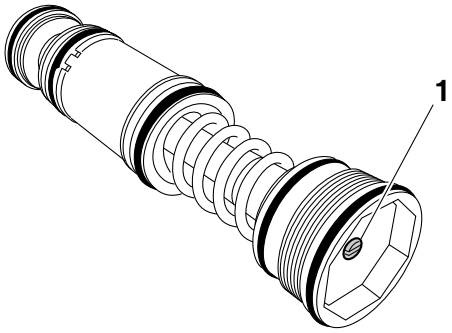

7. Install:
   - Base valve “1”
     (to the damper assembly “2”)

TIP

First bring the damper rod pressure to a maximum. Then install the base valve while releasing the damper rod pressure.

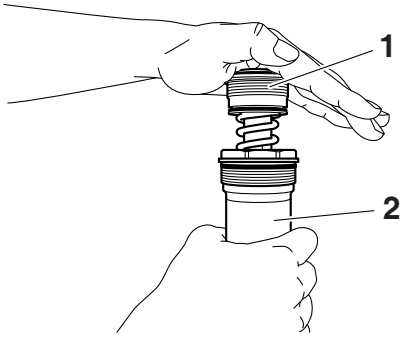

8. Check:
   - Damper assembly
     Not fully stretched → Repeat the steps 1 to 7.

9. Tighten:
   - Base valve “1”

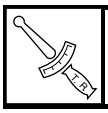	**Base valve** **28 Nm (2.8 m·kgf, 20 ft·lbf)**

TIP

Hold the damper assembly with the cap bolt ring wrench “2” and use the cap bolt wrench “3” to tighten the base valve.

	**Cap bolt wrench** **90890-01500** **Cap bolt wrench** **YM-01500** **Cap bolt ring wrench** **90890-01501** **Cap bolt ring wrench** **YM-01501**

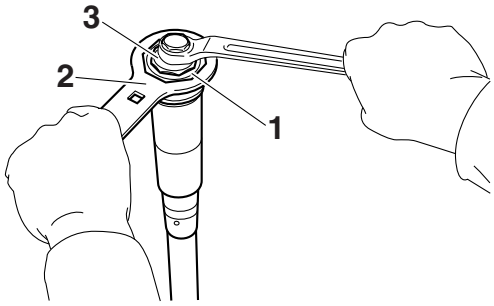

10. After filling, pump the damper assembly “1” slowly up and down more than 10 times to distribute the fork oil.

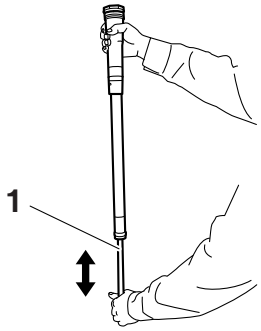

11. While protecting the damper assembly “1” with a cloth and compressing fully, allow excessive oil to overflow on the base valve side.

NOTICE

Take care not to damage the damper assembly.

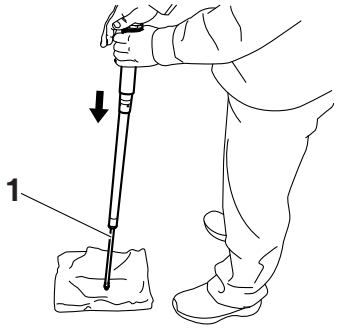

12. Allow the overflowing oil to escape at the hole “a” in the damper assembly.

TIP

The overflow measures about 8 cm^3 (0.27 US oz, 0.28 Imp.oz).

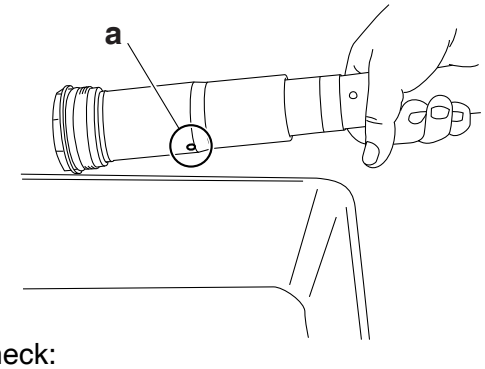

13. Check:
   - Damper assembly smooth movement
     Tightness/binding/rough spots → Repeat the steps 1 to 12.

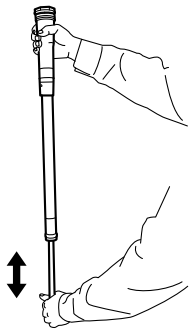

14. Install:
   - Dust seal “1” New
   - Oil seal clip “2”
   - Oil seals “3” New
   - Washer “4”
   - Outer tube bushing “5” New
     (to the inner tube “6”)

NOTICE

Make sure that the numbered side of the oil seal faces bottom side.

TIP

- Apply the lithium-soap-based grease on the dust seal lip and oil seal lip.
- Apply the fork oil on the inner tube.
- When installing the oil seal, use vinyl seat “a” with fork oil applied to protect the oil seal lip.

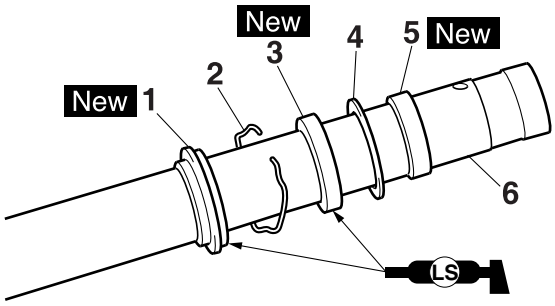

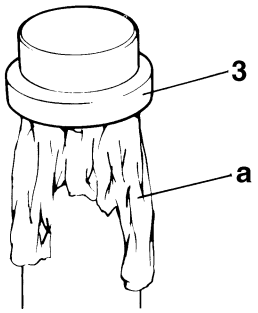

15.Install:
- Inner tube bushing “1” New

TIP

Install the inner tube bushing onto the slot on inner tube.

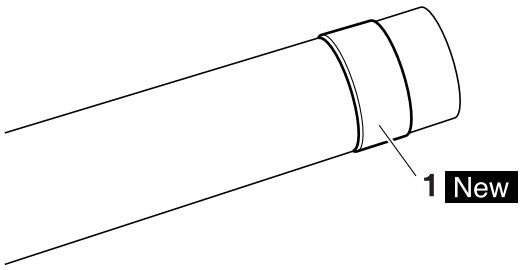

16.Install:
- Outer tube “1”
  (to the inner tube “2”)

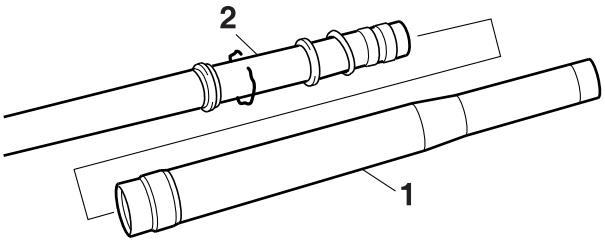

17.Install:
- Inner tube bushing “1”
- Washer “2”
  (to the outer tube)

TIP

Press the inner tube bushing into the outer tube with fork seal driver “3”.

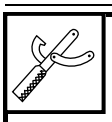

Fork seal driver
90890-01502
Fork seal driver (48)
YM-A0948

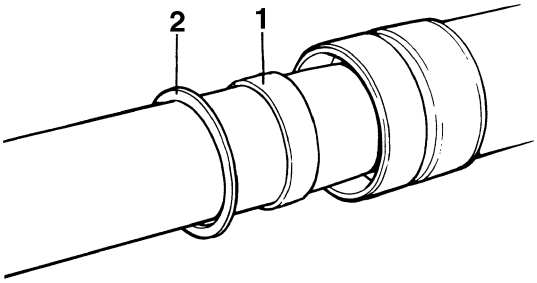

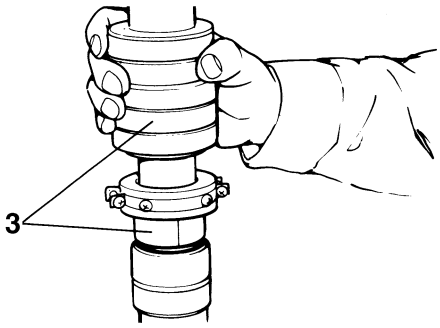

18.Install:
- Oil seals “1” New

TIP

Using a fork seal driver “2”, press the oil seal in until the stopper ring groove fully appears.

Fork seal driver
90890-01502
Fork seal driver (48)
YM-A0948

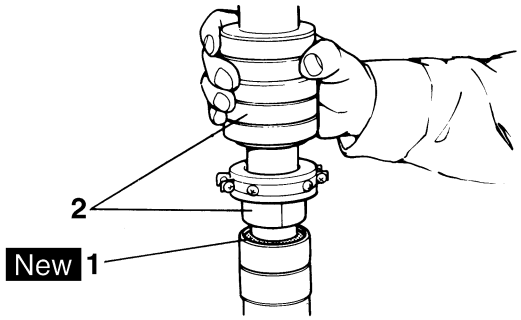

19.Install:
- Oil seal clip “1”

TIP

Fit the oil seal clip correctly in the groove in the outer tube.

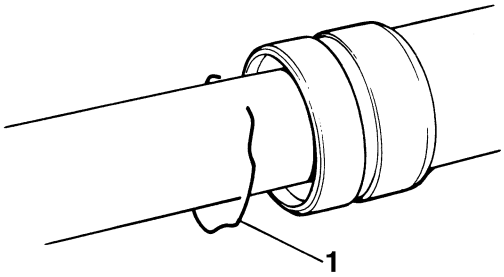

20.Install:
- Dust seal “1” New

TIP

Apply lithium-soap-based grease on the inner tube.

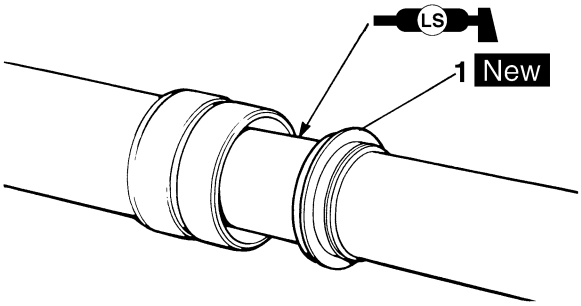

21.Check:
- Inner tube smooth movement
  Tightness/binding/rough spots → Repeat the steps 14 to 20.

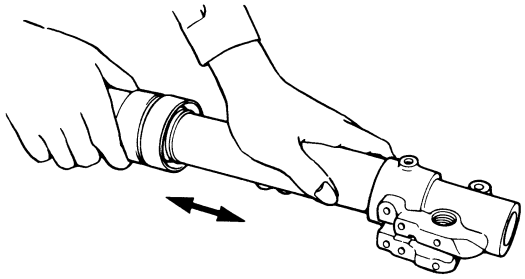

22.Measure:
- Distance “a”
  Out of specification → Turn into the locknut.

Distance “a”
16 mm (0.63 in) or more
Between the damper assembly “1” bottom and locknut “2” bottom.

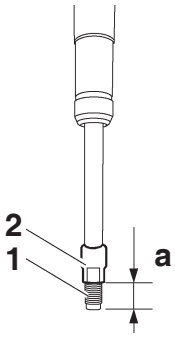

23.Install:
- Collar “1”
- Fork spring “2”
  (to the damper assembly “3”)

TIP

Install the collar with its larger dia. end “a” facing the fork spring.

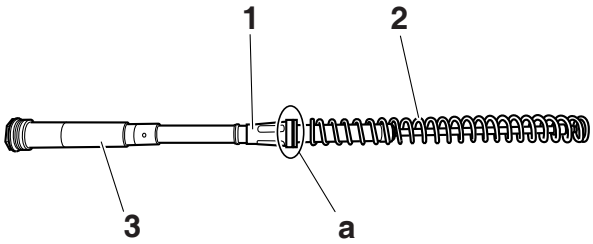

24.Install:
- Damper assembly “1”
  (to the inner tube “2”)

NOTICE

Allow the damper assembly to slide slowly down the inner tube until it contacts the bottom of the inner tube. Be careful not to damage the inner tube.

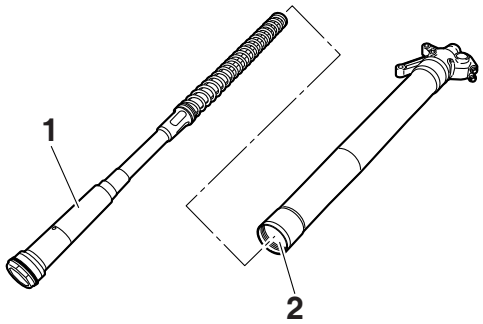

25.Loosen:
- Rebound damping force adjuster “1”

TIP

- Before loosening the damping force adjuster, record the setting position.
- Unless the damping force adjuster is fully loosened, correct damping characteristic cannot be obtained after installation.

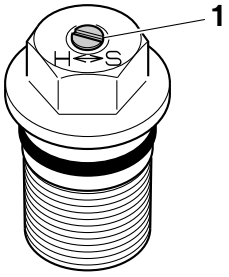

26.Install:
- Damper adjusting rod “1”
- Copper washer “2” New
- Adjuster “3”
  (to the damper assembly “4”)

TIP

- While compressing the inner tube “5”, set the cap bolt ring wrench “7” between the inner tube and locknut “6”.
- Fully finger tighten the adjuster onto the damper assembly.

Cap bolt ring wrench
90890-01501
Cap bolt ring wrench
YM-01501

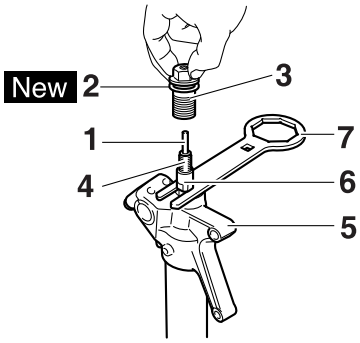

27.Measure:
- Gap “a” between the adjuster “1” and the locknut “2”
  Out of specification → Retighten and readjust the locknut.

Gap “a” between the adjuster and the locknut
0.5–1.0 mm (0.02–0.04 in)

TIP

If it is installed with a gap out of specification, correct damping force cannot be obtained.

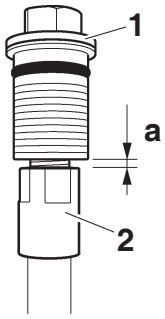

28.Tighten:
- Adjuster (locknut) “1”

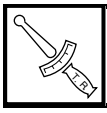

Adjuster (locknut)
29 Nm (2.9 m·kgf, 21 ft·lbf)

TIP

Hold the locknut “2” and tighten the adjuster.

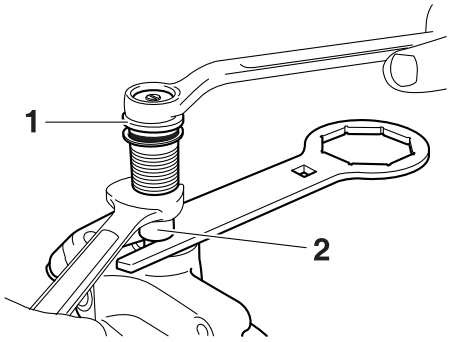

29.Install:
- Adjuster “1”
  (to the inner tube)

	**Adjuster** **55 Nm (5.5 m·kgf, 40 ft·lbf)** **LOCTITE®**

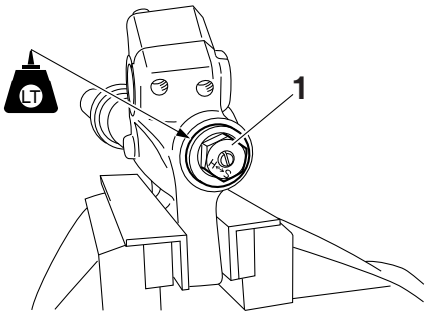

30.Fill:
- Front fork leg

	**Recommended oil** **Suspension oil S1** **Standard oil amount** **340 cm^3 (11.50 US oz, 11.99 Imp.oz)** **Extent of adjustment** **300–365 cm^3 (10.14–12.34 US oz, 10.58–12.87 Imp.oz)**

NOTICE

- **Be sure to use the recommended oil. Other oils may have an adverse effect on front fork performance.**
- **When disassembling and assembling the front fork leg, do not allow any foreign material to enter the front fork.**

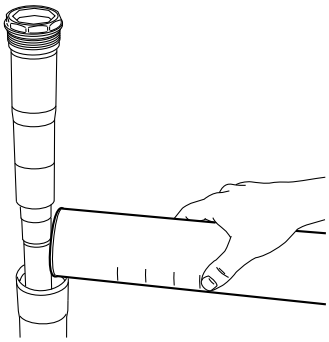

31.Install:
- Damper assembly “1”
  (to the outer tube)

TIP

Temporarily tighten the damper assembly.

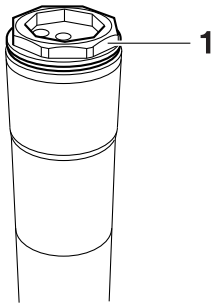

32.Install:
- Protector guide “1”

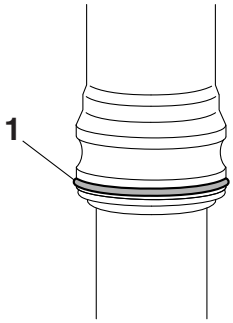

INSTALLING THE FRONT FORK LEGS

1. Install:
   - Front fork “1”

TIP

- Temporarily tighten the pinch bolts (lower bracket).
- Do not tighten the pinch bolts (upper bracket) yet.

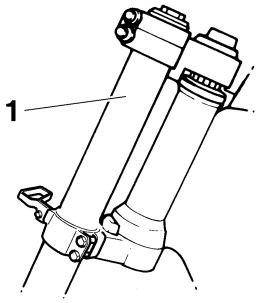

2. Tighten:
   • Damper assembly “1”

	Damper assembly **30 Nm (3.0 m·kgf, 22 ft·lbf)**

TIP

Use the cap bolt ring wrench “2” to tighten the damper assembly.

	Cap bolt ring wrench **90890-01501** **Cap bolt ring wrench** **YM-01501**

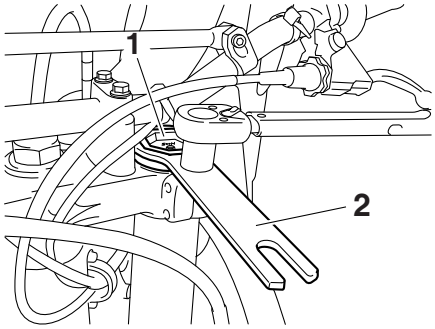

3. Adjust:
   • Front fork top end “a”

	Front fork top end (standard) “a” **5 mm (0.20 in)**

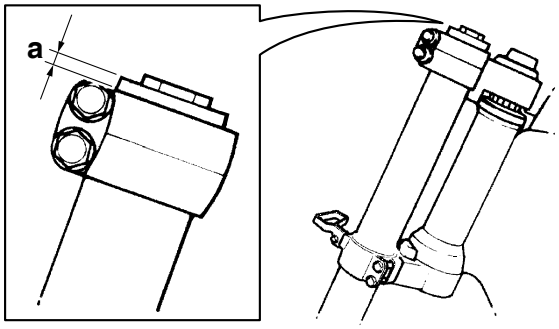

4. Tighten:
   • Pinch bolt (upper bracket) “1”

	Upper bracket pinch bolts **21 Nm (2.1 m·kgf, 15 ft·lbf)**

   • Pinch bolt (lower bracket) “2”

	Lower bracket pinch bolts **21 Nm (2.1 m·kgf, 15 ft·lbf)**

WARNING

Tighten the lower bracket to specified torque. If torqued too much, it may cause the front fork to malfunction.

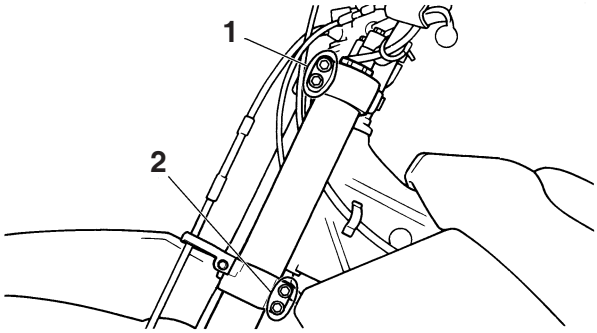

5. Install:
   • Speed sensor lead “1”
   • Plate 1 “2”
   (to the right front fork protector)

	Plate 1 bolt **3.8 Nm (0.38 m·kgf, 2.8 ft·lbf)**

TIP

Install the speed sensor lead so that its paint “a” directs as shown and align the bottom “b” of the plate 1 with the same paint.

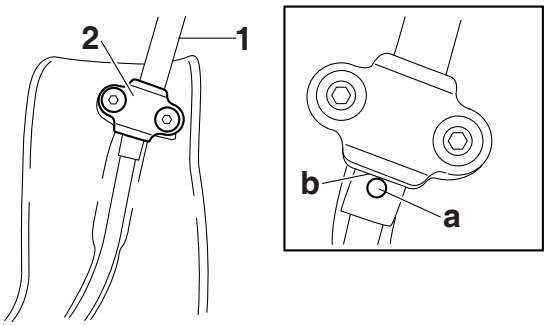

6. Install:
   - Speed sensor lead “1”
   - Plate 2 “2”
     (to the right front fork protector)

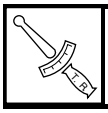	**Plate 2 screw** **0.5 Nm (0.05 m·kgf, 0.36 ft·lbf)**

TIP

Install the plate 2 in the direction as shown.

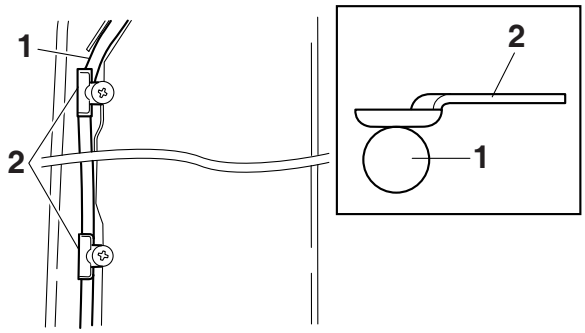

7. Install:
   - Protector “1”
   - Bolt (protector) “2”

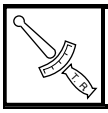	**Bolt (protector)** **7 Nm (0.7 m·kgf, 5.1 ft·lbf)**

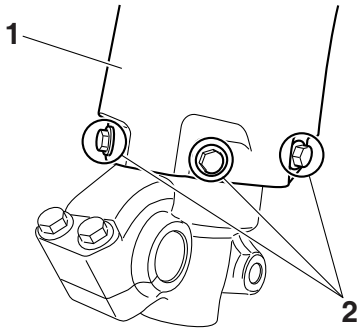

8. Adjust:
   - Rebound damping force

TIP

Turn in the damping adjuster “1” finger-tight and then turn out to the originally set position.

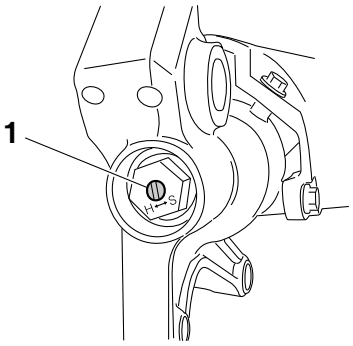

9. Adjust:
   - Compression damping force

TIP

Turn in the damping adjuster “1” finger-tight and then turn out to the originally set position.

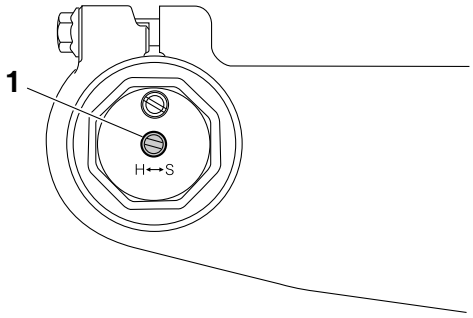

STEERING HEAD

Removing the lower bracket

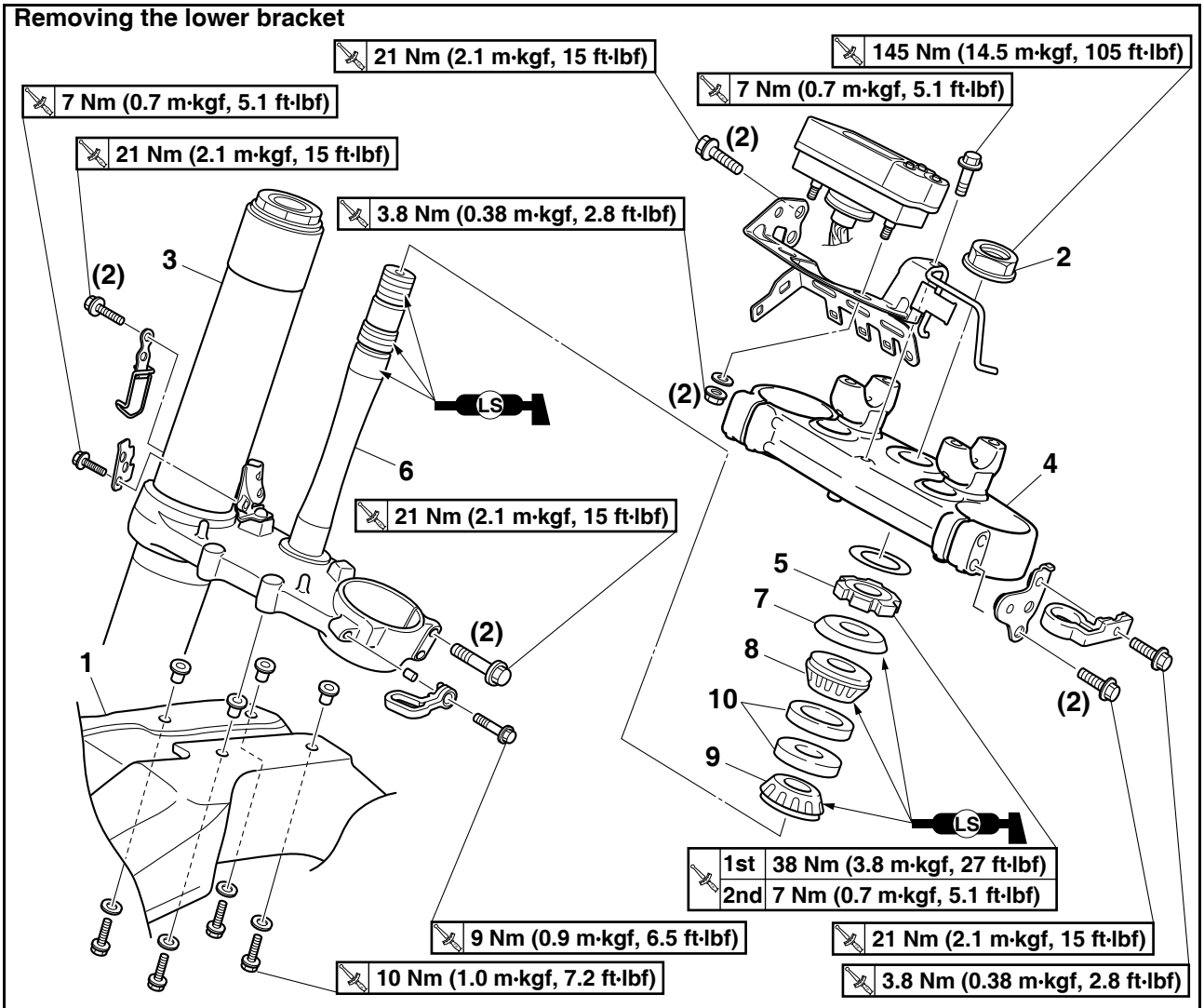

Order	Part name	Q'ty	Remarks
			Use a suitable stand to raise the front wheel off the ground.
	Headlight assembly/multi-function meter/front fender		Refer to "GENERAL CHASSIS" on page 5-1.
	Handlebar		Refer to "HANDLEBAR" on page 5-33.
1	Front fender	1	
2	Steering stem nut	1	
3	Front fork leg (s)	2	Refer to "FRONT FORK" on page 5-40.
4	Upper bracket	1	
5	Steering ring nut	1	
6	Lower bracket	1	
7	Bearing race cover	1	
8	Upper bearing	1	
9	Bearing (lower side)	1	
10	Bearing races	2	
			For installation, reverse the removal procedure.

REMOVING THE LOWER BRACKET

1. Use a suitable stand to raise the front wheel off the ground.

WARNING

Securely support the vehicle so that there is no danger of it falling over.

2. Remove:
   - Rng nut “1”

TIP

Remove the ring nut with the steering nut wrench “2”.

Steering nut wrench
90890-01403
Exhaust flange nut wrench
YU-A9472

WARNING

Securely support the lower bracket so that there is no danger of it falling.

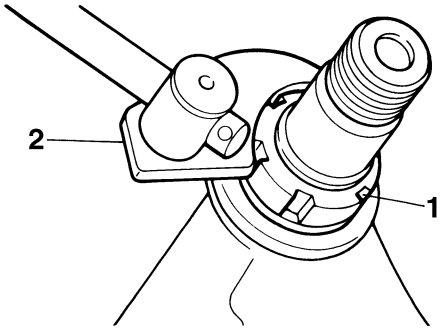

CHECKING THE STEERING HEAD

1. Wash with kerosene:
   - Bearing
   - Bearing races
2. Check:
   - Bearing
   - Bearing races
     Damage/pitting → Replace.
3. Replace:
   - Bearing
   - Bearing races

▼▼▼▼▼▼▼▼▼▼▼▼▼▼▼▼▼▼▼▼▼▼▼▼▼▼▼▼▼▼▼▼▼▼

a. Remove the bearing race from the steering head pipe with a long rod “1” and a hammer.
b. Remove the bearing race from the lower bracket with a chisel “2” and a hammer.
c. Install a new bearing race.

NOTICE

If the bearing race is not installed properly, the steering head pipe could be damaged.

TIP

Always replace the bearing and the bearing race as a set.

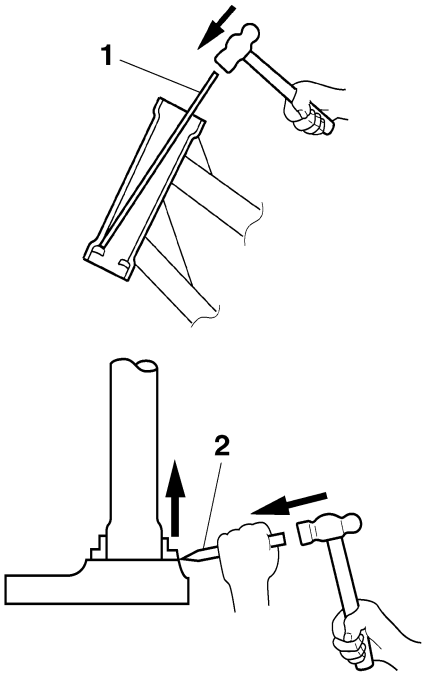

▲▲▲▲▲▲▲▲▲▲▲▲▲▲▲▲▲▲▲▲▲▲▲▲▲▲▲▲▲▲▲▲▲▲

4. Check:
   - Upper bracket
   - Lower bracket
     (along with the steering stem)
     Bends/cracks/damage → Replace.

INSTALLING THE STEERING HEAD

1. Install:
   - Lower bearing “1”

TIP

Apply the lithium-soap-based grease on the dust seal lip and bearing inner circumference.

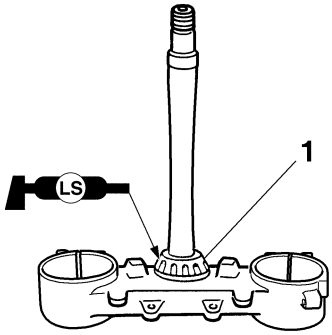

2. Install:
   - Bearing races
   - Upper bearing “1”
   - Bearing race cover “2”

TIP

Apply the lithium-soap-based grease on the bearing and bearing race cover lip.

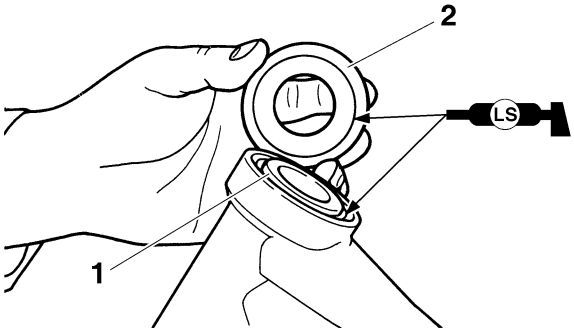

3. Install:
   - Lower bracket “1”

TIP

Apply the lithium-soap-based grease on the bearing, the portion “a” and thread of the steering stem.

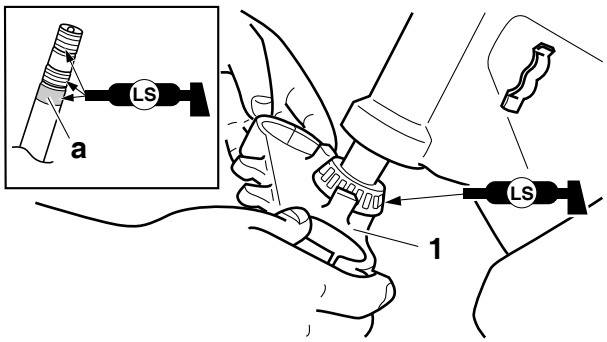

4. Install:
   - Steering ring nut “1”

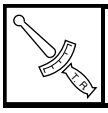	**Steering ring nut** **7 Nm (0.7 m·kgf, 5.1 ft·lbf)**

TIP

Install the steering nut with its stepped side “a” facing downward.

Tighten the steering ring nut with a steering nut wrench “2”.
Refer to “CHECKING AND ADJUSTING THE STEERING HEAD” on page 3-36.

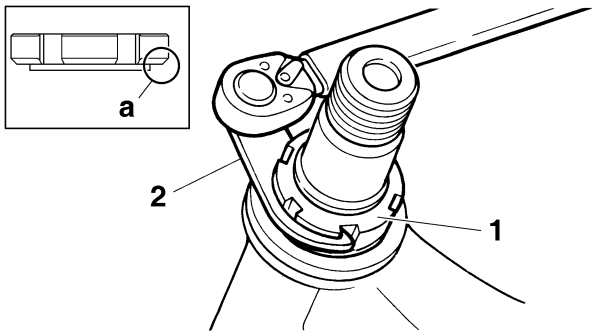

5. Check the steering stem by turning this lock to lock. If there is any binding, remove the steering stem and check the steering bearing.

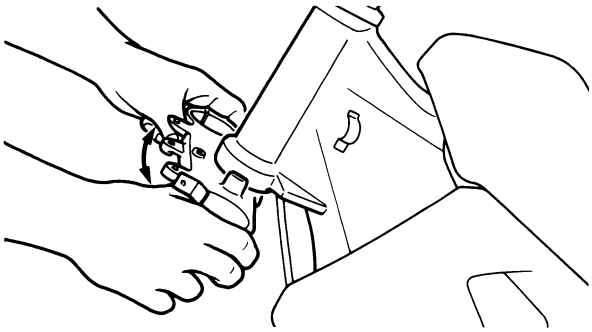

6. Install:
   - Washer “1”

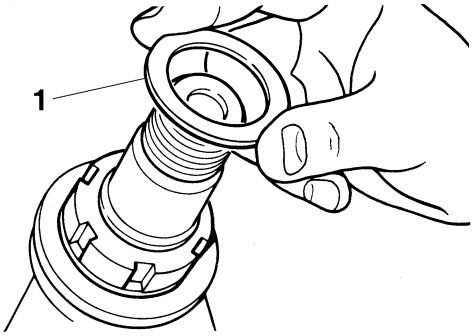

7. Install:
   - Front fork “1”
   - Upper bracket “2”

TIP

- Temporarily tighten the pinch bolts (lower bracket).
- Do not tighten the pinch bolts (upper bracket) yet.

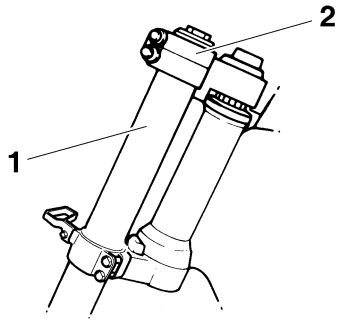

8. Install:
   - Steering stem nut “1”

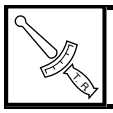	**Steering stem nut** **145 Nm (14.5 m·kgf, 105 ft·lbf)**

TIP

Apply the lithium-soap-based grease to the contact surface of the steering stem nut when installing.

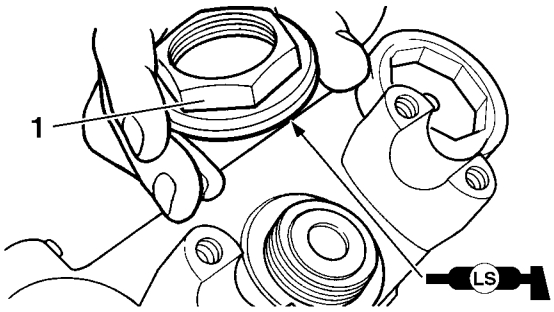

9. After tightening the nut, check the steering for smooth movement. If not, adjust the steering by loosening the steering ring nut little by little.
10. Adjust:
   - Front fork top end “a”

	Front fork top end (standard) “a” 5 mm (0.20 in)

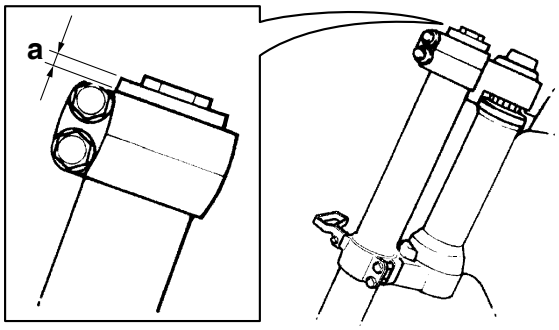

11. Tighten:
   - Pinch bolt (upper bracket) “1”

	Upper bracket pinch bolts 21 Nm (2.1 m·kgf, 15 ft·lbf)

   - Pinch bolt (lower bracket) “2”

	Lower bracket pinch bolts 21 Nm (2.1 m·kgf, 15 ft·lbf)

WARNING

Tighten the lower bracket to specified torque. If torqued too much, it may cause the front fork to malfunction.

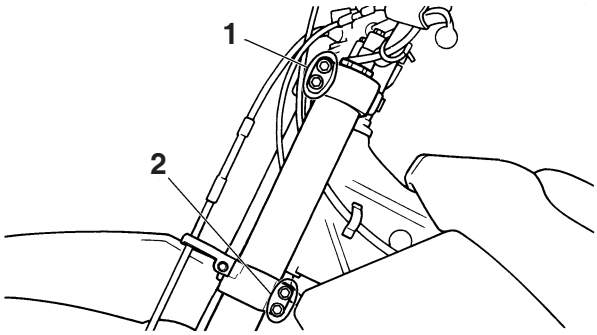

12. Install:
   - Speed sensor lead holder “1”
   - Speed sensor lead clamp “2”

	Speed sensor lead holder bolt 13 Nm (1.3 m·kgf, 9.4 ft·lbf) Speed sensor lead clamp bolt 7 Nm (0.7 m·kgf, 5.1 ft·lbf)

TIP

- Insert the end of the speed sensor lead holder in the hole in the lower bracket “a”.
- Install so that the marking “b” on the speed sensor lead aligns with the speed sensor lead holder edge.
- Install the speed sensor lead clamp while inserting it in the hole “c” in the speed sensor lead holder.

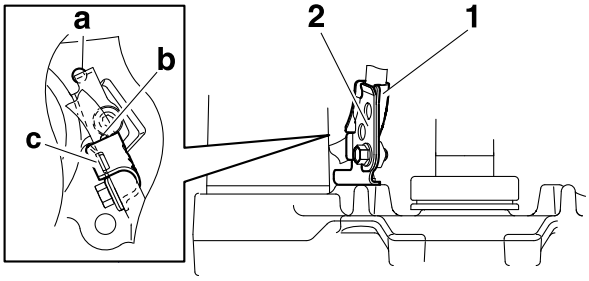

REAR SHOCK ABSORBER ASSEMBLY

Removing the rear shock absorber assembly

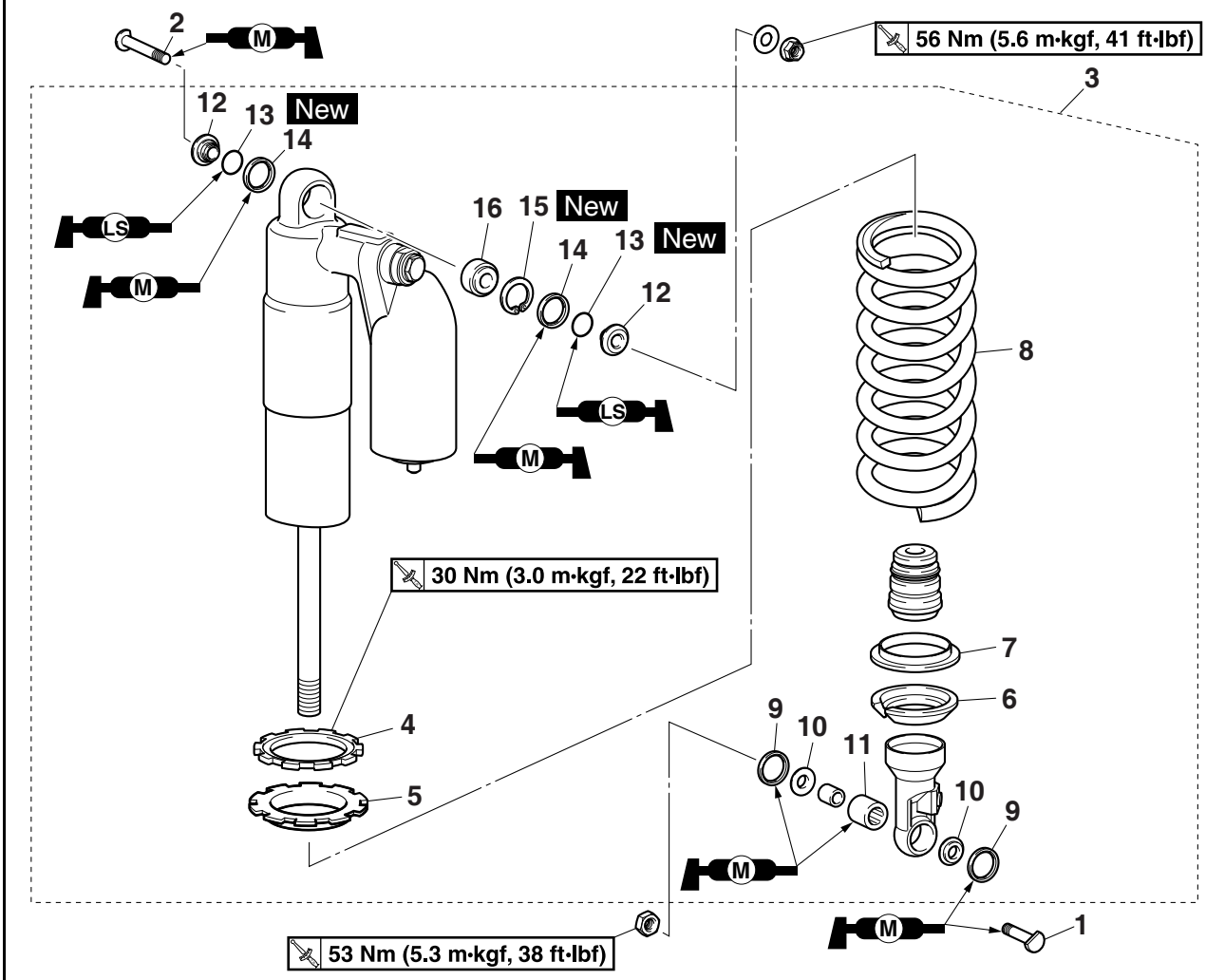

Order	Part name	Q'ty	Remarks
	Seat		Refer to "GENERAL CHASSIS" on page 5-1.
	Side cover (left / right)		Refer to "GENERAL CHASSIS" on page 5-1.
	Air scoop (left / right)		Refer to "GENERAL CHASSIS" on page 5-1.
	Fuel tank		Refer to "FUEL TANK" on page 8-1.
1	Rear shock absorber assembly lower bolt	1	
2	Rear shock absorber assembly upper bolt	1	
3	Rear shock absorber assembly	1	
4	Locknut	1	
5	Adjusting nut	1	
6	Lower spring guide	1	
7	Upper spring guide	1	
8	Spring	1	
9	Dust seal	2	
10	Collars	2	
11	Bushing	1	
12	Collars	2	

Removing the rear shock absorber assembly

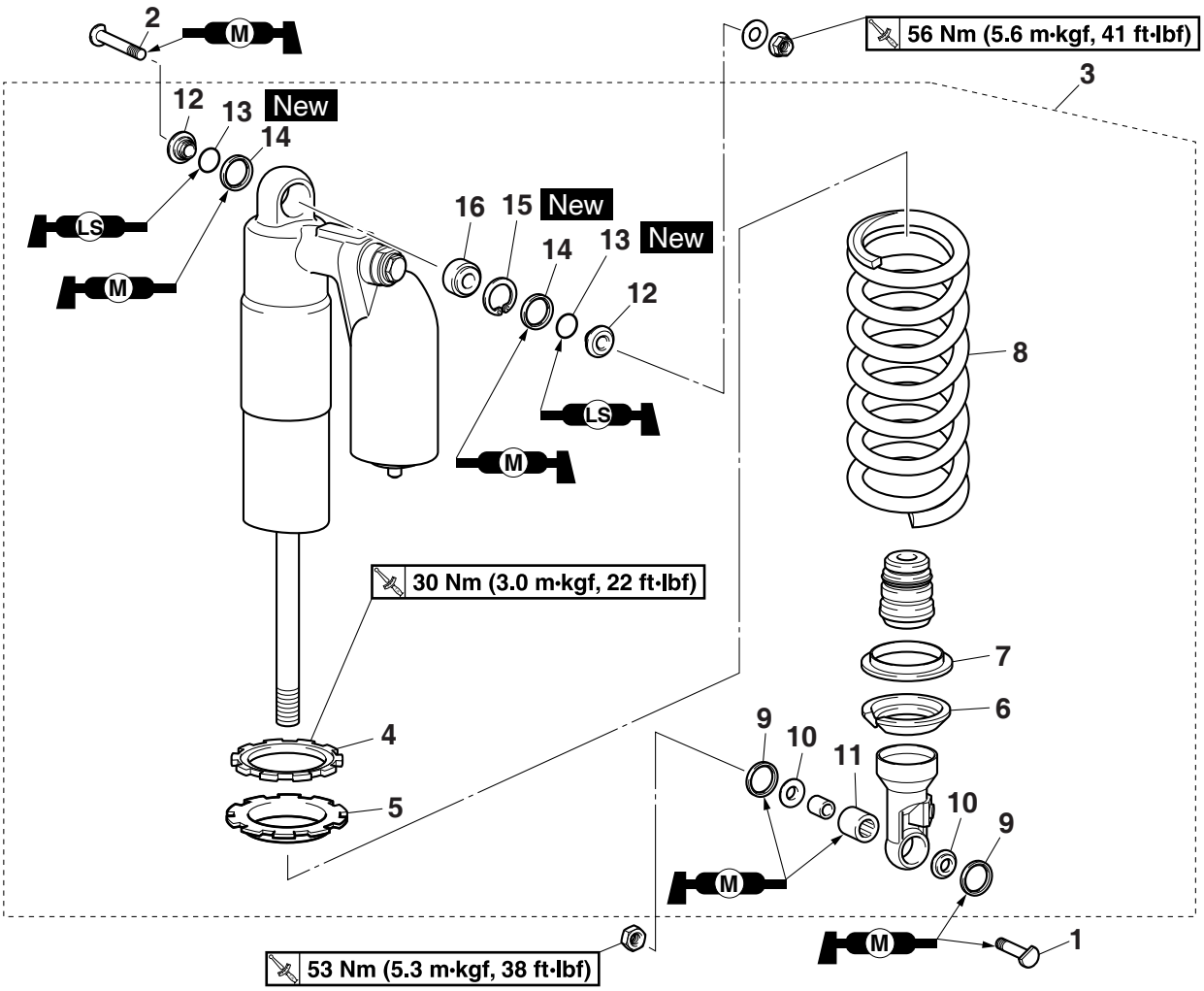

Order	Part name	Q'ty	Remarks
13	O-ring	2	
14	Dust seal	2	
15	Stopper ring	1	
16	Bearing	1	
			For installation, reverse the removal procedure.

Disassembling the relay arm

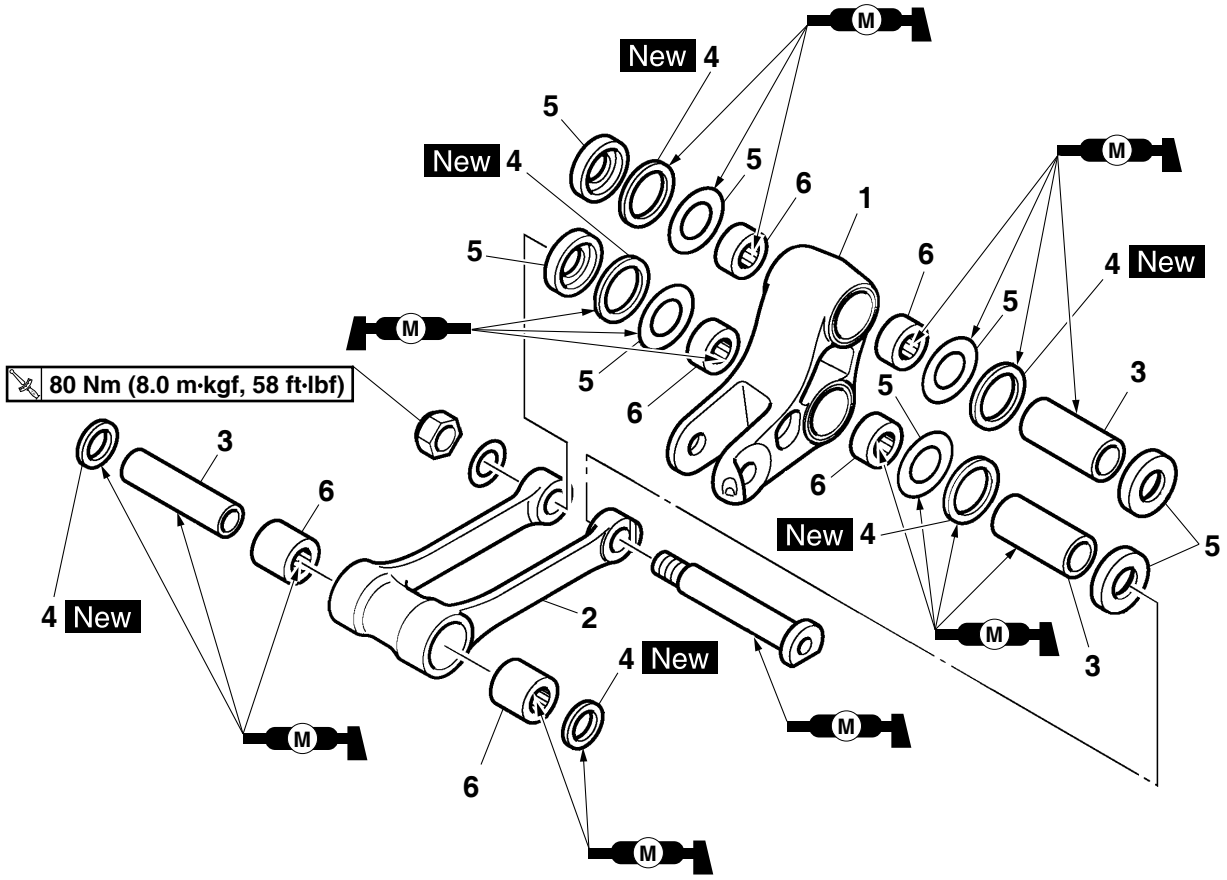

Order	Part name	Q'ty	Remarks
1	Relay arm	1	
2	Connecting arm	1	
3	Collars	3	
4	Oil seals	6	
5	Washers	8	
6	Bearing	6	
			For assembly, reverse the disassemble procedure.

HANDLING THE REAR SHOCK ABSORBER

WARNING

This rear shock absorber contains highly compressed nitrogen gas. Before handling the rear shock absorber, read and make sure that you understand the following information. The manufacturer cannot be held responsible for property damage or personal injury that may result from improper handling of the rear shock absorber.

- **Do not tamper or attempt to open the rear shock absorber.**
- **Do not subject the rear shock absorber to an open flame or any other source of high heat. High heat can cause an explosion due to excessive gas pressure.**
- **Do not deform or damage the rear shock absorber in any way. Rear shock absorber damage will result in poor damping performance.**

TIP

A break-in is required up to about 50 km of running.

DISPOSING OF A REAR SHOCK ABSORBER

Before disposing the rear shock absorber, be sure to extract the nitrogen gas from valve “1”.

WARNING

- **Wear protective glasses to prevent your eyes from damage due to possible gas or metal chips scattered.**
- **To dispose of a damaged or a worn-out rear shock absorber, take the unit to your Yamaha dealer for this disposal procedure.**

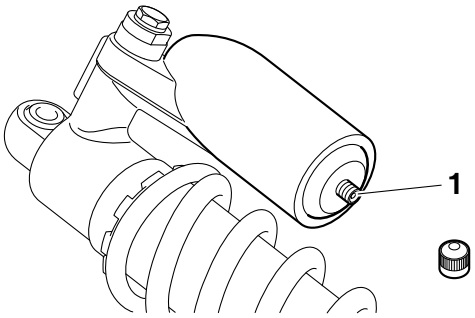

REMOVING THE REAR SHOCK ABSORBER ASSEMBLY

1. Use a suitable stand to raise the rear wheel off the ground.

WARNING

Securely support the vehicle so that there is no danger of it falling over.

2. Remove:
   - Rear shock absorber assembly lower bolt “1”

TIP

While removing the rear shock absorber assembly lower bolt, hold the swingarm so that it does not drop down.

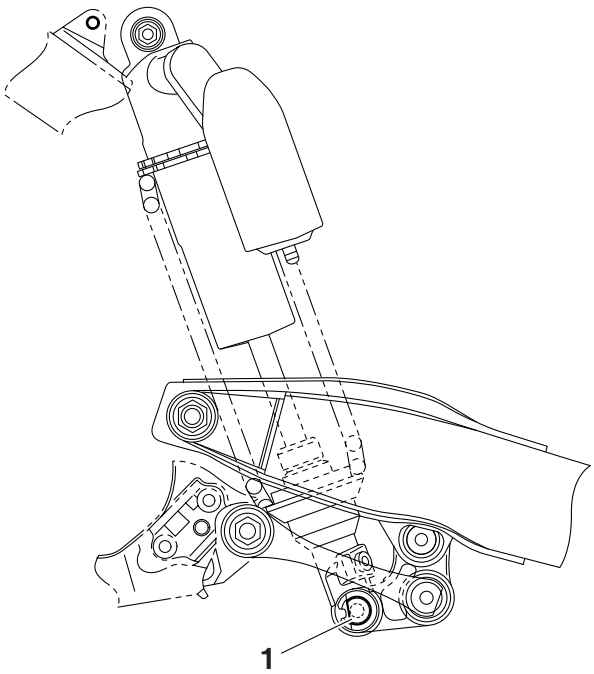

3. Remove:
   - Rear shock absorber assembly upper bolt
   - Rear shock absorber assembly

REMOVING THE BEARING

1. Remove:
   - Stopper ring (upper bearing) “1”

TIP

Press in the bearing while pressing its outer race and remove the stopper ring.

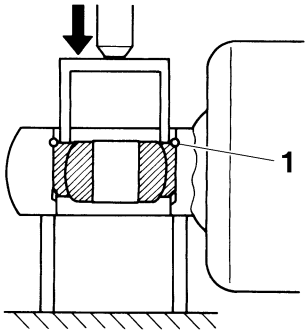

2. Remove:
   - Upper bearing “1”

TIP

Remove the bearing by pressing its outer race.

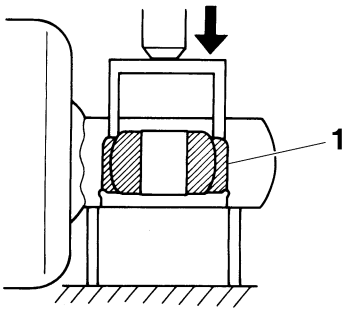

3. Remove:
   - Lower bearing “1”

TIP

Remove the bearing by pressing its outer race.

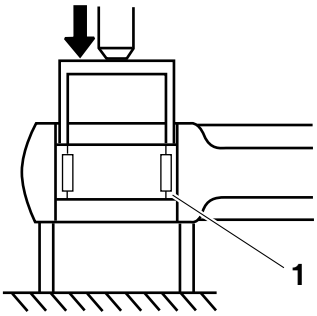

CHECKING THE REAR SHOCK ABSORBER ASSEMBLY

1. Check:
   - Rear shock absorber rod
     Bends/damage → Replace the rear shock absorber assembly.
   - Rear shock absorber
     Gas leaks/oil leaks → Replace the rear shock absorber assembly.
   - Spring
     Damage/wear → Replace.
   - Spring guide
     Damage/wear → Replace.
   - Bearing
     Damage/wear → Replace.
   - Bolts
     Bends/damage/wear → Replace.

CHECKING THE CONNECTING ARM AND RELAY ARM

1. Check:
   - Connecting arm
   - Relay arm
     Damage/wear → Replace.
2. Check:
   - Bearing
   - Spacers
     Damage/pitting/scratches → Replace the bearings and spacers as a set.
3. Check:
   - Oil seals
     Damage/pitting → Replace.

INSTALLING THE RELAY ARM

1. Lubricate:
   - Oil seals
   - Bearing
   - Spacers
   - Washers
   - Collars

	Recommended lubricant **Molybdenum disulfide grease**

2. Install:
   - Bearing “1”
   - Washer “2”
   - Oil seals “3” New
     (to relay arm “4”)

	Installed depth “a” **0 mm (0 in)**

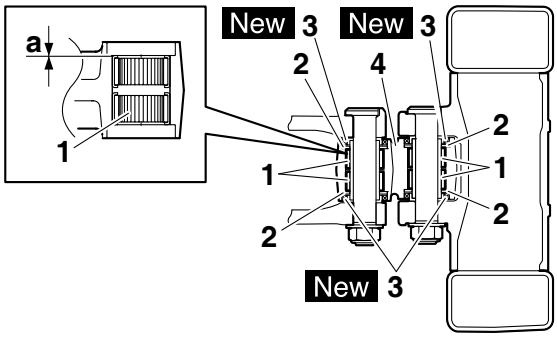

3. Install:
   - Bearing “1”
   - Oil seals “2” New
     (to connecting arm “3”)

	**Installed depth “a”** **0 mm (0 in)**

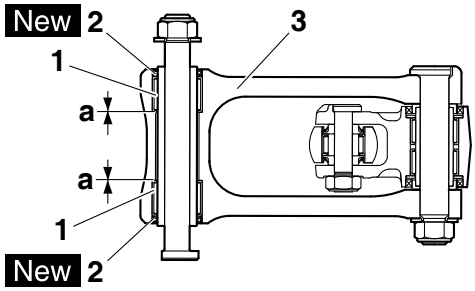

INSTALLING THE REAR SHOCK ABSORBER ASSEMBLY

1. Lubricate:
   - Bearing (lower side)
   - Dust seal
   - Collars
   - Bushing

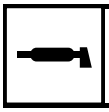	**Recommended lubricant** **Molybdenum disulfide grease**

NOTICE

Do not apply the grease to the bearing outer race because it will wear the rear shock absorber surface on which the bearing is press fitted.

2. Lubricate:
   - O-ring

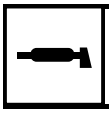	**Recommended lubricant** **Lithium-soap-based grease**

3. Install:
   - Bearing
   - Stopper ring New
     (to rear shock absorber assembly (upper side))

TIP

- Install the bearing parallel until the stopper ring groove appears by pressing its outer race.
- After installing the stopper ring, push back the bearing unit it contacts the stopper ring.

4. Install:
   - Bearing “1”
   - Bushing “2”
   - Collar “3”
   - Dust seal “4”
     (to rear shock absorber assembly (lower side))

TIP

Install the dust seals with their lips facing inward.

	**Installed depth “a”** **4.25 mm (0.17 in)**

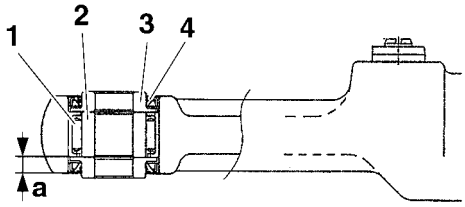

5. Lubricate:
   - Connecting arm and frame bolt
   - Relay arm and connecting arm bolt
   - Relay arm and swingarm bolt
     (circumference and threaded portion)
   - Rear shock absorber assembly upper bolt
   - Rear shock absorber assembly lower bolt

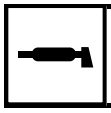	**Recommended lubricant** **Molybdenum disulfide grease**

6. Install:
   - Rear shock absorber assembly

TIP

- When installing the rear shock absorber assembly, lift up the swingarm.
- Install the rear shock absorber assembly upper bolt, and connecting arm bolt (frame side) from the right.
- Install the rear shock absorber assembly lower bolts, connecting arm bolt (relay arm side), and relay arm bolt (swingarm side) from the left.

7. Tighten:
   - Rear shock absorber assembly upper bolt

	**Rear shock absorber assembly upper bolt** **56 Nm (5.6 m·kgf, 41 ft·lbf)**

• Connecting arm bolt (frame side)

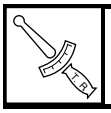	**Connecting arm bolt (frame side)** **80 Nm (8.0 m·kgf, 58 ft·lbf)**

• Connecting arm bolt (relay arm side)

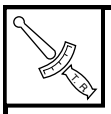	**Connecting arm bolt (relay arm side)** **80 Nm (8.0 m·kgf, 58 ft·lbf)**

• Relay arm bolt (swingarm side)

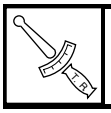	**Relay arm bolt (swingarm side)** **70 Nm (7.0 m·kgf, 51 ft·lbf)**

• Rear shock absorber assembly lower bolt

	**Rear shock absorber assembly lower bolt** **53 Nm (5.3 m·kgf, 38 ft·lbf)**

SWINGARM

Removing the swingarm

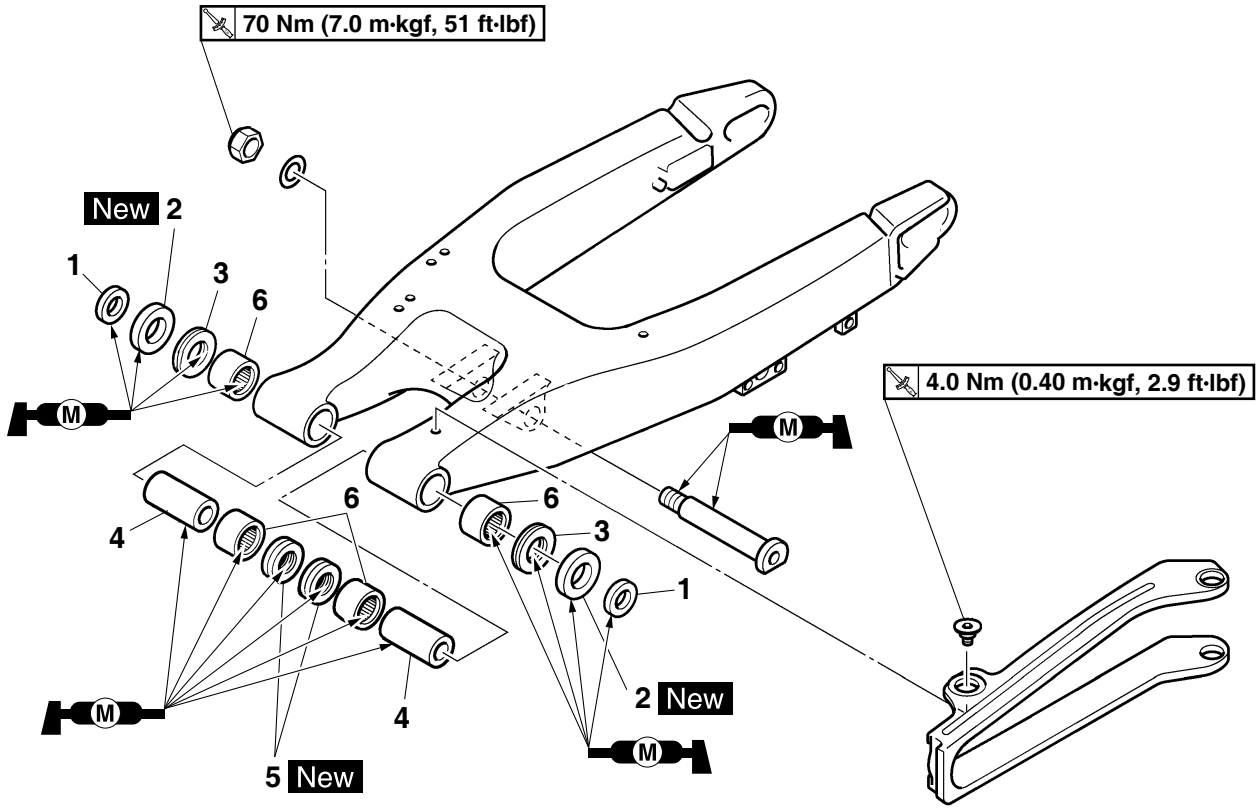

Order	Part name	Q'ty	Remarks
			Use a suitable stand to raise the front wheel off the ground.
	Brake hose holder		Refer to "REAR BRAKE" on page 5-23.
	Rear brake caliper		Refer to "REAR BRAKE" on page 5-23.
	Bolt (brake pedal)		
	Drive chain		
1	Collars	2	
2	Oil seals	2	
3	Thrust bearing	2	
4	Bushing	2	
5	Oil seals	2	
6	Bearing	4	
			For installation, reverse the removal procedure.

REMOVING THE SWINGARM

1. Use a suitable stand to raise the rear wheel off the ground.

WARNING

Securely support the vehicle so that there is no danger of it falling over.

2. Measure:
   - Swingarm side play
   - Swingarm vertical movement

▼▼▼▼▼▼▼▼▼▼▼▼▼▼▼▼▼▼▼▼▼▼▼▼▼▼▼▼▼▼▼▼▼▼▼▼▼▼

a. Measure the tightening torque of the pivot shaft nut.

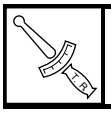	**Pivot shaft nut** **85 Nm (8.5 m·kgf, 61 ft·lbf)**

b. Measure the swingarm side play “a” by moving the swingarm from side to side.
c. If the swingarm side play is out of specification, check the spacers, the bearings, and the collars.
d. Check the swingarm vertical movement “b” by moving the swingarm up and down.
   If swingarm vertical movement is not smooth or if there is binding, check the spacers, the bearings, and the collars.

	**Swingarm end free play limit (radial)** **1.0 mm (0.04 in)**

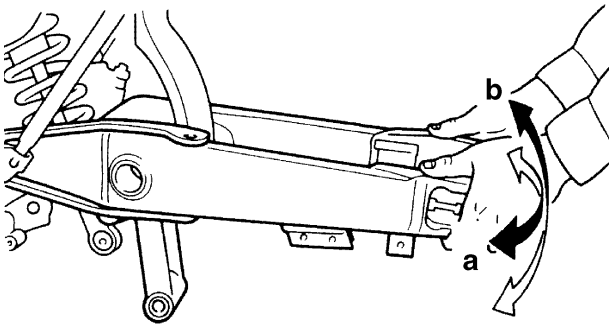

▲▲▲▲▲▲▲▲▲▲▲▲▲▲▲▲▲▲▲▲▲▲▲▲▲▲▲▲▲▲▲▲▲▲▲▲▲▲

REMOVING THE BEARING

1. Remove:
   - Bearing “1”

TIP

Remove the bearing by pressing its outer race.

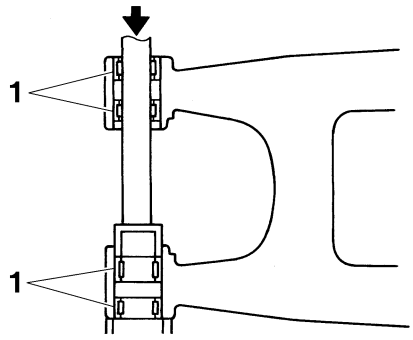

CHECKING THE SWINGARM

1. Check:
   - Swingarm
     Bends/cracks/damage → Replace.
2. Check:
   - Pivot shaft
     Roll the pivot shaft on a flat surface.
     Bends → Replace.

WARNING

Do not attempt to straighten a bent pivot shaft.

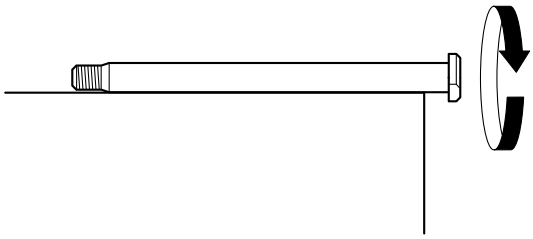

3. Wash with kerosene:
   - Pivot shaft
   - Spacers
   - Collars
   - Bearing
4. Check:
   - Oil seals
     Damage → Replace.
   - Bearing
   - Spacers
     Free play exists/unsmooth revolution/rust → Replace bearing and bushing as a set.

INSTALLING THE SWINGARM

1. Lubricate:
   - Bearing
   - Collars
   - Spacers
   - Oil seal New
   - Pivot shaft

	Recommended lubricant **Molybdenum disulfide grease**

2. Install:
   - Bearing "1"
   - Oil seals "2" New
     (to the swingarm)

	Installed depth "a" **0–0.5 mm (0–0.02 in)** **Installed depth "b"** **6.5 mm (0.26 in)**

TIP

First install the outer and then the inner bearings to a specified depth from inside.

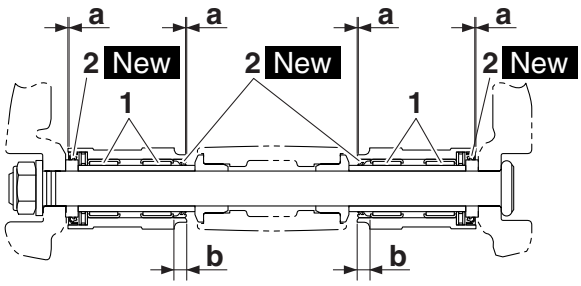

3. Install:
   - Swingarm

	Pivot shaft nut **85 Nm (8.5 m·kgf, 61 ft·lbf)**

TIP

Install the pivot shaft from the right.

4. Install:
   - Rear wheel
     Refer to "REAR WHEEL" on page 5-9.
5. Adjust:
   - Drive chain slack
     Refer to "ADJUSTING THE DRIVE CHAIN SLACK" on page 3-30.

	Drive chain slack **50–60 mm (1.97–2.36 in)**

CHAIN DRIVE

Removing the drive chain

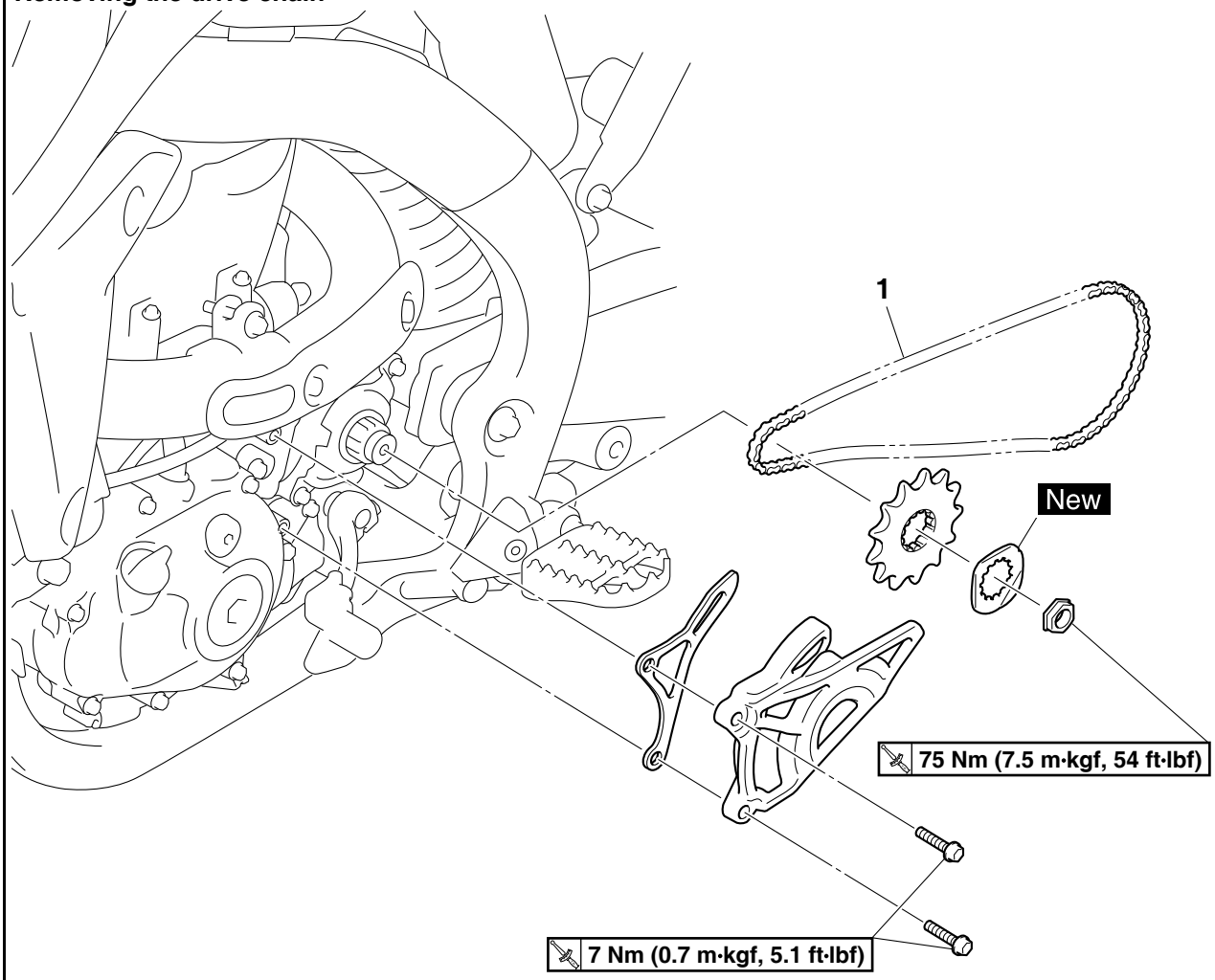

Job Order	Part name	Q'ty	Servicing Information
	Drive sprocket		Refer to "ENGINE REMOVAL" on page 6-1.
1	Drive chain	1	
			For installation, reverse the removal procedure.

REMOVING THE DRIVE CHAIN

1. Stand the vehicle on a level surface.

WARNING

Securely support the vehicle so that there is no danger of it falling over.

TIP

Place the vehicle on a suitable stand so that the rear wheel is elevated.

2. Remove:
   - Drive chain

TIP

Cut the drive chain with the drive chain cut & rivet tool. (Use goods on the market)

CHECKING THE DRIVE CHAIN

1. Measure:
   - 15-link section of the drive chain
     Out of specification → Replace the drive chain.

	**15-link length limit** **239.3 mm (9.42 in)**

▼▼▼▼▼▼▼▼▼▼▼▼▼▼▼▼▼▼▼▼▼▼▼▼▼▼▼▼▼▼▼▼▼▼

a. Measure the length “a” between the inner sides of the pins and the length “b” between the outer sides of the pins on a 15-link section of the drive chain as shown in the illustration.

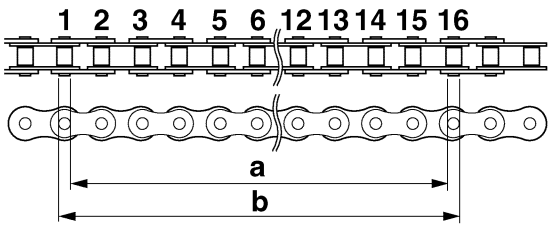

b. Calculate the length “c” of the 15-link section of the drive chain using the following formula.
   Drive chain 15-link section length “c” = (length “a” between pin inner sides + length “b” between pin outer sides)/2

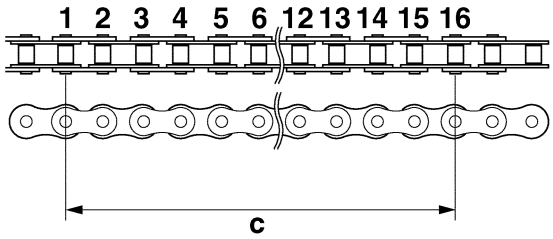

TIP

- When measuring a 15-link section of the drive chain, make sure that the drive chain is taut.
- Perform this procedure 2–3 times, at a different location each time.

▲▲▲▲▲▲▲▲▲▲▲▲▲▲▲▲▲▲▲▲▲▲▲▲▲▲▲▲▲▲▲▲▲▲

2. Check:
   - Drive chain
     Stiffness → Clean, lubricate, or replace.

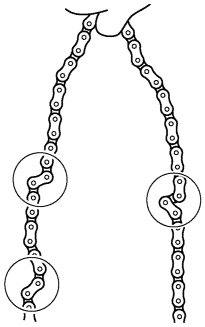

3. Clean:
   - Drive chain

▼▼▼▼▼▼▼▼▼▼▼▼▼▼▼▼▼▼▼▼▼▼▼▼▼▼▼▼▼▼▼▼▼▼

a. Wipe the drive chain with a clean cloth.
b. Put the drive chain in kerosene and remove any remaining dirt.
c. Remove the drive chain from the kerosene and completely dry it.

NOTICE

- **This vehicle has a drive chain with small rubber O-rings “1” between the drive chain side plates. Never use high-pressure water or air, steam, gasoline, certain solvents (e.g., benzine), or a coarse brush to clean the drive chain. High-pressure methods could force dirt or water into the drive chain’s internals, and solvents will deteriorate the O-rings. A coarse brush can also damage the O-rings. Therefore, use only kerosene to clean the drive chain.**
- **Do not soak the drive chain in kerosene for more than ten minutes, otherwise the O-rings can be damaged.**

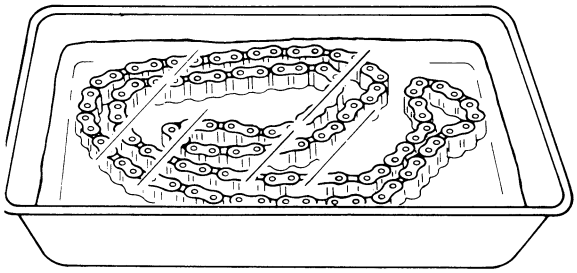

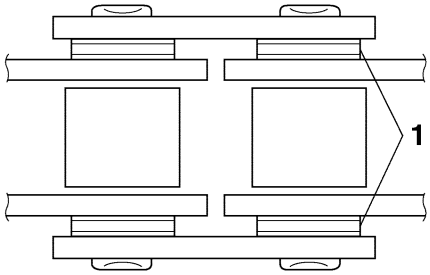

▲▲▲▲▲▲▲▲▲▲▲▲▲▲▲▲▲▲▲▲▲▲▲▲▲▲▲▲▲▲▲▲▲▲

4. Check:
   - O-rings “1”
     Damage → Replace the drive chain.
   - Drive chain rollers “2”
     Damage/wear → Replace the drive chain.
   - Drive chain side plates “3”
     Damage/wear → Replace the drive chain.

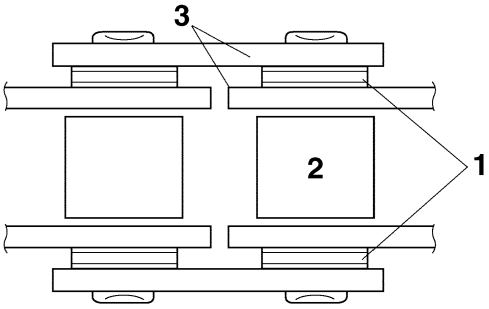

5. Lubricate:
   - Drive chain

	Recommended lubricant **Chain lubricant suitable for O-ring chains**

CHECKING THE DRIVE SPROCKET

1. Check:
   - Drive sprocket
     More than 1/4 tooth wear “a” → Replace the drive sprocket and the rear wheel sprocket as a set.
     Bent tooth → Replace the drive sprocket and the rear wheel sprocket as a set.

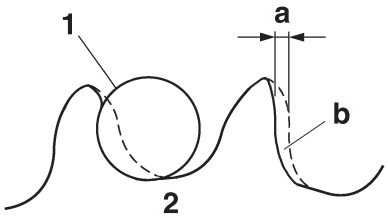

b. Correct

1. Drive chain roller
2. Drive sprocket

CHECKING THE REAR WHEEL SPROCKET

Refer to “CHECKING AND REPLACING THE REAR WHEEL SPROCKET” on page 5-10.

INSTALLING THE DRIVE CHAIN

1. Install:
   - Drive chain

NOTICE

Be sure to put on safety goggles when working.

TIP

Install the drive chain joint with the drive chain cut & rivet tool. (Use goods on the market)

▼▼▼▼▼▼▼▼▼▼▼▼▼▼▼▼▼▼▼▼▼▼▼▼▼▼▼▼▼▼▼▼▼▼

a. When press fitting the connecting plate “1”, make sure the space “a” between the end of the connecting pin “2” and the connecting plate is 1.2–1.4 mm (0.05–0.06 in).

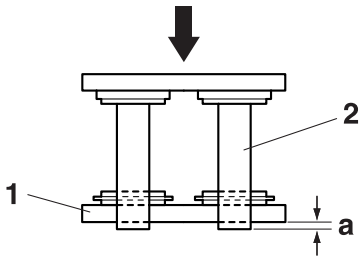

b. After riveting, make sure the diameter between the edges “b” of the connecting pin “2” is 5.5–5.8 mm (0.22–0.23 in).

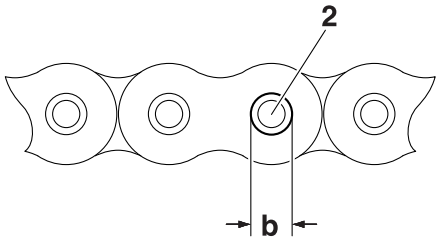

c. After riveting, make sure the space “c”, which is inside of the connecting link “3” and inside of the connecting plate “1”, is 14.1–14.3 mm (0.56–0.65 in).

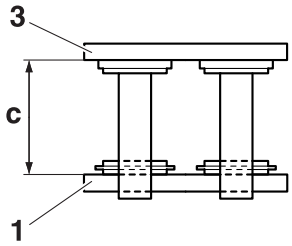

▲▲▲▲▲▲▲▲▲▲▲▲▲▲▲▲▲▲▲▲▲▲▲▲▲▲▲▲▲▲▲▲▲▲

2. Lubricate:
   - Drive chain

	Recommended lubricant **Chain lubricant suitable for O-ring chains**

3. Install:
   - Drive sprocket
   - Lock washer New
   - Drive sprocket nut

   Refer to “ENGINE REMOVAL” on page 6-1.

	Drive sprocket nut **75 Nm (7.5 m·kgf, 54 ft·lbf)**

NOTICE

Never install a new drive chain onto worn drive chain sprockets; this will dramatically shorten the drive chain’s life.

4. Adjust:
   - Drive chain slack

   Refer to “ADJUSTING THE DRIVE CHAIN SLACK” on page 3-30.

	Drive chain slack **50–60 mm (1.97–2.36 in)**

NOTICE

A drive chain that is too tight will overload the engine and other vital parts, and one that is too loose can skip and damage the swingarm or cause an accident. Therefore, keep the drive chain slack within the specified limits.

ENGINE

TIP

This section is intended for those who have basic knowledge and skill concerning the servicing of Yamaha motorcycles (e.g., Yamaha dealers, service engineers, etc.). Those who have little knowledge and skill concerning servicing are requested not to undertake inspection, adjustment, disassembly, or reassembly only by reference to this manual. It may lead to servicing trouble and mechanical damage.

ENGINE REMOVAL

Removing the exhaust pipe

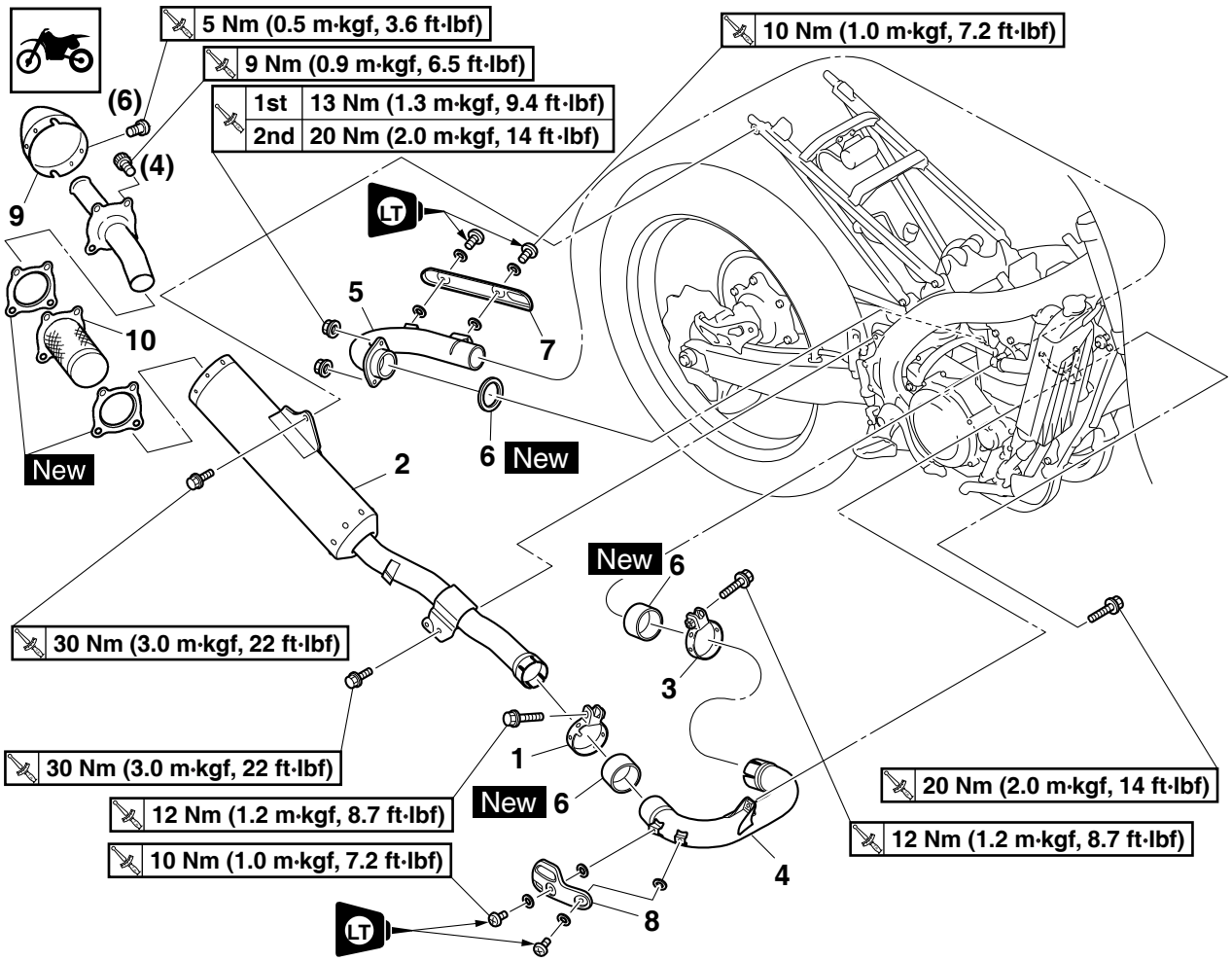

Order	Part name	Q'ty	Remarks
	Side cover (right)		Refer to "GENERAL CHASSIS" on page 5-1.
	Rear shock absorber assembly lower bolt		Refer to "REAR SHOCK ABSORBER ASSEMBLY" on page 5-57.
	Connecting arm bolt (frame side)		Refer to "REAR SHOCK ABSORBER ASSEMBLY" on page 5-57.
1	Silencer clamp	1	Loosen.
2	Silencer	1	
3	Exhaust pipe 2 clamp	1	Loosen.
4	Exhaust pipe 2	1	
5	Exhaust pipe 1	1	

Removing the exhaust pipe

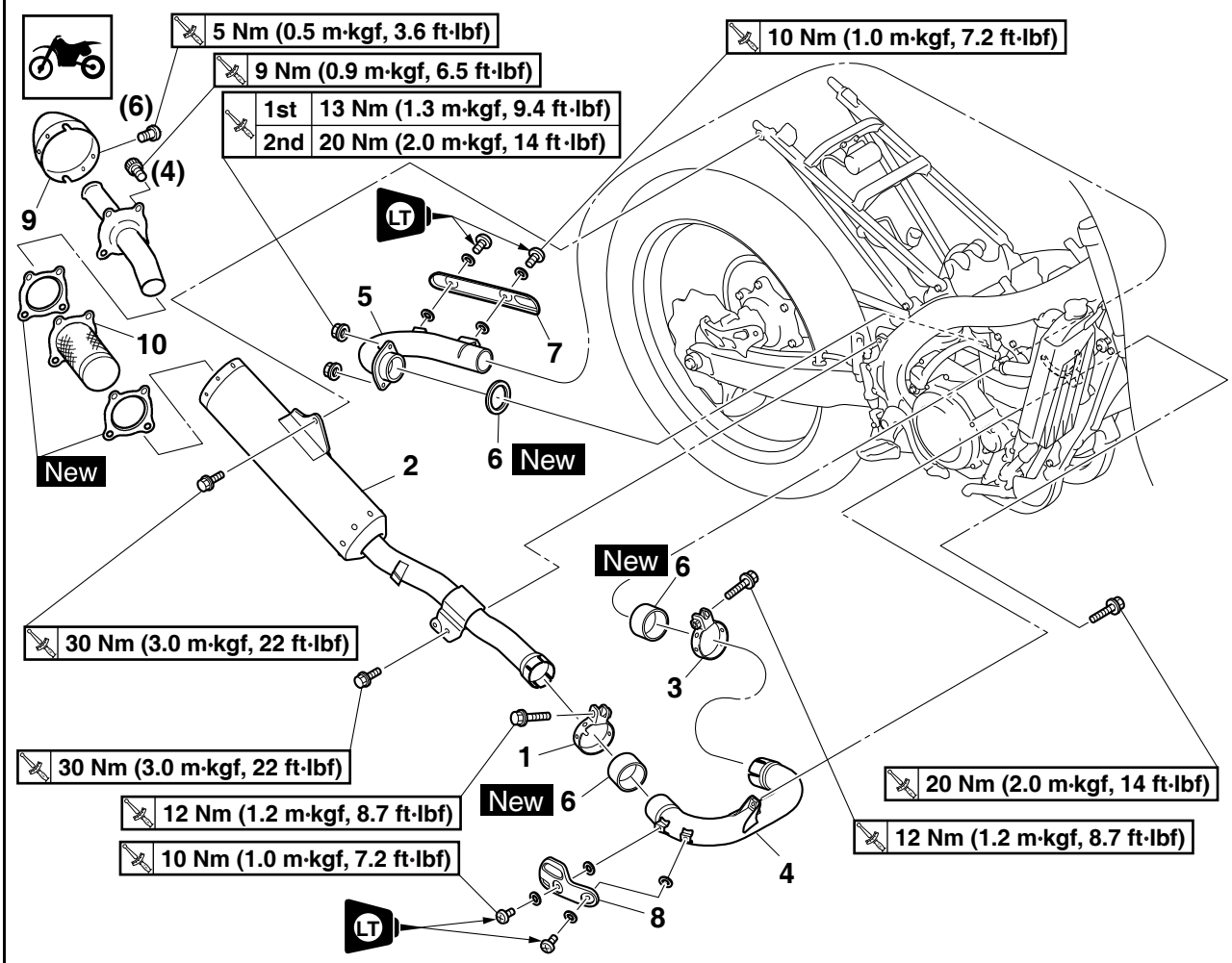

Order	Part name	Q'ty	Remarks
6	Gaskets	3	
7	Exhaust pipe 1 protector	1	
8	Exhaust pipe 2 protector	1	
9	Silencer cap	1	
10	Spark arrester	1	
			For installation, reverse the removal procedure.

Removing the electronic parts

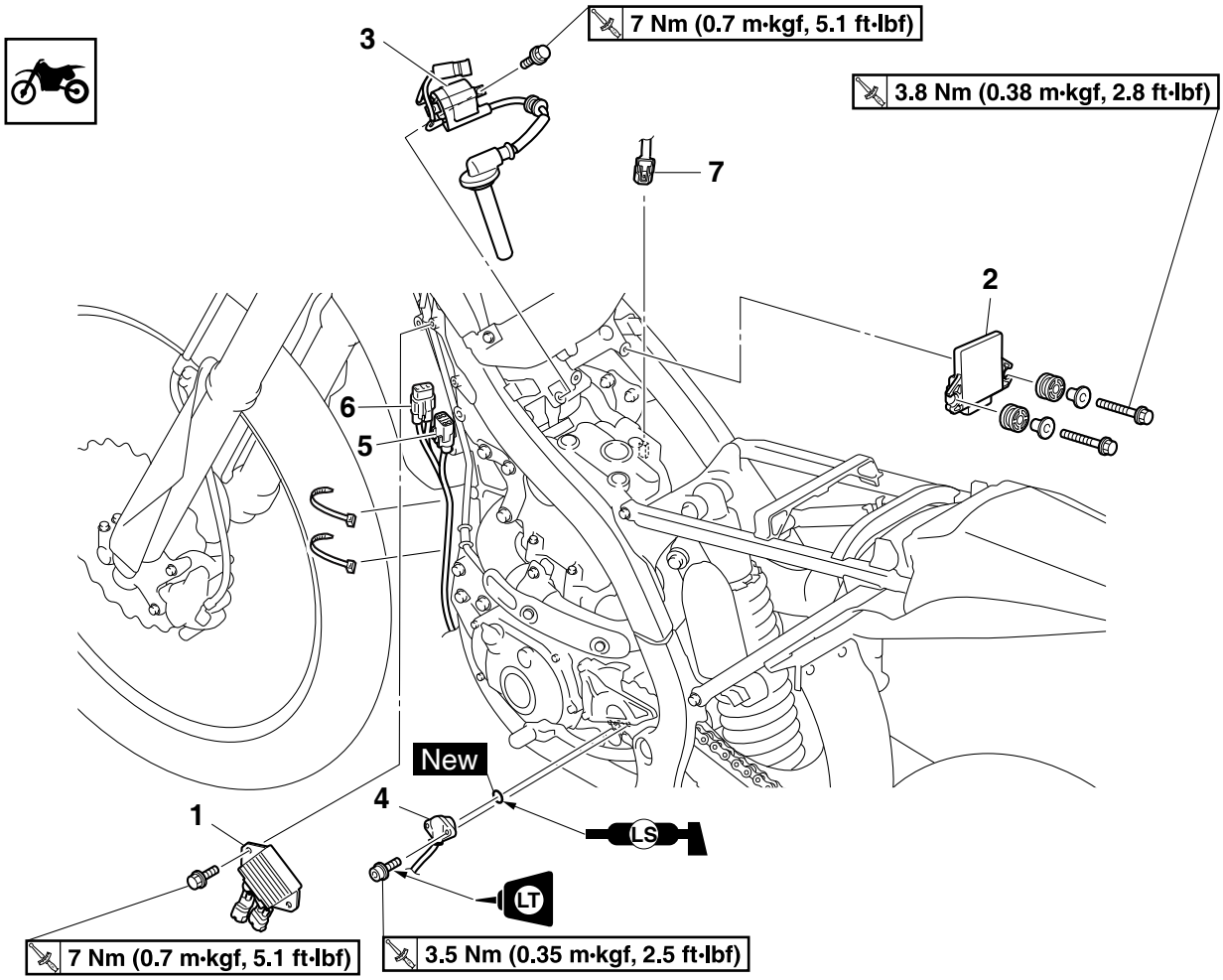

Order	Part name	Q'ty	Remarks
			Use a suitable stand to raise the front wheel off the ground.
	Seat		Refer to "GENERAL CHASSIS" on page 5-1.
	Side cover (left/right)		Refer to "GENERAL CHASSIS" on page 5-1.
	Air scoop (left / right)		Refer to "GENERAL CHASSIS" on page 5-1.
	Fuel tank		Refer to "FUEL TANK" on page 8-1.
	Air filter case cover		
1	Rectifier/regulator	1	
2	ECU	1	
3	Ignition coil	1	
4	Neutral switch	1	
5	AC magneto coupler	1	Disconnect.
6	Crankshaft position sensor coupler	1	Disconnect.
7	Coolant temperature sensor coupler	1	Disconnect.
			For installation, reverse the removal procedure.

Removing the engine

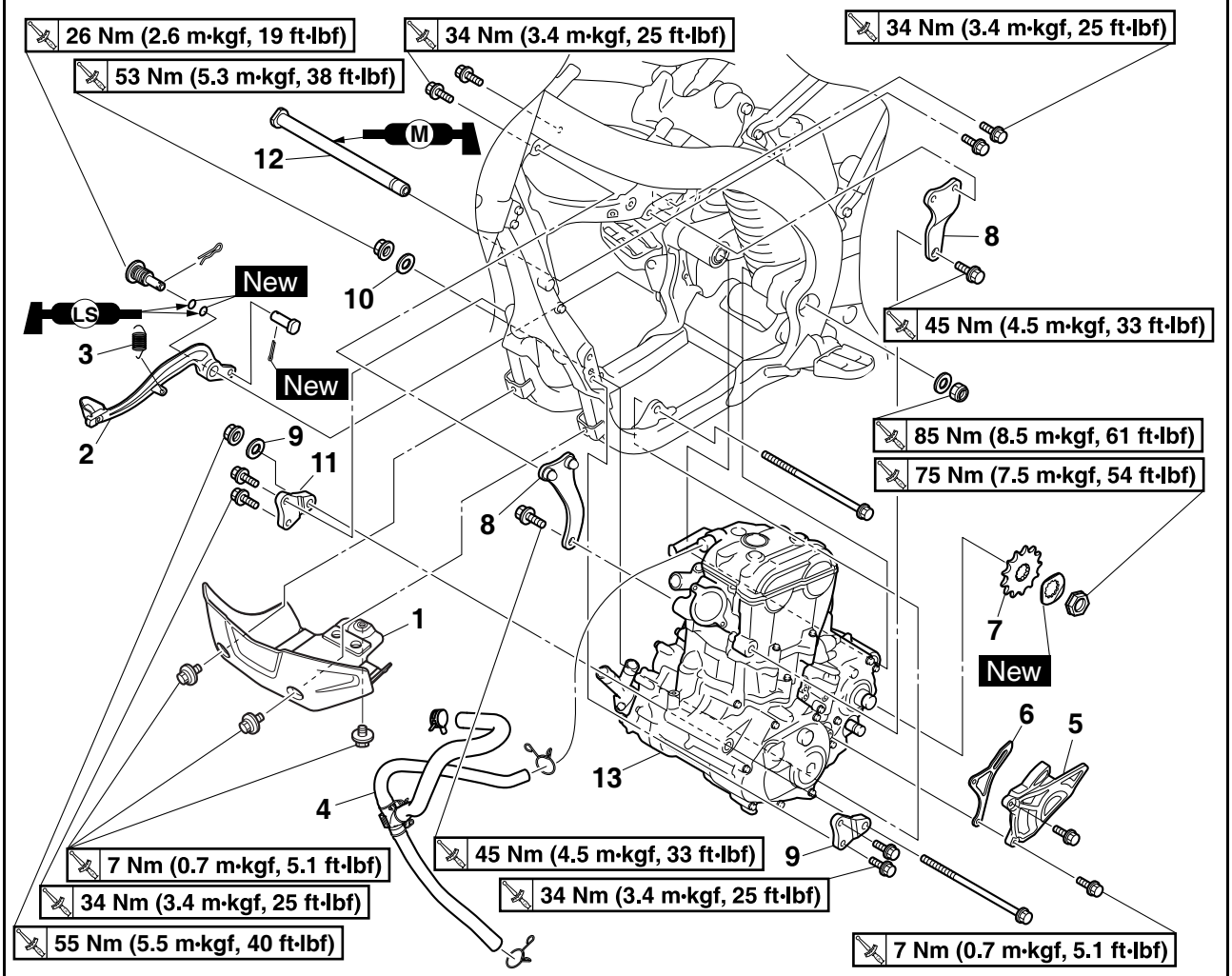

Order	Part name	Q'ty	Remarks
			Use a suitable stand to raise the front wheel off the ground.
	Seat		Refer to "GENERAL CHASSIS" on page 5-1.
	Side cover (left/right)		Refer to "GENERAL CHASSIS" on page 5-1.
	Air scoop (left / right)		Refer to "GENERAL CHASSIS" on page 5-1.
	Fuel tank		Refer to "FUEL TANK" on page 8-1.
	Exhaust pipe and silencer		Refer to "ENGINE REMOVAL" on page 6-1.
	Air filter case		Refer to "THROTTLE BODY" on page 8-7.
	Throttle body		Refer to "THROTTLE BODY" on page 8-7.
	Clutch cable		Refer to "CLUTCH" on page 6-40.
	Shift pedal		Refer to "SHIFT SHAFT" on page 6-52.
	Starter motor	1	Refer to "ELECTRIC STARTER" on page 6-35.
1	Engine guard	1	
2	Brake pedal	1	
3	Spring	1	

Removing the engine

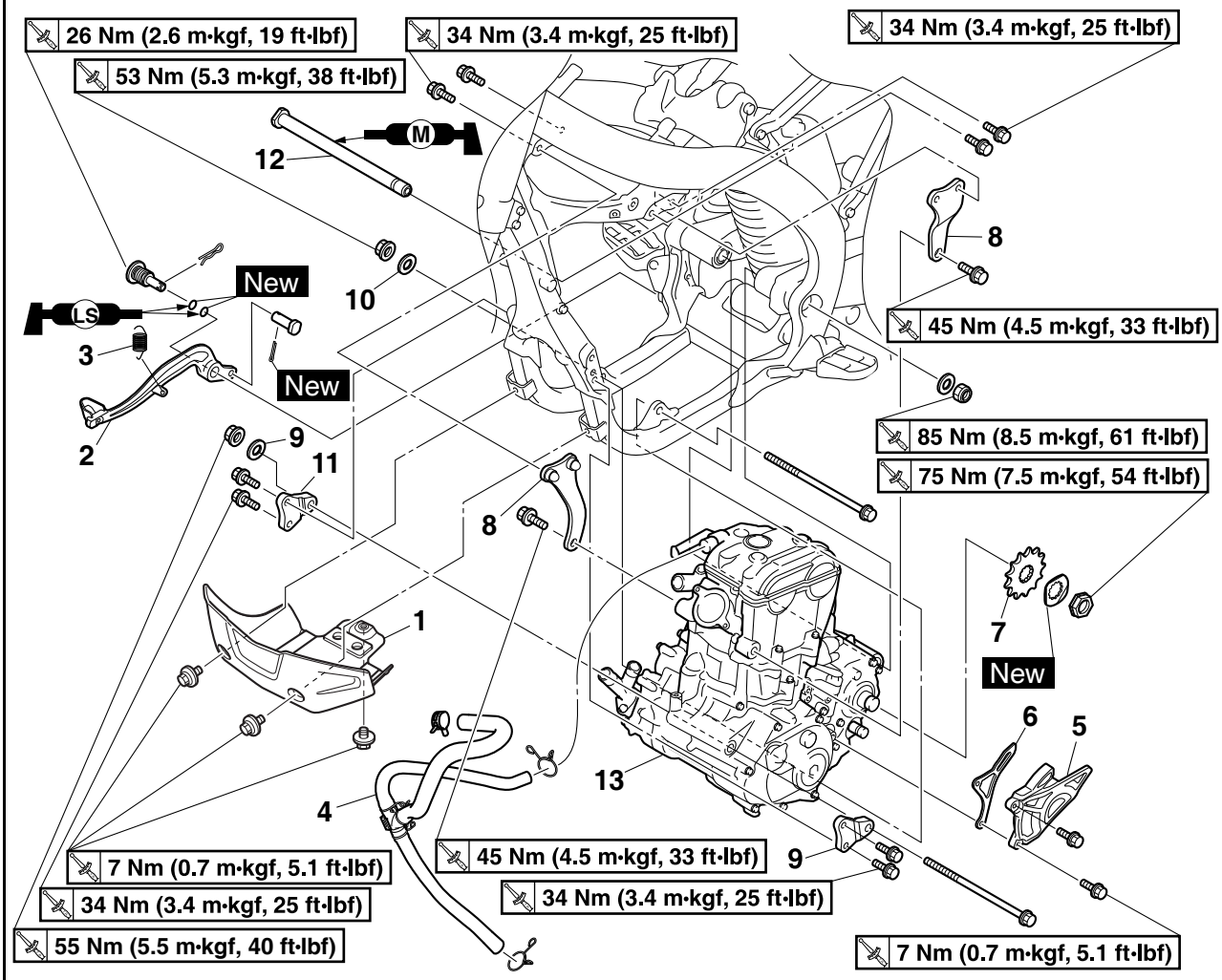

Order	Part name	Q'ty	Remarks
4	Cylinder head breather hose	1	
5	Drive sprocket cover	1	
6	Drive chain guide	1	
7	Drive sprocket	1	
8	Upper engine bracket	2	
9	Washer	1	Thickness:2.3 mm (0.09 in)
10	Washer	1	Thickness:1.0 mm (0.04 in)
11	Lower engine bracket	2	
12	Pivot shaft	1	
13	Engine	1	
			For installation, reverse the removal procedure.

REMOVING THE SILENCER

1. Remove:
   - Rear shock absorber assembly lower bolt "1"
   - Connecting arm bolt (frame side) "2"
   - Silencer "3"

TIP

Move the rear shock absorber to the left side of the chassis, and remove the silencer.

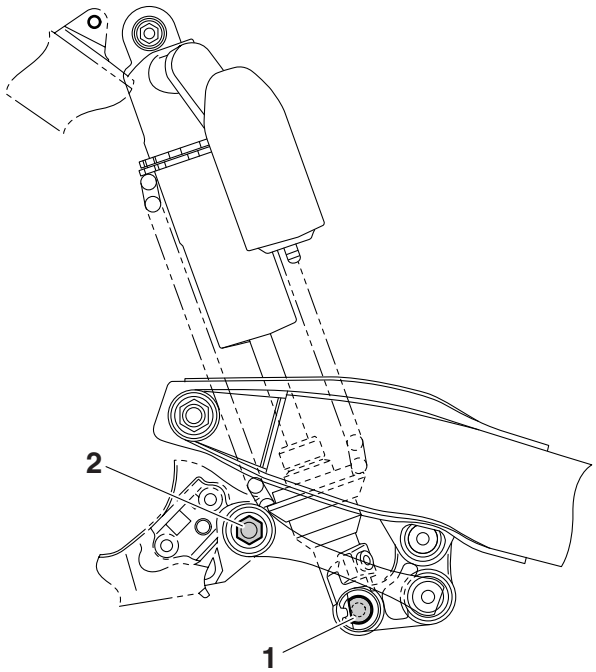

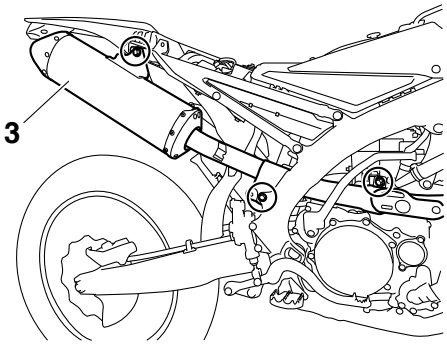

REMOVING THE EXHAUST PIPE 2

1. Remove:
   - Exhaust pipe 2

TIP

Put the Exhaust pipe 2 into the state as shown by moving this, and then remove it.

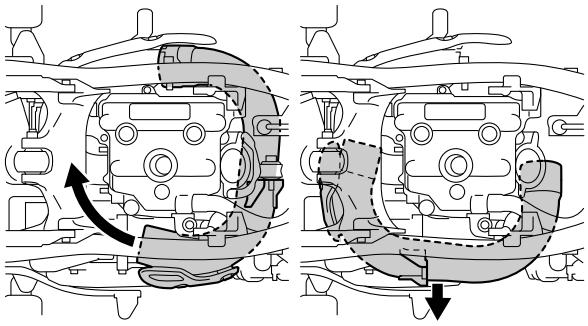

REMOVING THE DRIVE SPROCKET

1. Straighten the lock washer tab.
2. Remove:
   - Nut (drive sprocket) "1"
   - Lock washer "2"

TIP

Loosen the nut while applying the rear brake.

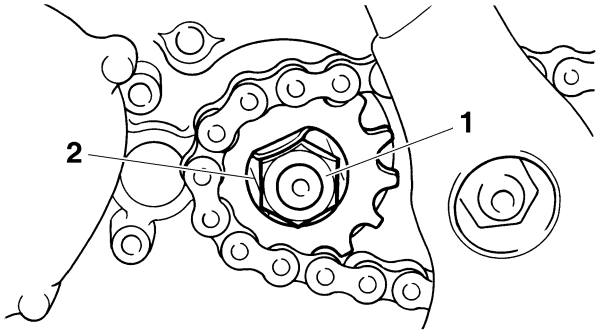

3. Remove:
   - Drive sprocket "1"
   - Drive chain "2"

TIP

Remove the drive sprocket together with the drive chain.

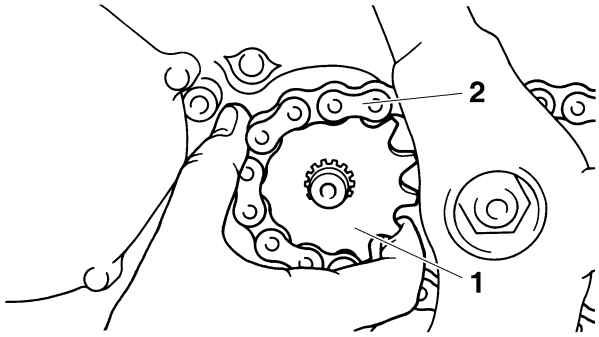

REMOVING THE ENGINE

1. Remove:
   - Pivot shaft “1”

TIP

If the pivot shaft is pulled all the way out, the swingarm will come loose. If possible, insert a shaft of similar diameter into the other side of the swingarm to support it.

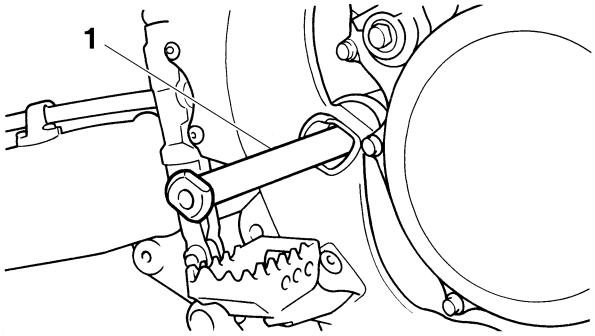

2. Remove:
   - Engine “1”
     From the right side.

TIP

- Make sure that the couplers, the hoses, and the cables are disconnected.
- Lift up the engine, and remove this from its lower part toward the right of the chassis.

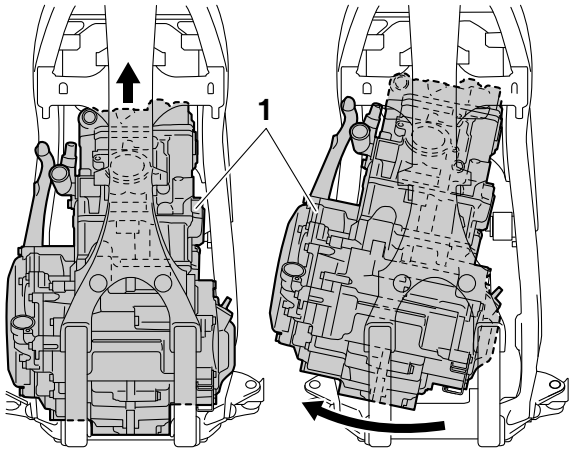

CLEANING THE SPARK ARRESTER

WARNING

- **Be sure the exhaust pipe and muffler are cool before cleaning the spark arrester.**
- **Do not start the engine when cleaning the exhaust system.**

1. Remove:
   - Muffler cap screws “1”

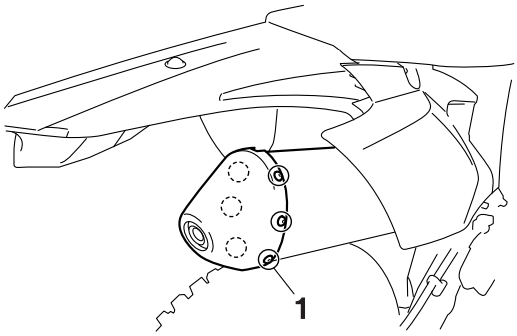

2. Remove:
   - Spark arrester bolts “1”

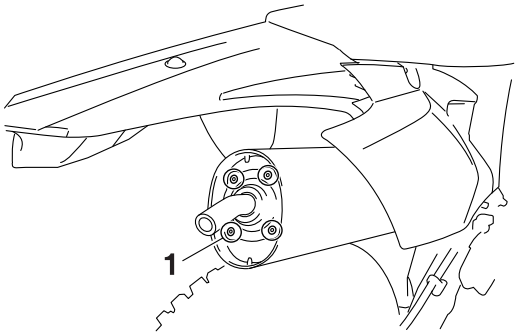

3. Remove:
   - Tail pipe “1”
   - Tail pipe gasket “2”
   - Spark arrester “3”
     Pull the spark arrester out of the muffler.
   - Spark arrester gasket “4”

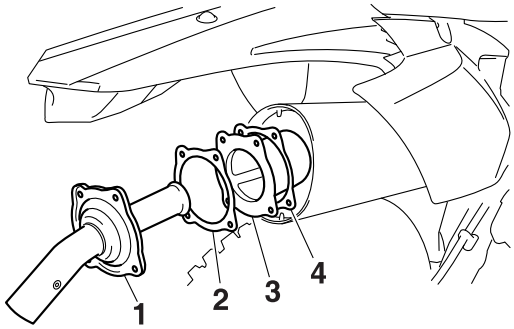

4. Clean:
   - Spark arrester
     Tap the spark arrester lightly, then use a wire brush to remove any carbon deposits.

5. Install:
   - Spark arrester gasket New
   - Spark arrester
     Insert the spark arrester into the muffler and align the bolt holes.
   - Tail pipe gasket New
   - Spark arrester bolts

	Spark arrester bolt **9 Nm (0.9 m·kgf, 6.5 ft·lbf)**

6. Install:
   - Muffler cap

	Muffler cap screw **5 Nm (0.5 m·kgf, 3.6 ft·lbf)**

TIP

First tighten the two screws "a" located horizontally apart, and then tighten the others.

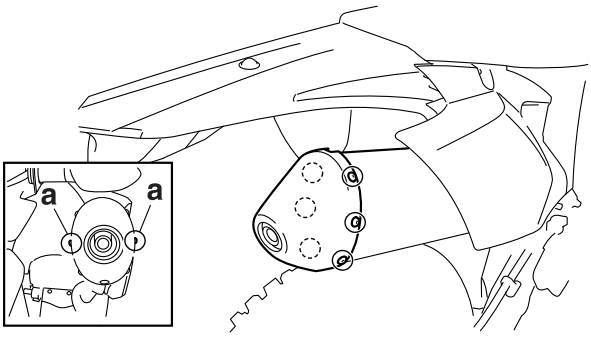

CHECKING THE SILENCER AND EXHAUST PIPE

1. Check:
   - Gasket "1"
     Damage → Replace.

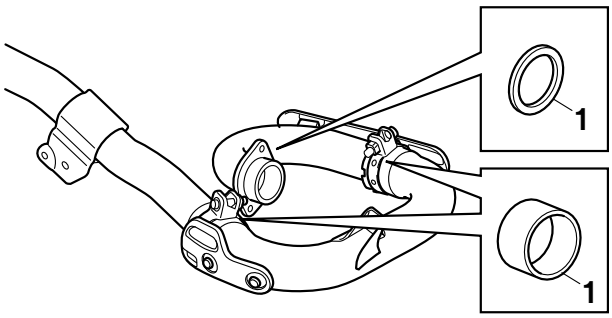

INSTALLING THE ENGINE

1. Install:
   - Engine "1"
     Install the engine from the right side.
   - Pivot shaft "2"

	Pivot shaft **85 Nm (8.5 m·kgf, 61 ft·lbf)**

   - Engine mounting bolt (lower side) "3"

	Engine mounting bolt (lower side) **53 Nm (5.3 m·kgf, 38 ft·lbf)**

   - Front engine bracket "4"
   - Engine bracket bolt (front side) "5"

	Engine bracket bolt (front side) **34 Nm (3.4 m·kgf, 25 ft·lbf)**

   - Engine mounting bolt (front side) "6"

	Engine mounting bolt (front side) **55 Nm (5.5 m·kgf, 40 ft·lbf)**

   - Upper engine bracket "7"
   - Engine bracket bolt (upper side) "8"

	Engine bracket bolt (upper side) **34 Nm (3.4 m·kgf, 25 ft·lbf)**

   - Engine mounting bolt (upper side) "9"

	Engine mounting bolt (upper side) **45 Nm (4.5 m·kgf, 33 ft·lbf)**

TIP

Apply molybdenum disulfide grease to the pivot shaft.

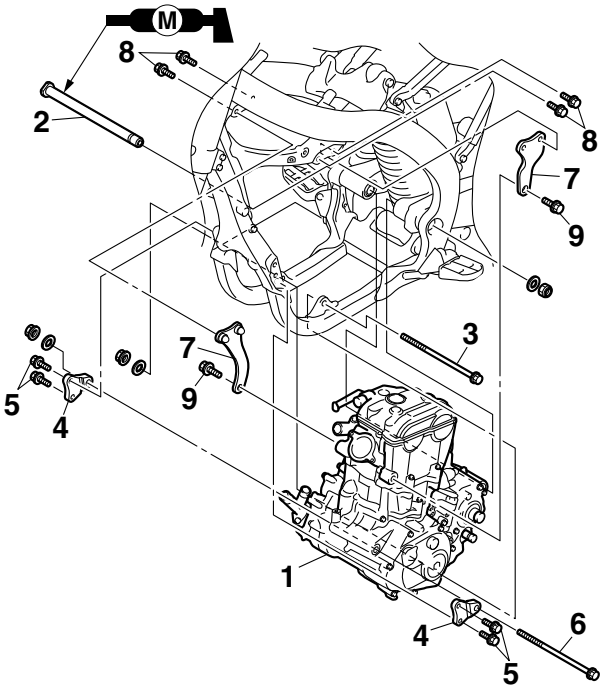

INSTALLING THE BRAKE PEDAL

1. Install:
   - Spring “1”
   - Brake pedal “2”
   - O-rings “3” New
   - Bolt (brake pedal) “4”

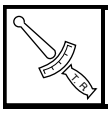	**Bolt (brake pedal)** **26 Nm (2.6 m·kgf, 19 ft·lbf)**

   - Clip “5”

TIP

Apply the lithium-soap-based grease on the bolt, O-rings and brake pedal bracket.

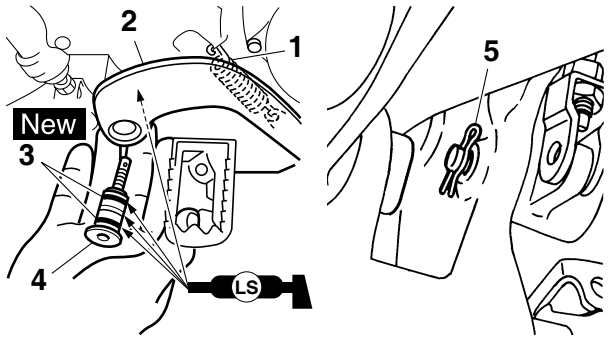

INSTALLING THE DRIVE SPROCKET

1. Install:
   - Drive sprocket “1”
   - Drive chain “2”

TIP

Install the drive sprocket together with the drive chain.

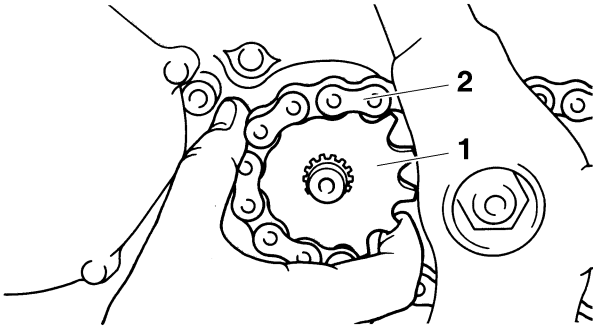

2. Install:
   - Lock washer “1” New
   - Nut (drive sprocket) “2”

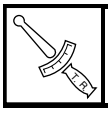	**Nut (drive sprocket)** **75 Nm (7.5 m·kgf, 54 ft·lbf)**

TIP

Tighten the nut while applying the rear brake.

NOTICE

Make sure to tighten to specification; otherwise, it may damage the other part that is fastened together.

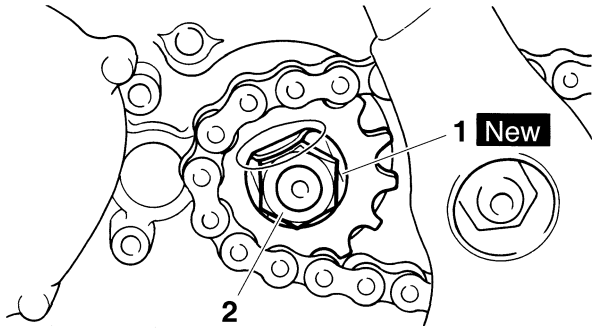

3. Bend the lock washer tab to lock the nut.
4. Install:
   - Drive sprocket guide
   - Drive sprocket cover “1”
   - Bolt (drive sprocket cover) “2”

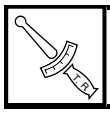	**Bolt (drive sprocket cover)** **7 Nm (0.7 m·kgf, 5.1 ft·lbf)**

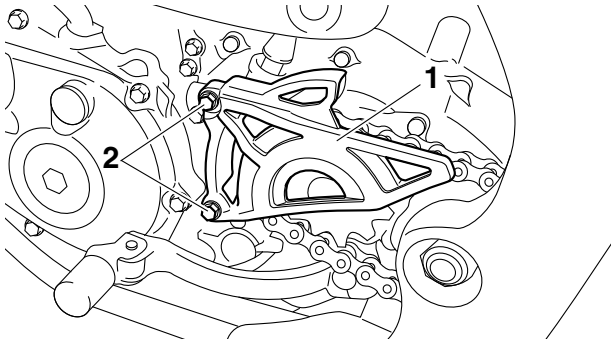

INSTALLING THE EXHAUST PIPE AND MUFFLER

1. Install:
   - Gasket New
   - Exhaust pipe 1 “1”
   - Nut (exhaust pipe 1) “2”

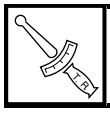	**Nut (exhaust pipe)** **20 Nm (2.0 m·kgf, 14 ft·lbf)**

TIP

First temporarily tighten nuts to 13 Nm (1.3 m·kgf, 9.4 ft·lbf). Then retighten them to 20 Nm (2.0 m·kgf, 14 ft·lbf).

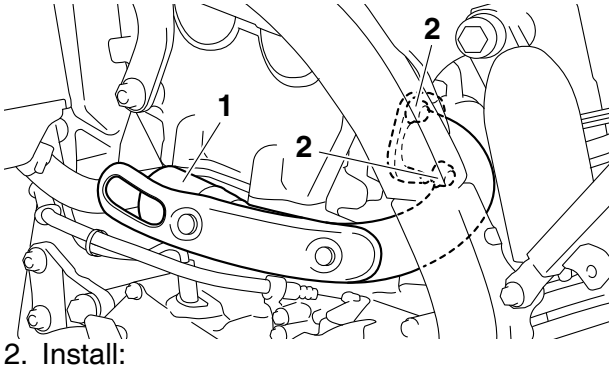

2. Install:
   - Clamp
   - Exhaust pipe 2 “1”
   - Bolt (exhaust pipe 2) “2”

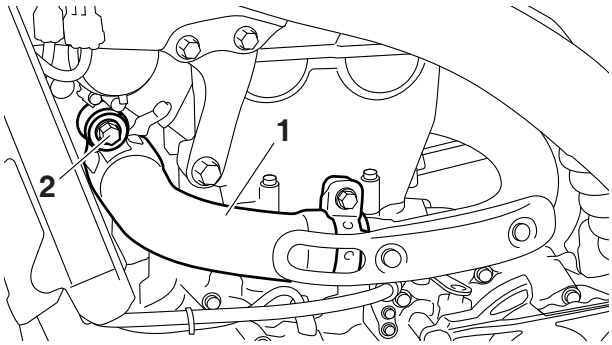

TIP

Install and temporarily tighten the exhaust pipe 2 with its end positioned as shown with respect to the exhaust pipe 1.

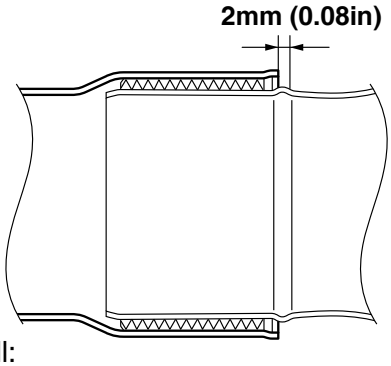

3. Install:
   - Clamp
   - Silencer “1”
   - Bolt (silencer) “2”

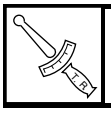	**Bolt (silencer)** **30 Nm (3.0 m·kgf, 22 ft·lbf)**

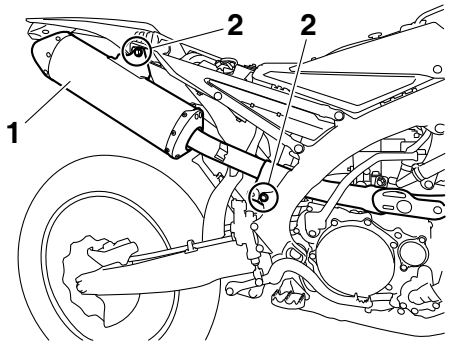

TIP

Install and temporarily tighten the silencer so that its joint is positioned as shown with respect to the exhaust pipe 2.

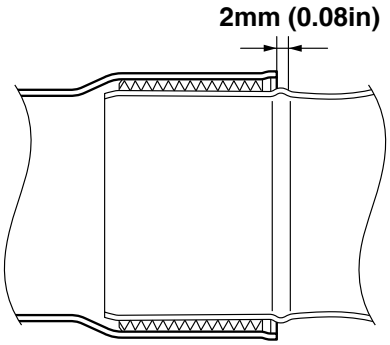

4. Tighten:
   - Bolt (exhaust pipe 2)

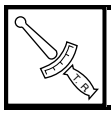	**Bolt (exhaust pipe 2)** **20 Nm (2.0 m·kgf, 14 ft·lbf)**

   - Clamp

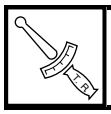	**Clamp** **12 Nm (1.2 m·kgf, 8.7 ft·lbf)**

TIP

Tighten while checking that their front and rear joints are inserted in position.

CAMSHAFT

Removing the cylinder head cover

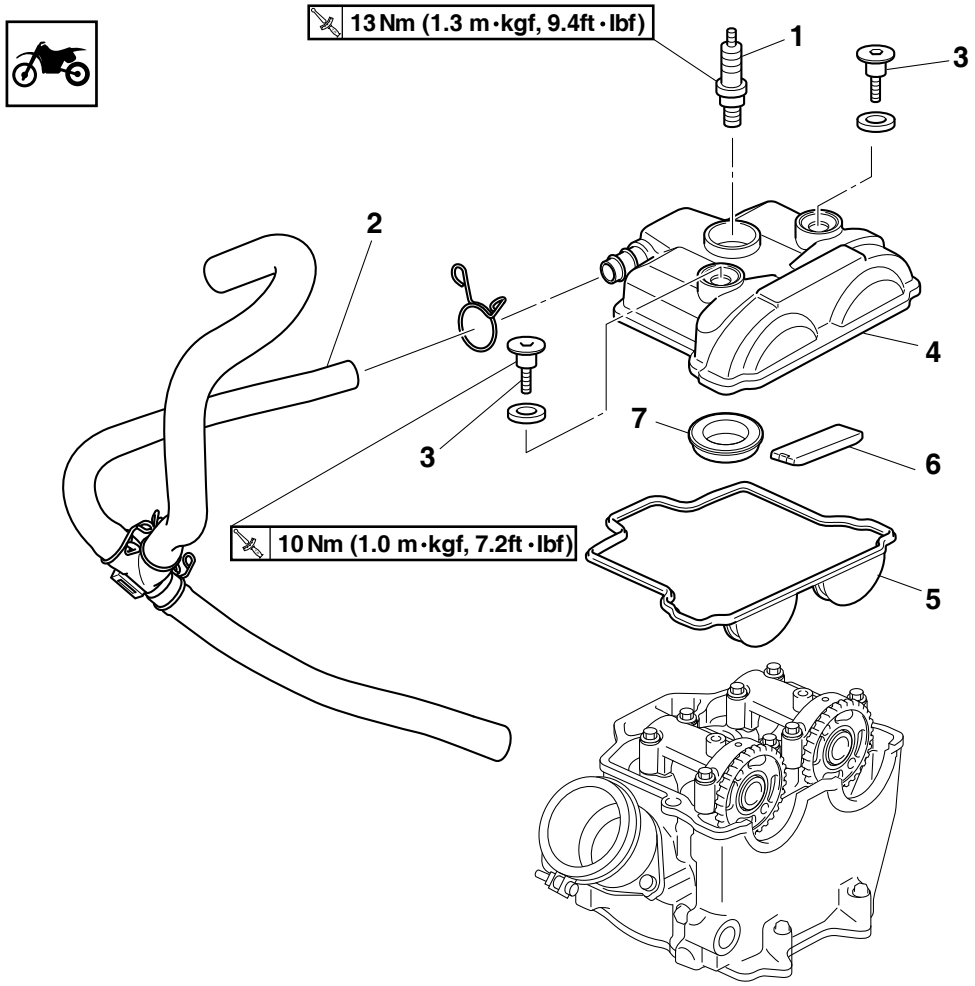

Order	Part name	Q'ty	Remarks
	Seat		Refer to "GENERAL CHASSIS" on page 5-1.
	Side cover (left/right)		Refer to "GENERAL CHASSIS" on page 5-1.
	Air scoop (left / right)		Refer to "GENERAL CHASSIS" on page 5-1.
	Fuel tank		Refer to "FUEL TANK" on page 8-1.
1	Spark plug	1	
2	Cylinder head breather hose	1	
3	Bolt (cylinder head cover)	2	
4	Cylinder head cover	1	
5	Cylinder head cover gasket	1	
6	Timing chain guide (top side)	1	
7	Cylinder head cover gasket	1	
			For installation, reverse the removal procedure.

Removing the camshaft

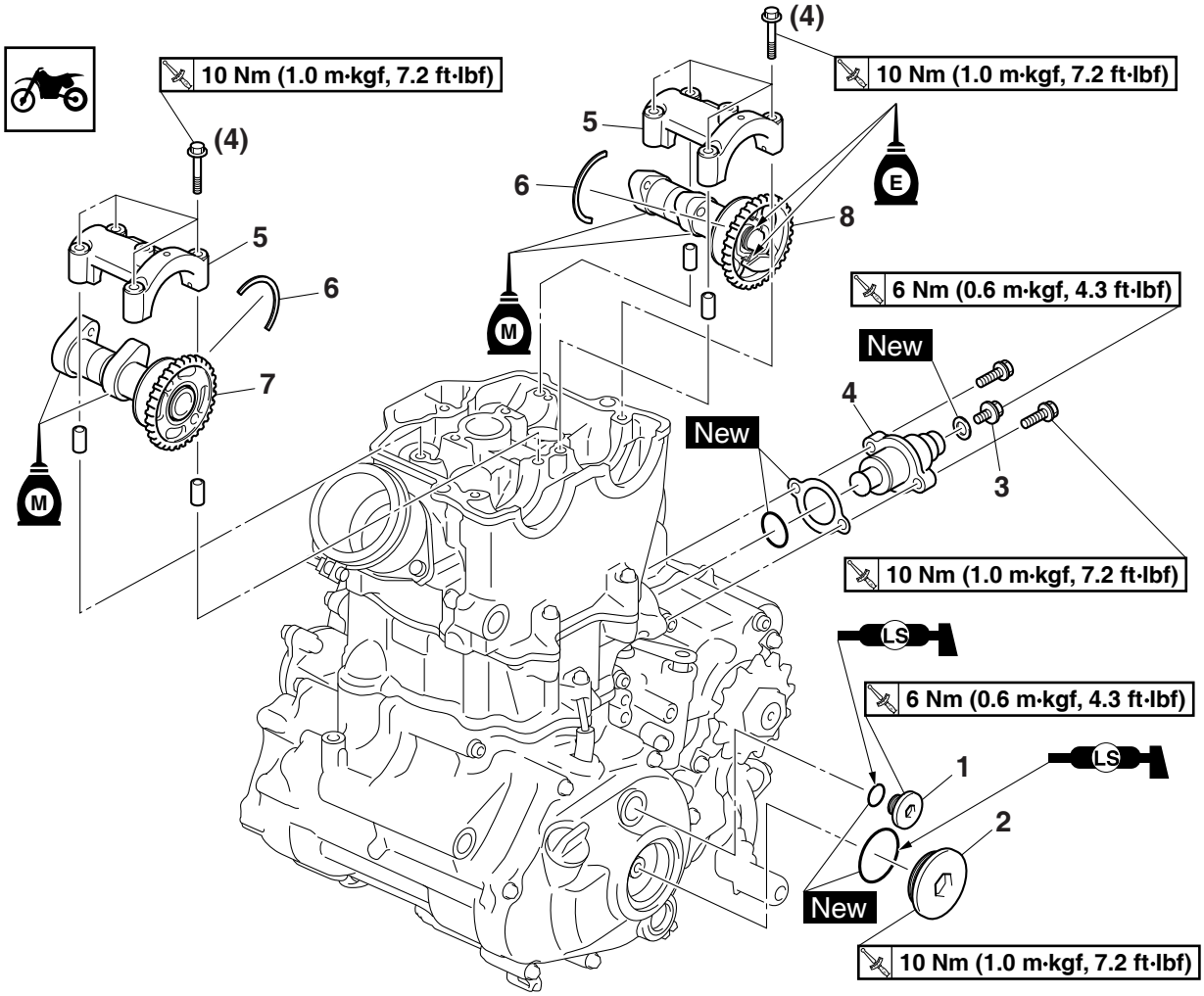

Order	Part name	Q'ty	Remarks
1	Timing mark accessing screw	1	
2	Crankshaft end accessing screw	1	
3	Timing chain tensioner cap bolt	1	
4	Timing chain tensioner	1	
5	Camshaft cap	2	
6	Clip	2	
7	Intake camshaft	1	
8	Exhaust camshaft	1	
			For installation, reverse the removal procedure.

REMOVING THE CAMSHAFT

1. Remove:
   - Timing mark accessing screw “1”
   - Crankshaft end accessing screw “2”

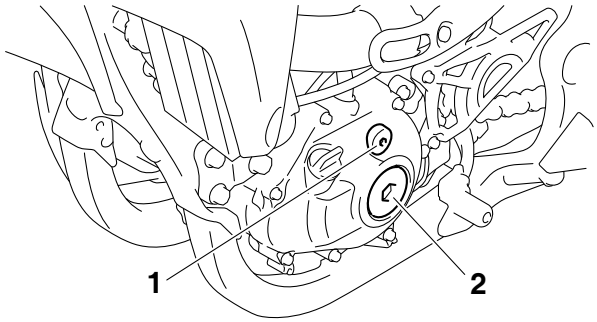

2. Align:
   - Alignment mark

▼▼▼▼▼▼▼▼▼▼▼▼▼▼▼▼▼▼▼▼▼▼▼▼▼▼▼▼▼▼▼▼▼▼

a. Turn the crankshaft counterclockwise with a wrench.
b. Align the top dead center (TDC) mark “a” on the rotor with the alignment mark “b” on the crankcase cover.

TIP

Align the alignment mark “c” on the exhaust camshaft sprocket and the alignment mark “d” on the intake camshaft sprocket with the edge of the cylinder head.

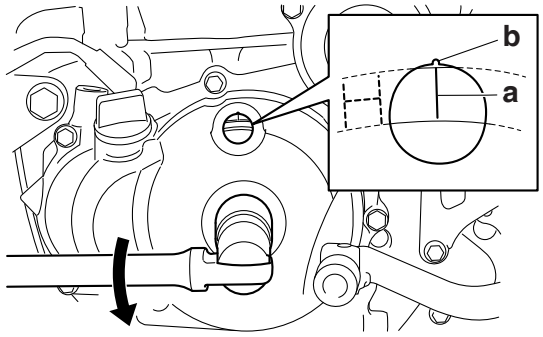

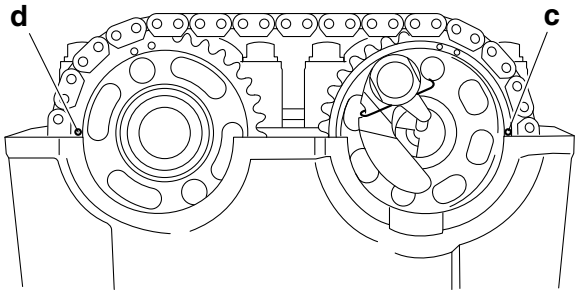

▲▲▲▲▲▲▲▲▲▲▲▲▲▲▲▲▲▲▲▲▲▲▲▲▲▲▲▲▲▲▲▲▲▲

3. Remove:
   - Timing chain tensioner cap bolt “1”
   - Timing chain tensioner “2”
   - Gaskets

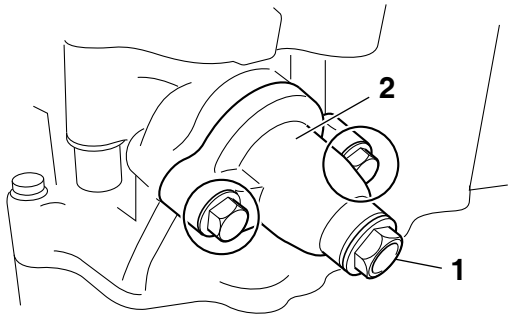

4. Remove:
   - Bolt (camshaft cap) “1”
   - Camshaft cap “2”
   - Clip “3”

TIP

- Remove the bolts (camshaft cap) in a criss-cross pattern, working from the outside in.
- In order to prevent the clip from falling into the crankcase, remove the camshaft cap.

NOTICE

The bolts (camshaft cap) must be removed evenly to prevent damage to the cylinder head, camshafts or camshaft caps.

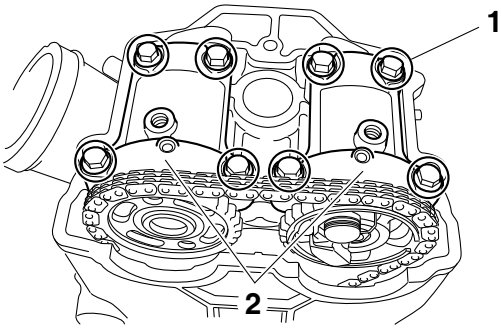

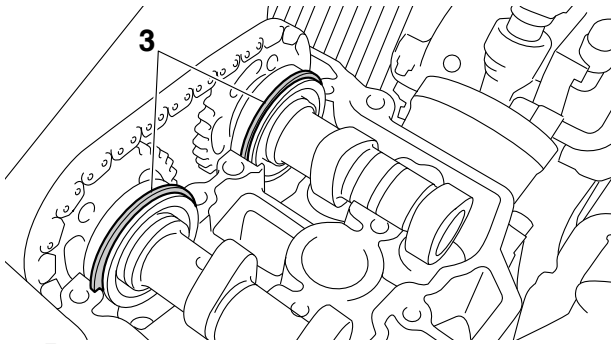

5. Remove:
   - Exhaust camshaft “1”
   - Intake camshaft “2”

TIP

Attach a wire “3” to the timing chain to prevent it from falling into the crankcase.

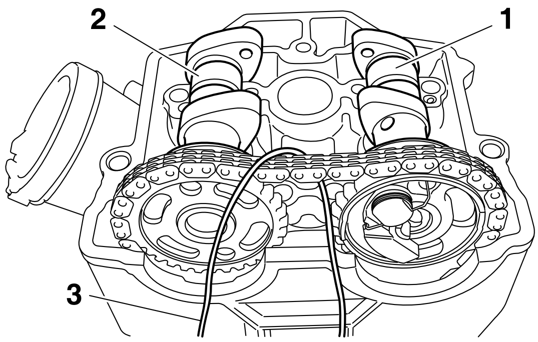

CHECKING THE CAMSHAFT

1. Check:
   - Camshaft lobes
     Blue discoloration/pitting/scratches → Replace the camshaft.
2. Measure:
   - Camshaft lobe dimensions “A” and “B”
     Out of specification → Replace the camshaft.

Camshaft lobe dimensions
Intake A
31.730–31.830 mm (1.2492–1.2531 in)
Limit
31.630 mm (1.2453 in)
Intake B
22.450–22.550 mm (0.8839–0.8878 in)
Limit
22.350 mm (0.8799 in)
Exhaust A
33.370–33.470 mm (1.3138–1.3177 in)
Limit
33.270 mm (1.3098 in)
Exhaust B
25.211–25.311 mm (0.9926–0.9965 in)
Limit
25.111 mm (0.9886 in)

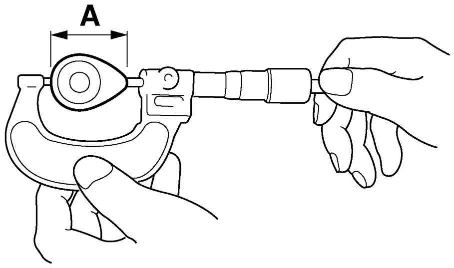

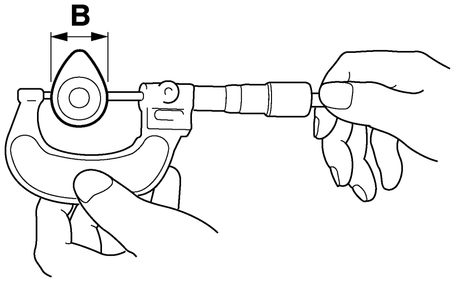

3. Measure:
   - Camshaft runout
     Out of specification → Replace.

Camshaft runout limit
0.030 mm (0.0012 in)

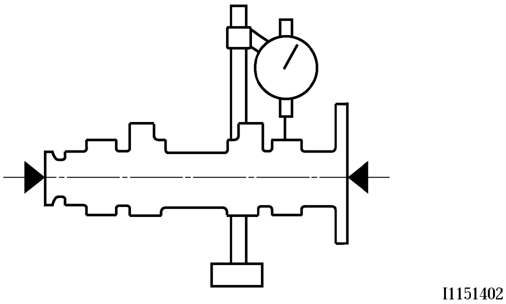

4. Measure:
   - Camshaft-journal-to-camshaft-cap clearance
     Out of specification → Measure the camshaft journal diameter.

Camshaft-journal-to-camshaft-cap clearance
0.028–0.062 mm (0.0011–0.0024 in)

▼▼▼▼▼▼▼▼▼▼▼▼▼▼▼▼▼▼▼▼▼▼▼▼▼▼▼▼▼▼▼▼▼▼▼▼

a. Install the camshaft into the cylinder head.
b. Position a strip of Plastigauge® “1” onto the camshaft journal as shown.

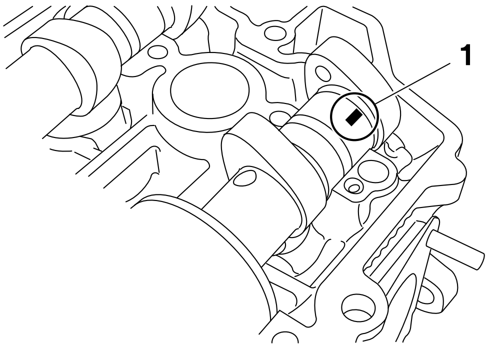

c. Install the dowel pins and the camshaft caps.

TIP

- Tighten the camshaft cap bolts in a crisscross pattern from innermost to outer caps.
- Do not turn the camshaft when measuring the camshaft journal-to-camshaft cap clearance.

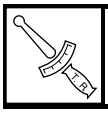	**Camshaft cap bolts** **10 Nm (1.0 m·kgf, 7.2 ft·lbf)**

d. Remove the camshaft caps and then measure the width of the Plastigauge® "1".

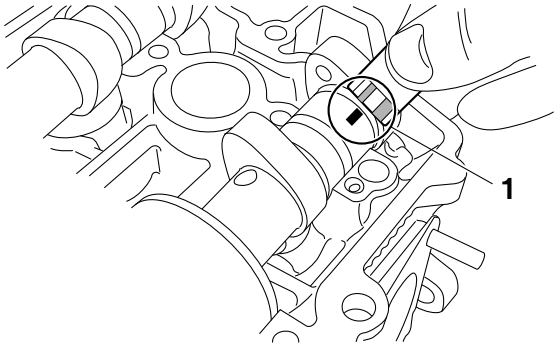

▲▲▲▲▲▲▲▲▲▲▲▲▲▲▲▲▲▲▲▲▲▲▲▲▲▲▲▲▲▲▲▲

5. Measure:
   - Camshaft journal diameter "a"
     Out of specification → Replace the camshaft.
     Within specification → Replace the cylinder head and the camshaft caps as a set.

	**Camshaft journal diameter** **21.959–21.972 mm (0.8645–0.8650 in)**

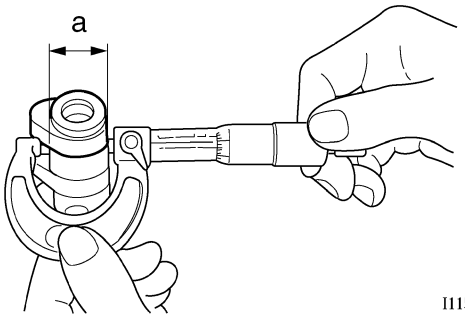

CHECKING THE TIMING CHAIN AND CAMSHAFT SPROCKET

1. Check:
   - Timing chain "1"
     Damage/stiffness → Replace the timing chain and camshaft as a set.
2. Check:
   - Camshaft sprocket
     More than 1/4 tooth wear "a" → Replace the camshaft and the timing chain as a set.

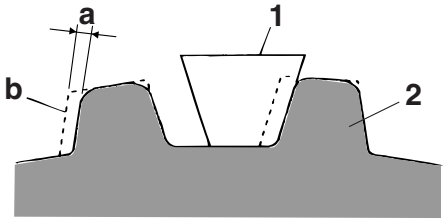

a. 1/4 tooth
b. Correct

1. Timing chain roller
2. Camshaft sprocket

CHECKING THE TIMING CHAIN TENSIONERS

1. Check:
   - Timing chain tensioner
     Crack/damage → Replace.

▼▼▼▼▼▼▼▼▼▼▼▼▼▼▼▼▼▼▼▼▼▼▼▼▼▼▼▼▼▼▼▼

a. While pressing the tensioner rod lightly with your fingers, use a thin screwdriver "1" to wind the tensioner rod up fully clockwise.
b. When releasing the screwdriver by pressing lightly with your fingers, make sure that the tensioner rod will come out smoothly.
c. If not, replace the tensioner assembly.

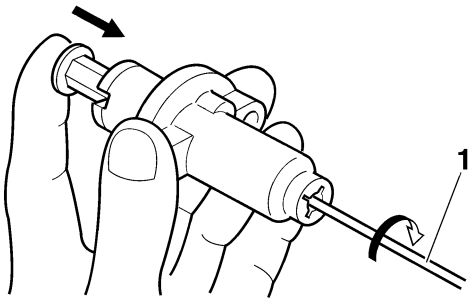

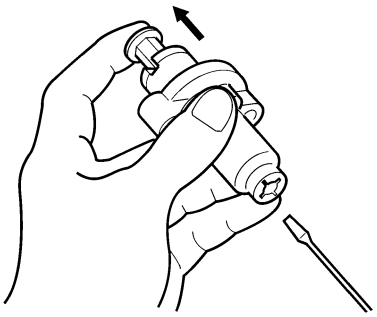

▲▲▲▲▲▲▲▲▲▲▲▲▲▲▲▲▲▲▲▲▲▲▲▲▲▲▲▲▲▲▲▲

CHECKING THE DECOMPRESSION SYSTEM

1. Check:
   - Decompression system

▼▼▼▼▼▼▼▼▼▼▼▼▼▼▼▼▼▼▼▼▼▼▼▼▼▼▼▼▼▼▼▼▼▼

a. Check that the decompressor cam “1” moves smoothly.
b. Check that the decompressor lever pin “2” projects from the camshaft.

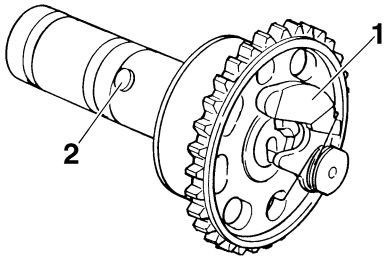

▲▲▲▲▲▲▲▲▲▲▲▲▲▲▲▲▲▲▲▲▲▲▲▲▲▲▲▲▲▲▲▲▲▲

INSTALLING THE CAMSHAFTS

1. Install:
   - Exhaust camshaft “1”
   - Intake camshaft “2”

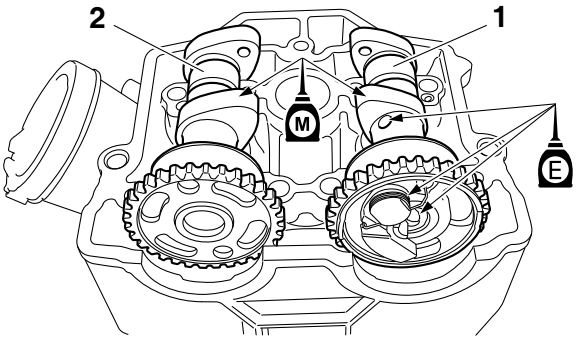

▼▼▼▼▼▼▼▼▼▼▼▼▼▼▼▼▼▼▼▼▼▼▼▼▼▼▼▼▼▼▼▼▼▼

a. Turn the crankshaft counterclockwise with a wrench.

TIP

- Apply molybdenum disulfide oil to the camshafts.
- Apply the engine oil on the decompression system.

b. Align the top dead center (TDC) mark “a” on the rotor with the alignment mark “b” on the crankcase cover.

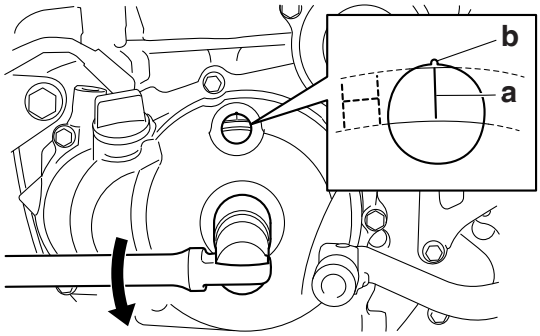

c. Fit the timing chain “3” onto both camshaft sprockets and install the camshafts on the cylinder head.

TIP

Make sure that the alignment mark “c” on the exhaust camshaft sprocket and the alignment mark “d” on the intake camshaft sprocket are aligned with the edge of the cylinder head.

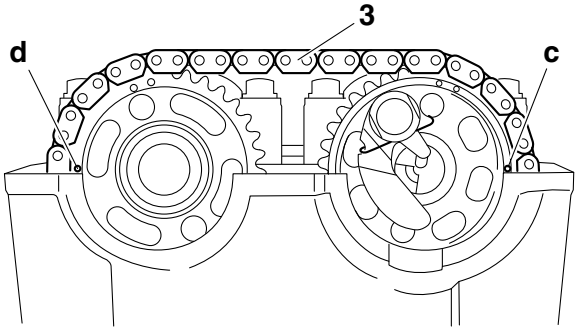

NOTICE

Do not turn the crankshaft during the camshaft installation. Damage or improper valve timing will result.

d. Install the clips, the camshaft caps and the bolts (camshaft cap).

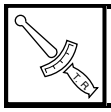	**Bolt (camshaft cap)** **10 Nm (1.0 m·kgf, 7.2 ft·lbf)**

TIP

- Before installing the clips, cover the cylinder head with a clean cloth to prevent the clips from coming off into the cylinder head cavity.
- Tighten the bolts to the specified torque in two or three steps in the proper tightening sequence as shown.

NOTICE

The bolts (camshaft cap) must be tightened evenly, or damage to the cylinder head, camshaft caps, and camshaft will result.

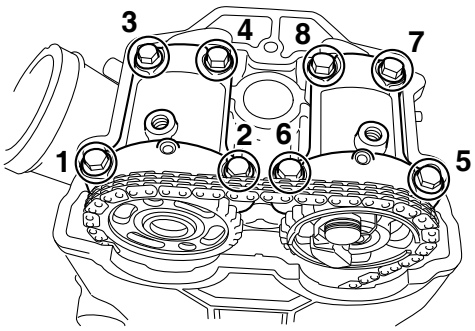

▲▲▲▲▲▲▲▲▲▲▲▲▲▲▲▲▲▲▲▲▲▲▲▲▲▲▲▲▲▲▲▲

2. Install:
   - Timing chain tensioner

▼▼▼▼▼▼▼▼▼▼▼▼▼▼▼▼▼▼▼▼▼▼▼▼▼▼▼▼▼▼▼▼

a. While pressing the tensioner rod lightly with your fingers, use a thin screwdriver to wind the tensioner rod up fully clockwise.

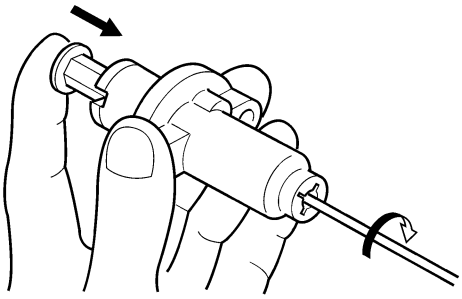

b. With the tensioner rod fully wound and the chain tensioner UP mark “a” facing upward, install the gasket “1”, the timing chain tensioner “2”, and the gasket “3”, and tighten the bolt “4”.

	Bolt (timing chain tensioner) **10 Nm (1.0 m·kgf, 7.2 ft·lbf)**

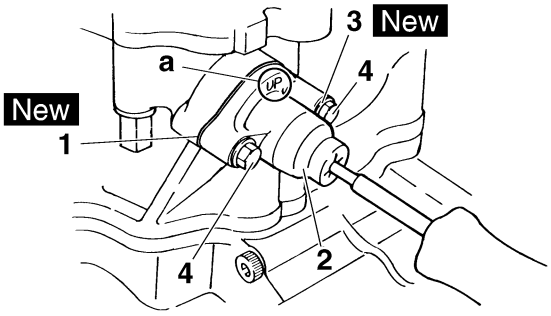

c. Release the screwdriver, check that the tensioner rod comes out smoothly, and tighten the gasket “5” and the cap bolt “6”.

	Tensioner cap bolt **6 Nm (0.6 m·kgf, 4.3 ft·lbf)**

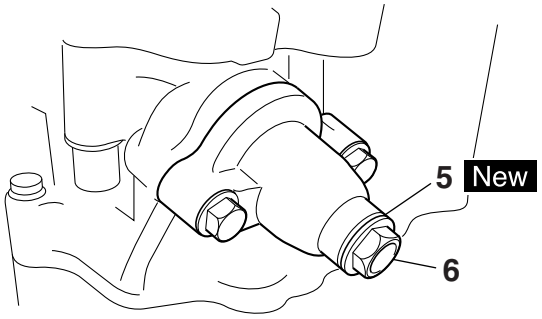

▲▲▲▲▲▲▲▲▲▲▲▲▲▲▲▲▲▲▲▲▲▲▲▲▲▲▲▲▲▲▲▲

3. Turn:
   - Crankshaft
     Counterclockwise several turns.
4. Check:
   - Top dead center (TDC) mark on the rotor
     Align with the crankcase alignment mark.
   - Camshaft match marks
     Align with the cylinder head surface.
     Out of alignment → Adjust.
5. Install:
   - Timing chain guide (top side) “1”
   - Cylinder head cover gasket “2”
   - Cylinder head cover “3”
   - Bolt (cylinder head cover) “4”

	Bolt (cylinder head cover) **10 Nm (1.0 m·kgf, 7.2 ft·lbf)**

TIP

Before installation, apply the sealant to the cylinder head cover gasket.

	Yamaha bond No. 1215 **90890-85505** **(Three bond No.1215®)**

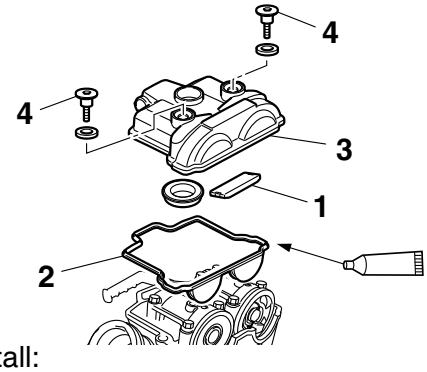

6. Install:
   - Cylinder head breather hose
   - Spark plug

	Spark plug **13 Nm (1.3m·kgf, 9.4 ft·lbf)**

CYLINDER HEAD

Removing the cylinder head

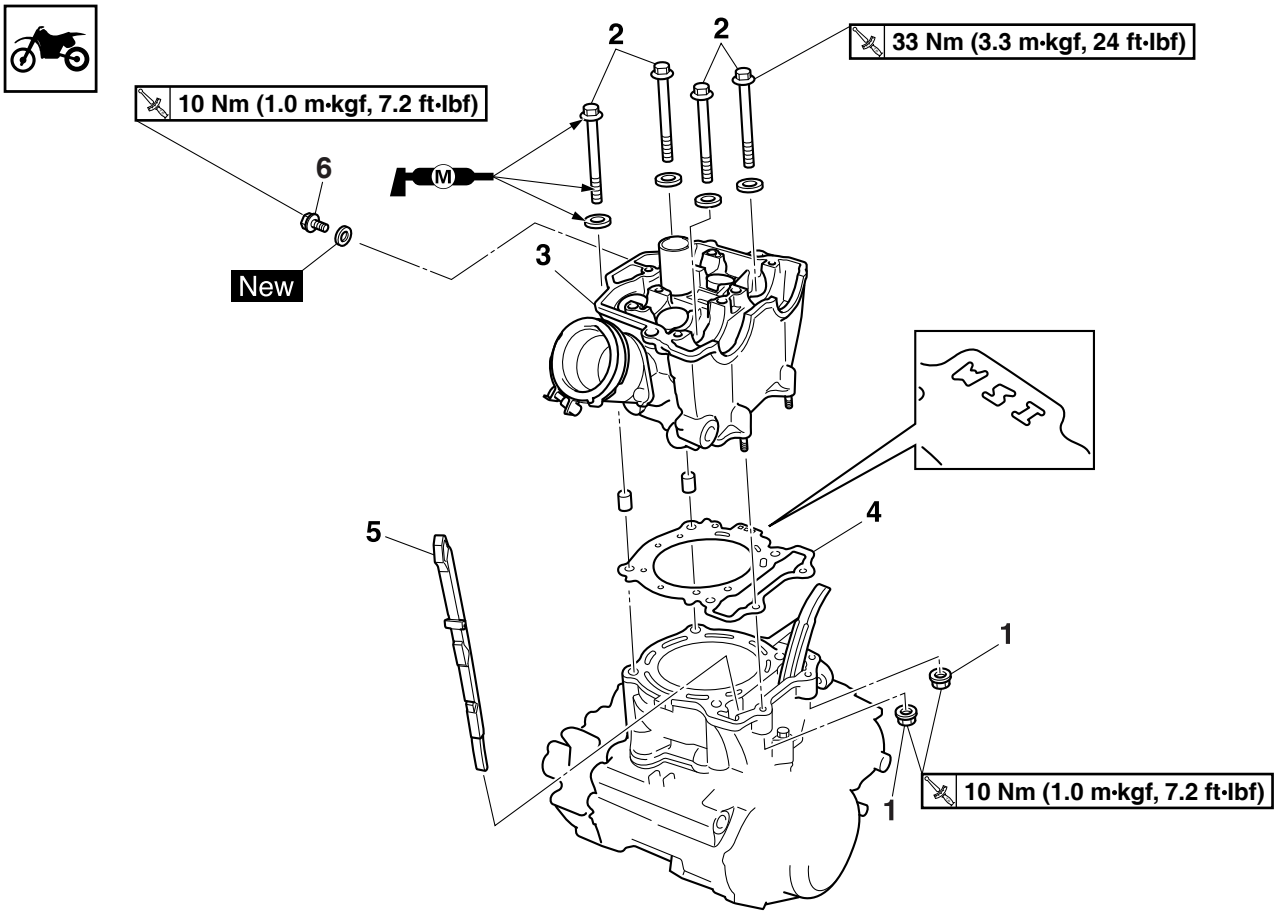

Order	Part name	Q'ty	Remarks
	Seat		Refer to "GENERAL CHASSIS" on page 5-1.
	Side cover (left/right)		Refer to "GENERAL CHASSIS" on page 5-1.
	Air scoop (left / right)		Refer to "GENERAL CHASSIS" on page 5-1.
	Fuel tank		Refer to "FUEL TANK" on page 8-1.
	Exhaust pipe and silencer		Refer to "ENGINE REMOVAL" on page 6-1.
	Radiator hose		Disconnect.
	Coolant temperature sensor coupler		Disconnect.
	Throttle body		Refer to "THROTTLE BODY" on page 8-7.
	Camshaft		Refer to "CAMSHAFT" on page 6-11.
	Upper engine bracket		Refer to "ENGINE REMOVAL" on page 6-1.
1	Nut (cylinder head)	2	
2	Bolt (cylinder head)	4	
3	Cylinder head	1	
4	Cylinder head gasket	1	
5	Timing chain guide (intake side)	1	
6	Oil check bolt	1	

Removing the cylinder head

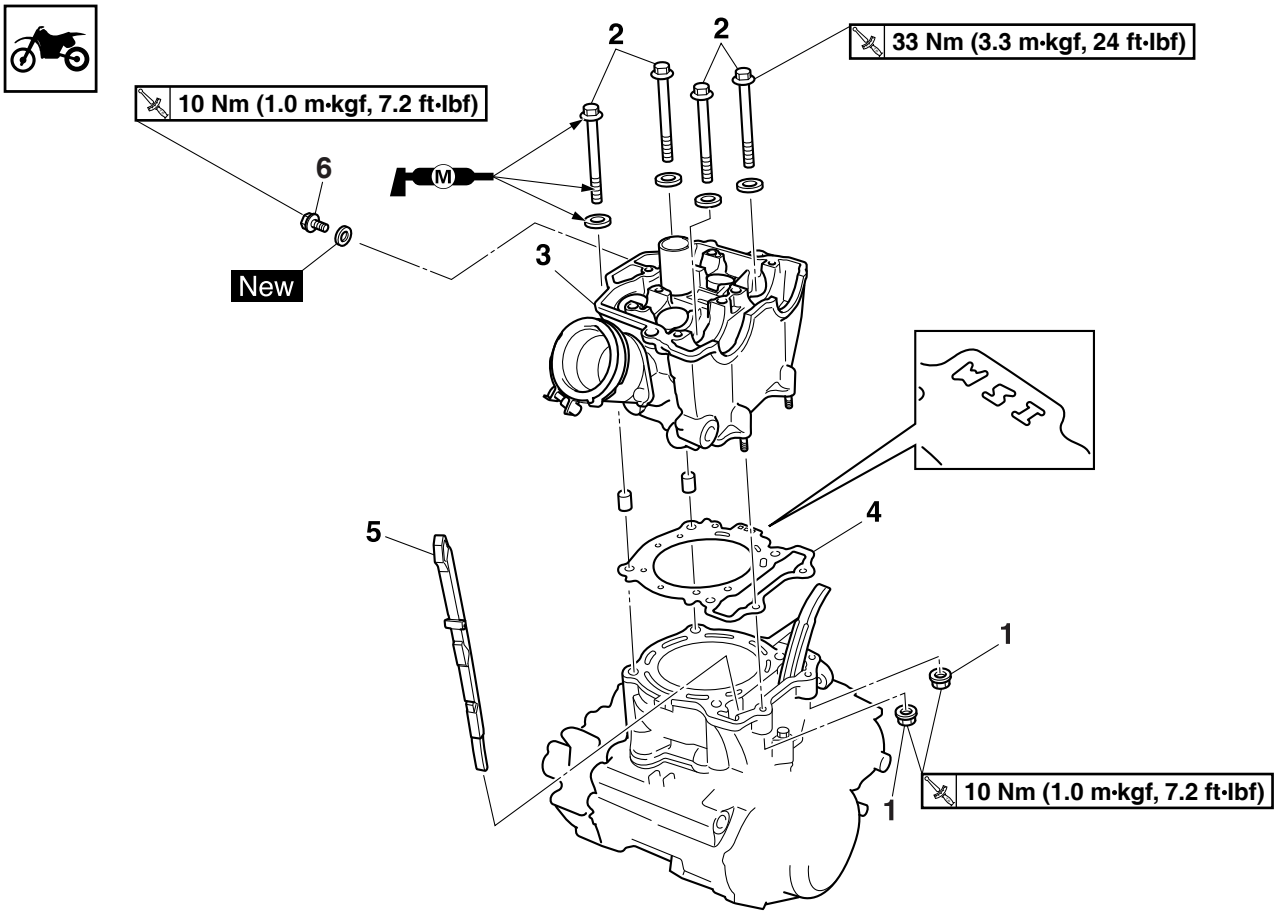

Order	Part name	Q'ty	Remarks
			For installation, reverse the removal procedure.

REMOVING THE CYLINDER HEAD

1. Remove:
   - Intake camshaft
   - Exhaust camshaft
     Refer to “REMOVING THE CAMSHAFT” on page 6-13.
2. Remove:
   - Cylinder head nuts
   - Cylinder head bolts

TIP

- Loosen the bolts in the proper sequence as shown.
- Loosen each bolt 1/2 of a turn at a time. After fully loosening all the bolts, remove them.

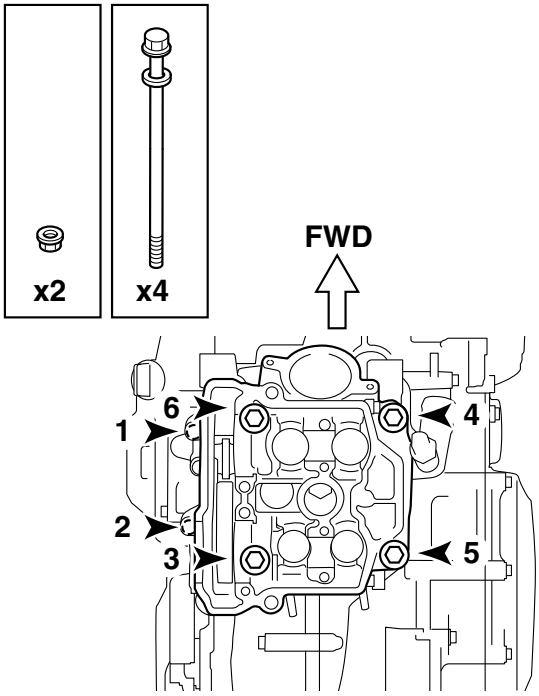

CHECKING THE TIMING CHAIN GUIDE (INTAKE SIDE)

1. Check:
   - Timing chain guide (intake side)
     Damage/wear → Replace.

CHECKING THE CYLINDER HEAD

1. Eliminate:
   - Combustion chamber carbon deposits

TIP

Use a rounded scraper, not a sharp instrument, in order not to damage or scratch the spark plug bore threads.

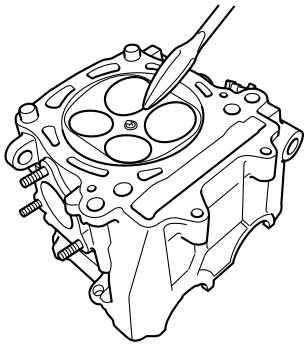

2. Check:
   - Cylinder head
     Damage/scratches → Replace.

TIP

When replacing the cylinder head, replace also the valve.
Refer to “CHECKING THE VALVE SEATS” on page 6-26.

   - Cylinder head coolant passages
     Mineral deposits/rust → Eliminate.
3. Measure:
   - Cylinder head warpage
     Out of specification → Resurface the cylinder head.

	Warpage limit **0.05 mm (0.0020 in)**

▼▼▼▼▼▼▼▼▼▼▼▼▼▼▼▼▼▼▼▼▼▼▼▼▼▼▼▼▼▼▼▼▼▼

a. Place a straightedge and a thickness gauge across the cylinder head.
b. Measure the warpage.
c. If the limit is exceeded, resurface the cylinder head as follows.
d. Place a 400–600 grit wet sandpaper on a surface plate, and resurface the cylinder head using a figure-eight sanding pattern.

TIP

To ensure an even surface, turn the cylinder head several times.

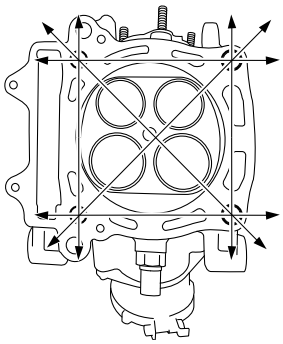

▲▲▲▲▲▲▲▲▲▲▲▲▲▲▲▲▲▲▲▲▲▲▲▲▲▲▲▲▲▲▲▲▲▲

INSTALLING THE CYLINDER HEAD

1. Install:
   - Timing chain guide (intake side) “1”
   - Dowel pin “2”
   - Cylinder head gasket “3” New
   - Cylinder head “4”

TIP

- Install the cylinder head gasket with its character stamp “a” rearward of the vehicle as shown.
- While pulling up the timing chain, install the timing chain guide (intake side) and the cylinder head.

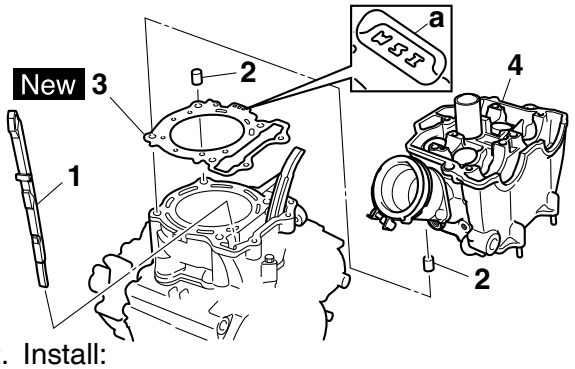

2. Install:
   - Washer “1”
   - Cylinder head bolt “2”
   - Cylinder head nut “3”

TIP

Apply molybdenum disulfide grease to the threads and contact surfaces of the bolts and to both contact surfaces of the washers.

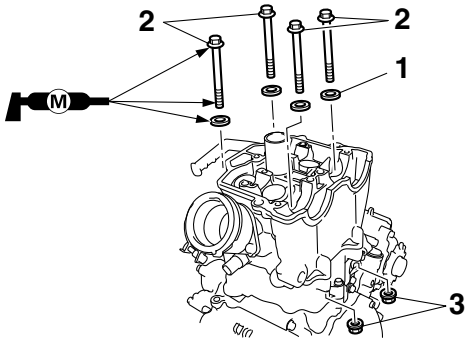

3. Tighten:
   - Cylinder head bolt “1” – “4”
   - Cylinder head nut “5”, “6”

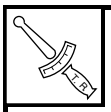	**Cylinder head bolt “1” – “4”** **33 Nm (3.3 m·kgf, 24 ft·lbf)** **Cylinder head nut “5”, “6”** **10 Nm (1.0 m·kgf, 7.2 ft·lbf)**

TIP

Tighten the bolts and nuts to the specified torque in two or three steps in the proper tightening sequence as shown.

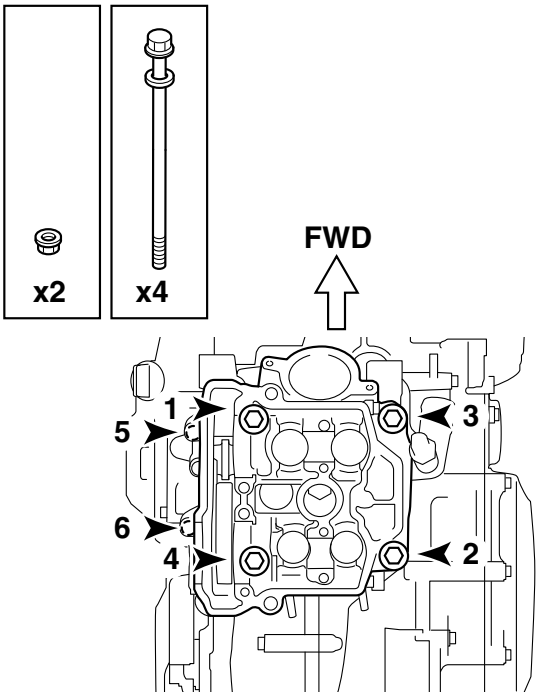

VALVES AND VALVE SPRINGS

Removing the valves and valve springs

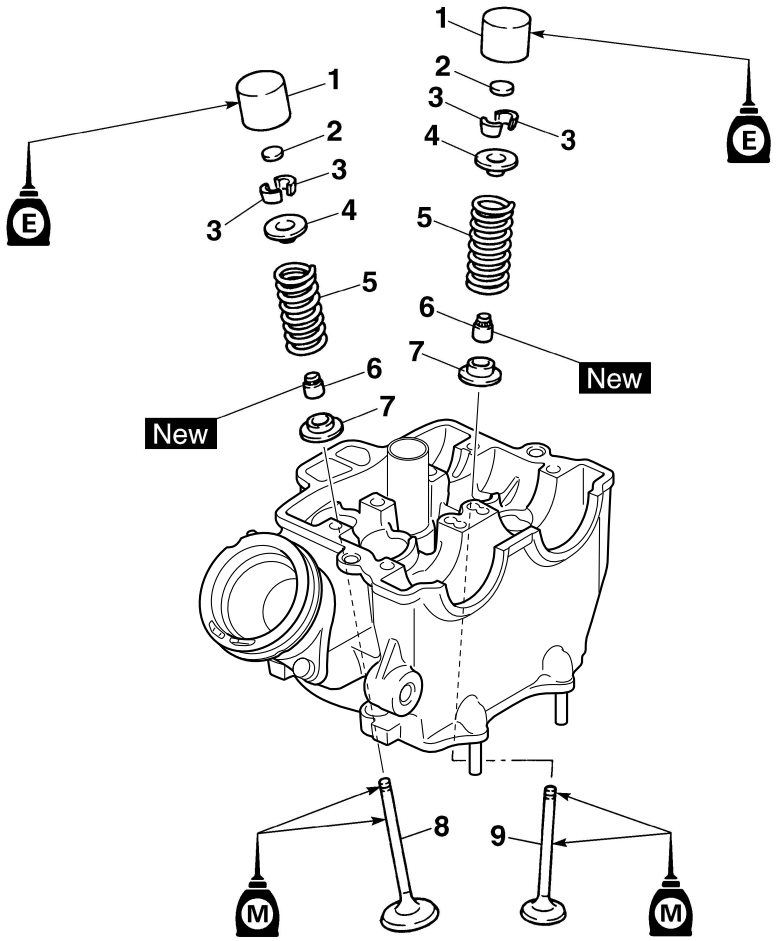

Order	Part name	Q'ty	Remarks
	Cylinder head		Refer to "CYLINDER HEAD" on page 6-18.
1	Valve lifter	4	
2	Adjusting pad	4	
3	Valve cotter	8	
4	Valve spring retainer	4	
5	Valve spring	4	
6	Valve stem seal	4	
7	Valve spring seat	4	
8	Intake valve	2	
9	Exhaust valve	2	
			For installation, reverse the removal procedure.

REMOVING THE VALVES

TIP

Before removing the internal parts of the cylinder head (e.g., valves, valve springs, valve seats), make sure that the valves are properly sealed.

1. Remove:
   - Valve lifter “1”
   - Adjusting pad “2”

TIP

- Place a cloth in the timing chain space to prevent adjusting pads from falling into the crankcase.
- Make a note of the positions of valve lifters and adjusting pads so that they can be reinstalled in their original places.

Valve lapper
90890-04101
Valve lapping tool
YM-A8998

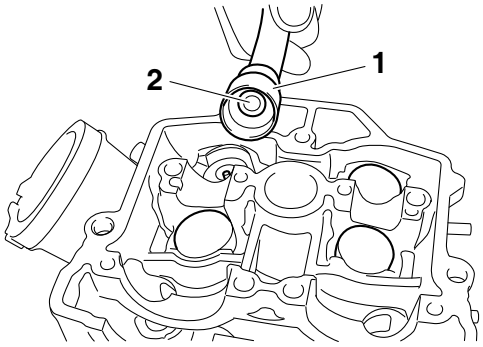

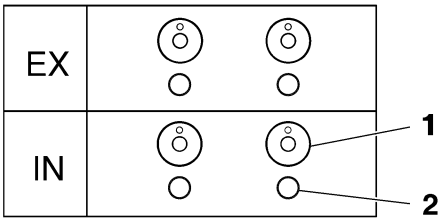

2. Check:
   - Valve sealing
     Leakage at the valve seat → Check the valve face, the valve seat, and the valve seat width.
     Refer to “CHECKING THE VALVE SEATS” on page 6-26.

▼▼▼▼▼▼▼▼▼▼▼▼▼▼▼▼▼▼▼▼▼▼▼▼▼▼▼▼▼▼▼▼▼▼

a. Pour a clean solvent “a” into the intake and exhaust ports.
b. Check that the valves are properly sealed.

TIP

Check that there are no kerosene leaks from the valve seat “1”.

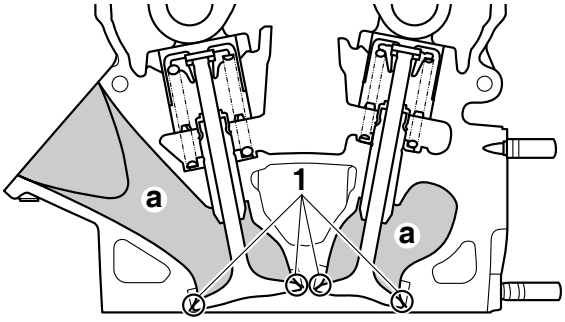

▲▲▲▲▲▲▲▲▲▲▲▲▲▲▲▲▲▲▲▲▲▲▲▲▲▲▲▲▲▲▲▲▲▲

3. Remove:
   - Valve cotter “1”

TIP

Remove the valve cotters by compressing the valve spring with the valve spring compressor “2” and the valve spring compressor adapter “3”.

Valve spring compressor
90890-04019
Valve spring compressor
YM-04019
Valve spring compressor attachment
90890-04108
Valve spring compressor adapter 22 mm
YM-04108

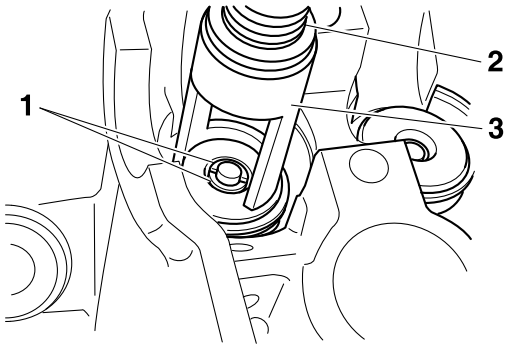

4. Remove:
   - Valve spring retainer “1”
   - Valve spring “2”
   - Valve “3”
   - Valve stem seat “4”
   - Valve spring seat “5”

TIP

Identify the position of each part very carefully so that it can be reinstalled in its original place.

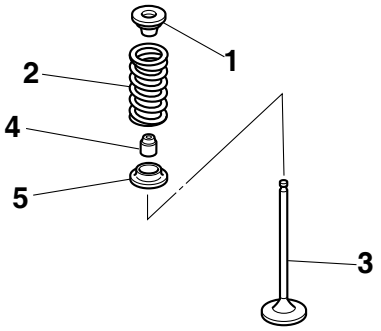

CHECKING THE VALVES AND VALVE GUIDES

1. Measure:
   - Valve-stem-to-valve-guide clearance
     Out of specification → Replace the valve guide.

Valve-stem-to-valve-guide clearance = Valve guide inside diameter “a” - Valve stem diameter “b”

Valve-stem-to-valve-guide clearance (intake)
0.010–0.037 mm (0.0004–0.0015 in)
Limit
0.080 mm (0.0032 in)
Valve-stem-to-valve-guide clearance (exhaust)
0.025–0.052 mm (0.0010–0.0020 in)
Limit
0.100 mm (0.0039 in)

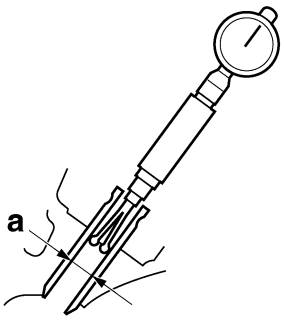

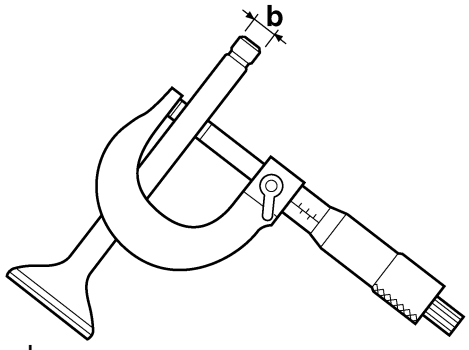

2. Replace:
   - Valve guide

TIP

To ease valve guide removal and installation, and to maintain the correct fit, heat the cylinder head to 100 °C (212 °F) in an oven.

▼▼▼▼▼▼▼▼▼▼▼▼▼▼▼▼▼▼▼▼▼▼▼▼▼▼▼▼▼▼▼▼▼▼

a. Remove the valve guide with the valve guide remover “1”.

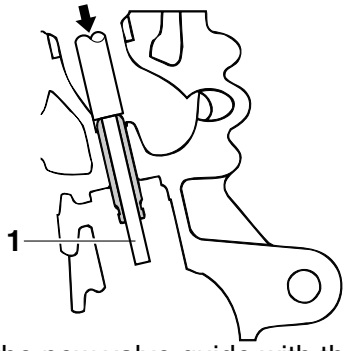

b. Install the new valve guide with the valve guide installer “2” and the valve guide remover “1”.

Valve guide installation height “a”
Intake
10.8–11.2 mm (0.43–0.44 in)
Exhaust
11.2–11.6 mm (0.44–0.46 in)

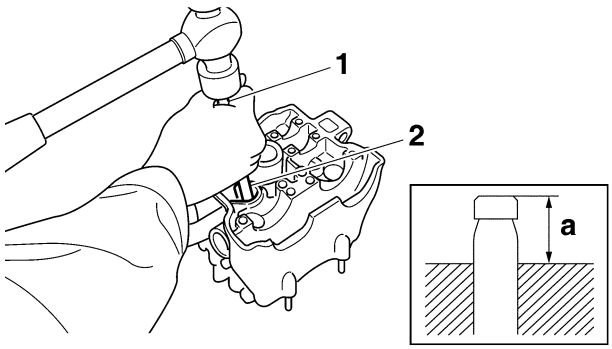

c. After installing the valve guide, expand the hole in the valve guide with the valve guide reamer “3” to obtain the proper valve-stem-to-valve-guide clearance.

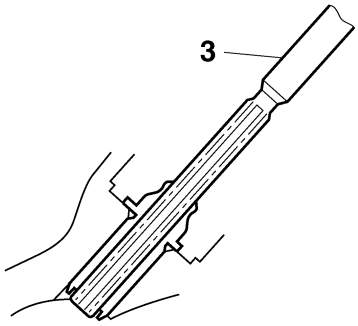

TIP

After replacing the valve guide, reface the valve seat.

Intake
Valve guide remover (ø5)
90890-04097
Valve guide remover (5.0 mm)
YM-04097
Valve guide installer (ø5)
90890-04098
Valve guide installer (5.0 mm)
YM-04098
Valve guide reamer (ø5)
90890-04099
Valve guide reamer (5.0 mm)
YM-04099
Exhaust
Valve guide remover (ø4.5)
90890-04116
Valve guide remover (4.5 mm)
YM-04116
Valve guide installer (ø4.5)
90890-04117
Valve guide installer (4.5 mm)
YM-04117
Valve guide reamer (ø4.5)
90890-04118
Valve guide reamer (4.5 mm)
YM-04118

▲▲▲▲▲▲▲▲▲▲▲▲▲▲▲▲▲▲▲▲▲▲▲▲▲▲▲▲▲▲▲▲▲▲

3. Eliminate:
   - Carbon deposits
     (from the valve face and valve seat)
4. Check:
   - Valve face
     Pitting/wear → Grind the valve face.
   - Valve stem end
     Mushroom shape or diameter larger than the body of the valve stem → Replace the valve.
5. Measure:
   - Valve margin thickness D “a”
     Out of specification → Replace the valve.

Valve margin thickness D (intake)
1.20 mm (0.0472 in)
Valve margin thickness D (exhaust)
0.85 mm (0.0335 in)

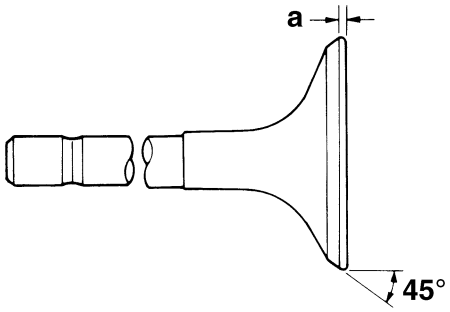

6. Measure:
   - Valve stem runout
     Out of specification → Replace the valve.

TIP

- When installing a new valve, always replace the valve guide.
- If the valve is removed or replaced, always replace the valve stem seal.

Valve stem runout
0.010 mm (0.0004 in)

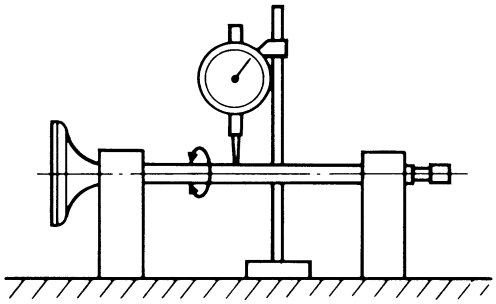

CHECKING THE VALVE SEATS

1. Eliminate:
   - Carbon deposits
     (from the valve face and valve seat)
2. Check:
   - Valve seat
     Pitting/wear → Replace the cylinder head.
3. Measure:
   - Valve seat width C “a”
     Out of specification → Replace the cylinder head.

Valve seat width C (intake)
0.90–1.10 mm (0.0354–0.0433 in)
Valve seat width C (exhaust)
0.90–1.10 mm (0.0354–0.0433 in)

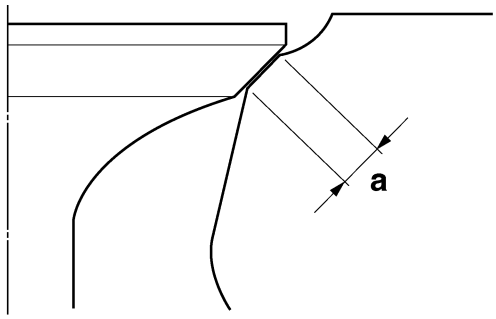

▼▼▼▼▼▼▼▼▼▼▼▼▼▼▼▼▼▼▼▼▼▼▼▼▼▼▼▼▼▼▼▼▼▼

a. Apply Mechanic’s blueing dye (Dykem) “b” onto the valve face.

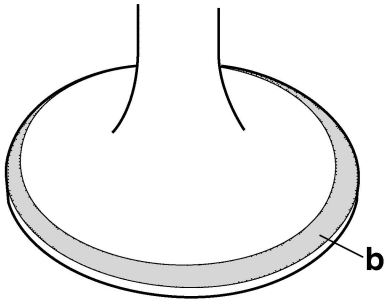

b. Install the valve into the cylinder head.
c. Press the valve through the valve guide and onto the valve seat to make a clear impression.
d. Measure the valve seat width “c”.

TIP

Where the valve seat and the valve face are in contact with each other, the blueing will have been removed.

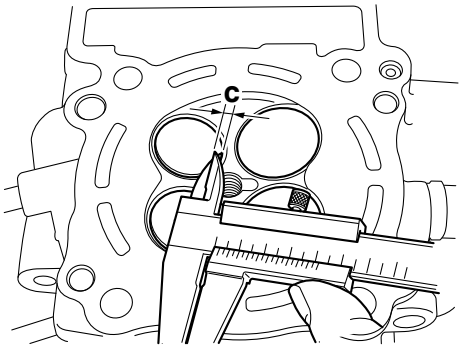

▲▲▲▲▲▲▲▲▲▲▲▲▲▲▲▲▲▲▲▲▲▲▲▲▲▲▲▲▲▲▲▲▲▲

4. Lap:
   - Valve face
   - Valve seat

NOTICE

This model uses titanium intake and exhaust valves.
Do not use the valves used for lapping the valve seat. Always replace the valves used for lapping with new ones.

TIP

- When replacing the cylinder head, replace also the valves with new ones without them.
- When replacing the valves or the valve guides, use new valves to lap the valve seats, and then replace them with new valves.

▼▼▼▼▼▼▼▼▼▼▼▼▼▼▼▼▼▼▼▼▼▼▼▼▼▼▼▼▼▼▼▼▼▼

a. Apply a coarse lapping compound “a” to the valve face.

NOTICE

Do not let the lapping compound enter the gap between the valve stem and the valve guide.

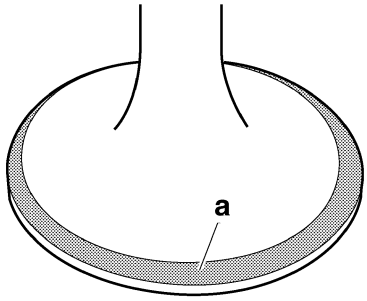

b. Apply molybdenum disulfide oil onto the valve stem.
c. Install the valve into the cylinder head.
d. Turn the valve until the valve face and the valve seat are evenly polished, then clean off all of the lapping compound.

TIP

While turning the valve lapper, tap and lap the valve seat.

e. Apply a fine lapping compound to the valve face, and repeat the above steps.
f. After every lapping step, be sure to clean off all of the lapping compound from the valve face and the valve seat.
g. Apply Mechanic's blueing dye (Dykem) "b" onto the valve face.

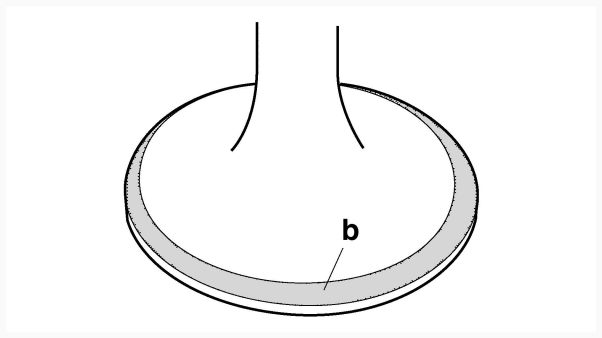

h. Install the valve into the cylinder head.
i. Press the valve through the valve guide and onto the valve seat to make a clear impression.
j. Measure the valve seat width "c" again. If the valve seat width is out of specification, reface and lap the valve seat.

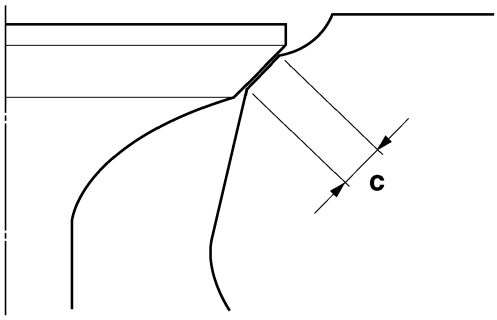

▲▲▲▲▲▲▲▲▲▲▲▲▲▲▲▲▲▲▲▲▲▲▲▲▲▲▲▲▲▲▲▲▲▲

CHECKING THE VALVE SPRINGS

1. Measure:
   - Valve spring free length "a"
     Out of specification → Replace the valve spring.

Free length (intake)
36.69 mm (1.44 in)
Limit
35.69 mm (1.41 in)
Free length (exhaust)
34.86 mm (1.37 in)
Limit
33.86 mm (1.33 in)

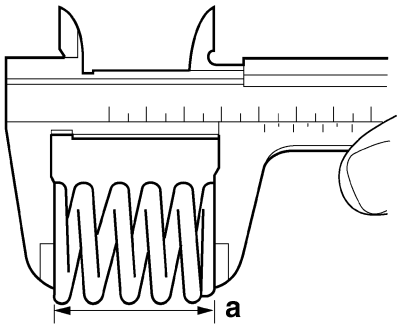

2. Measure:
   - Compressed valve spring force "a"
     Out of specification → Replace the valve spring.

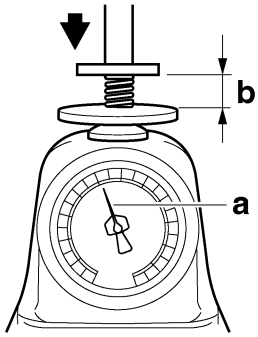

b. Installed length

Installed compression spring force (intake)
146.00–168.00 N (14.89–17.13 kgf, 32.82–37.77 lbf)
Installed compression spring force (exhaust)
137.00–157.00 N (13.97–16.01 kgf, 30.80–35.29 lbf)
Installed length (intake)
31.40 mm (1.24 in)
Installed length (exhaust)
28.50 mm (1.12 in)

3. Measure:
   - Valve spring tilt "a"
     Out of specification → Replace the valve spring.

Spring tilt (intake)
2.5 °/1.6 mm (2.5 °/0.06 in)
Spring tilt (exhaust)
2.5 °/1.5 mm (2.5 °/0.06 in)

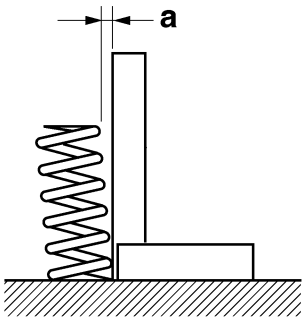

CHECKING THE VALVE LIFTERS

1. Check:
   - Valve lifter
     Damage/scratches → Replace the valve lifters and cylinder head.

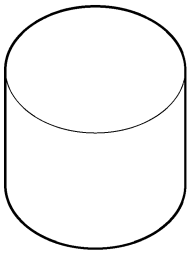

I1170701

INSTALLING THE VALVES

1. Clean:
   - Valve stem end

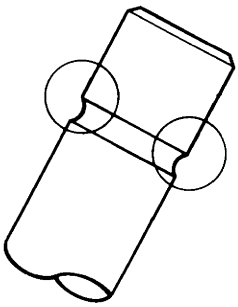

2. Lubricate:
   - Valve stem “1”
   - Valve stem seal “2”

	Recommended lubricant **Molybdenum disulfide oil**

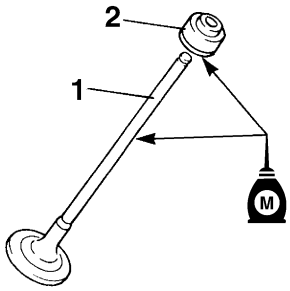

3. Install:
   - Spring seat “1”
   - Valve stem seal “2” New
   - Valve “3”
   - Valve spring “4”
   - Valve spring retainer “5”
     (to the cylinder head)

TIP

- Make sure each valve is installed in its original place.
- Install the valve springs with the larger pitch “a” facing up.

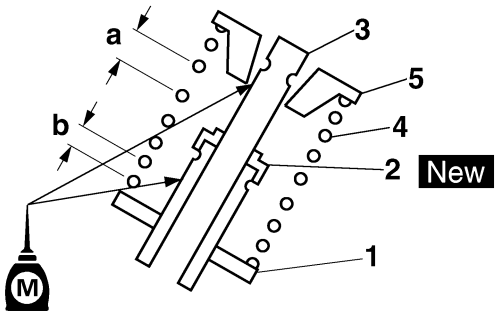

b. Smaller pitch

4. Install:
   - Valve cotter “1”

TIP

Install the valve cotters by compressing the valve spring with the valve spring compressor “2” and the valve spring compressor adapter “3”.

	Valve spring compressor **90890-04019** **Valve spring compressor** **YM-04019** **Valve spring compressor attachment** **90890-04108** **Valve spring compressor adapter 22 mm** **YM-04108**

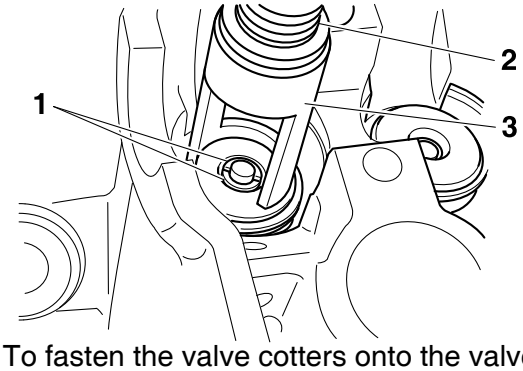

5. To fasten the valve cotters onto the valve stem, lightly tap the valve tip with a soft-face hammer.

NOTICE

Hitting the valve tip with excessive force could damage the valve.

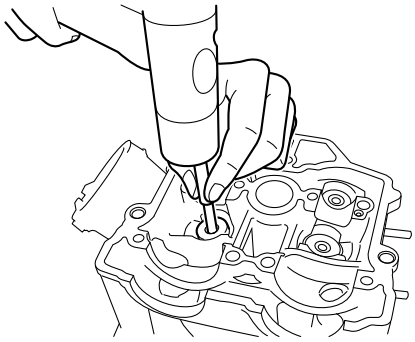

6. Lubricate:
   - Adjusting pad “1”
   - Valve lifter “2”

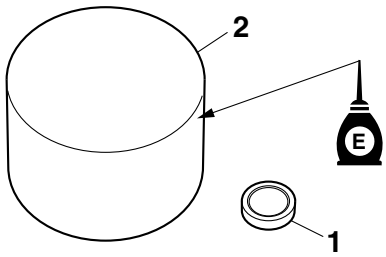

7. Install:
   - Adjusting pad
   - Valve lifter

TIP

- Check that the valve lifter turns smoothly when rotated with your finger.
- Make sure that the valve lifter and the adjusting pad are reinstalled in their original positions.

CYLINDER AND PISTON

Removing the cylinder and piston

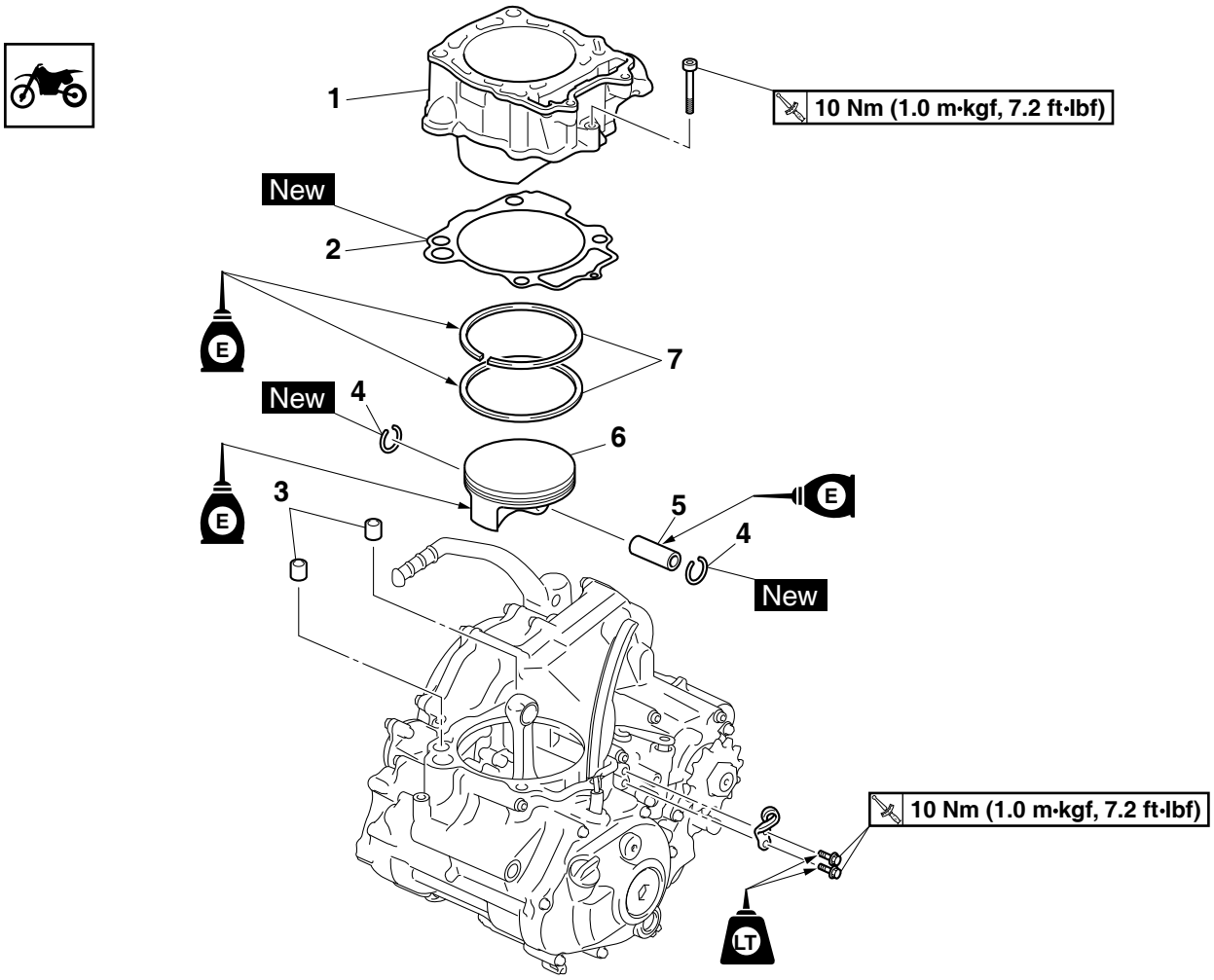

Order	Part name	Q'ty	Remarks
	Cylinder head		Refer to "CYLINDER HEAD" on page 6-18.
1	Cylinder body	1	
2	Gaskets	1	
3	Dowel pin	2	
4	Piston pin clip	2	
5	Piston pin	1	
6	Piston	1	
7	Piston ring set	1	
			For installation, reverse the removal procedure.

REMOVING THE PISTON

1. Remove:
   - Piston pin clip “1”
   - Piston pin “2”
   - Piston “3”

NOTICE

Do not use a hammer to drive the piston pin out.

TIP

- Before removing the piston pin clip, cover the crankcase opening with a cloth to prevent the piston pin clip from falling into the crankcase.
- Before removing the piston pin, deburr the piston pin clip’s groove and the piston pin’s bore area. If the piston pin groove is deburred and the piston pin is still difficult to remove, use the piston pin puller set “4”.

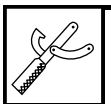

Piston pin puller set
90890-01304
Piston pin puller
YU-01304

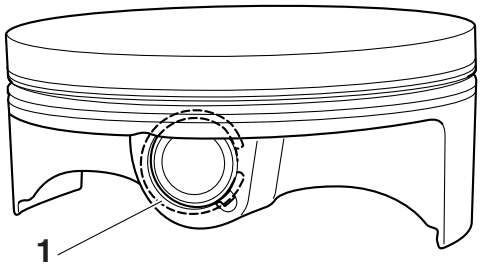

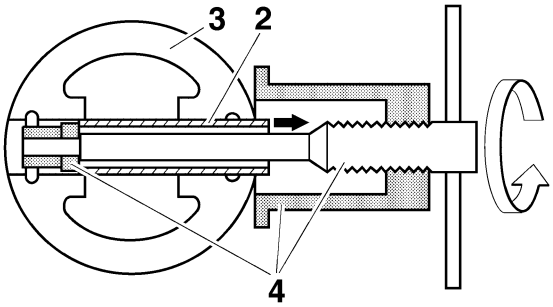

2. Remove:
   - Top ring
   - Oil ring

TIP

When removing a piston ring, open the end gap with your fingers and lift the opposite end gap of the piston ring over the piston crown.

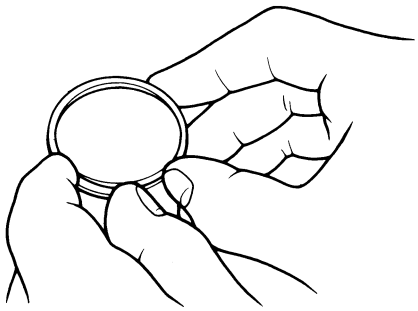

CHECKING THE CYLINDER AND PISTON

1. Check:
   - Piston wall (Sidewall)
   - Cylinder wall
     Vertical scratches → Replace the cylinder, and replace the piston and piston rings as a set.
2. Measure:
   - Piston-to-cylinder clearance

▼▼▼▼▼▼▼▼▼▼▼▼▼▼▼▼▼▼▼▼▼▼▼▼▼▼▼▼▼▼▼▼▼▼

a. Measure the cylinder bore with the cylinder bore gauge.

TIP

Measure cylinder bore by taking side-to-side and front-to-back measurements of the cylinder. Then, find the average of the measurements.

Bore
77.000–77.010 mm (3.0315–3.0319 in)
Taper limit
0.050 mm (0.0020 in)
Out of round limit
0.050 mm (0.0020 in)

Cylinder bore = maximum of D_1–D_6
Taper limit = (maximum of D_1or D_2) - (maximum of D_5 or D_6)
Out of round limit = maximum of D_1, D_3 or D_5 - minimum of D_2, D_4 or D_6

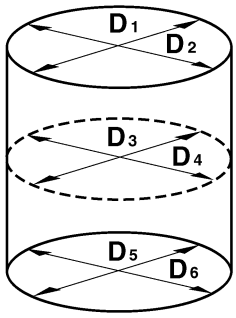

b. If out of specification, rebore or replace the cylinder, and replace the piston and the piston rings as a set.
c. Measure the piston outside diameter D “a” at the measurement position H “b” with the micrometer.

Diameter D
76.955–76.970 mm (3.0297–3.0303 in)
Measurement position H
9.0 mm (0.35 in)

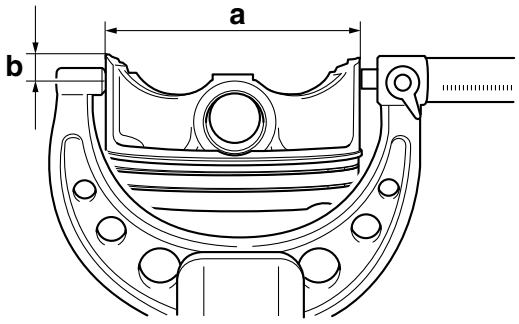

d. If out of specification, replace the cylinder, the piston, and the piston rings as a set.
e. Calculate the piston-to-cylinder clearance with the following formula.

Piston-to-cylinder clearance =
Cylinder bore - Piston diameter

Piston-to-cylinder clearance
0.030–0.055 mm (0.0012–0.0022 in)
Limit
0.15 mm (0.006 in)

f. If out of specification, replace the cylinder, the piston, and the piston rings as a set.

▲▲▲▲▲▲▲▲▲▲▲▲▲▲▲▲▲▲▲▲▲▲▲▲▲▲▲▲▲▲▲▲

CHECKING THE PISTON RINGS

1. Measure:
   • Piston ring side clearance
   Out of specification → Replace the piston and piston rings as a set.

TIP

Before measuring the piston ring side clearance, eliminate any carbon deposits from the piston ring grooves and piston rings.

Ring side clearance
0.030–0.065 mm (0.0012–0.0026 in)
Limit
0.120 mm (0.0047 in)

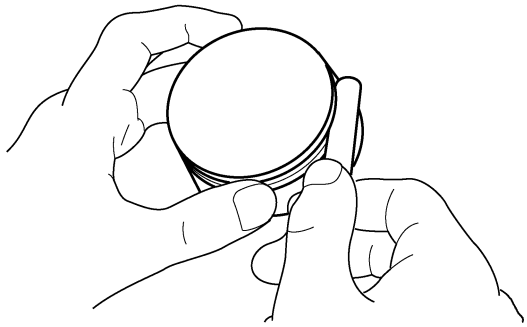

2. Install:
   • Piston rings

TIP

Level the piston ring into the cylinder with the piston.

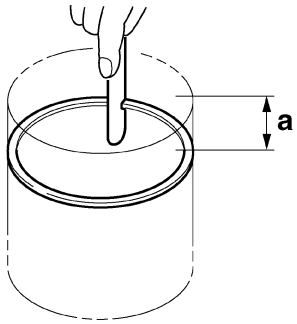

a. 10 mm (0.39 in)

3. Measure:
   • Piston ring end gap
   Out of specification → Replace the piston ring.

TIP

The oil ring expander’s end gap cannot be measured. If the oil ring rail’s gap is excessive, replace all three oil rings.

Piston ring end gap
Top ring
End gap (installed)
0.15–0.25 mm (0.0059–0.0098 in)
Limit
0.50 mm (0.0197 in)
Oil ring
End gap (installed)
0.10–0.35 mm (0.0039–0.0138 in)

CHECKING THE PISTON PIN

1. Check:
   - Piston pin
     Blue discoloration/grooves → Replace the piston pin and then check the lubrication system.
2. Measure:
   - Piston pin outside diameter “a”
     Out of specification → Replace the piston pin.

Piston pin outside diameter
15.991–16.000 mm (0.6296–0.6299 in)
Limit
15.971 mm (0.6288 in)

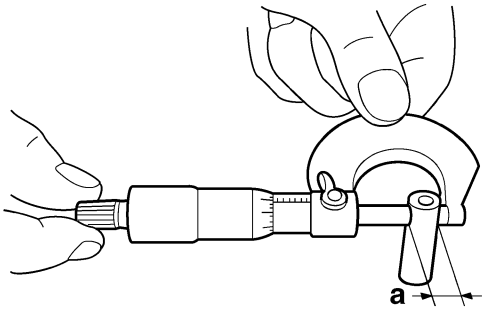

3. Measure:
   - Piston pin bore inside diameter “b”
     Out of specification → Replace the piston.

Piston pin bore inside diameter
16.002–16.013 mm (0.6300–0.6304 in)
Limit
16.043 mm (0.6316 in)

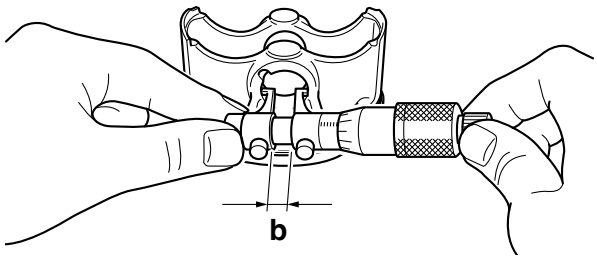

INSTALLING THE PISTON AND CYLINDER

1. Install:
   - Oil ring expander “1”
   - Lower oil ring rail “2”
   - Upper oil ring rail “3”
   - Top ring “4”

TIP

Be sure to install the piston ring so that the manufacturer’s marks or numbers face up.

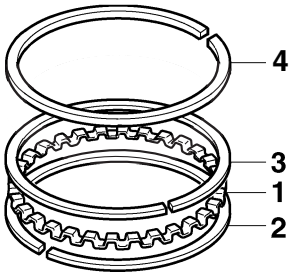

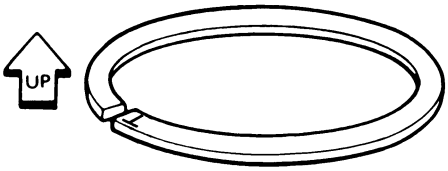

2. Install:
   - Piston “1”
   - Piston pin “2”
   - Piston pin clip “3” New

TIP

- Apply the engine oil to the piston pin.
- Install the piston with the F mark “a” on it pointing to its intake (front) side.
- Before installing the piston pin clip, cover the crankcase opening with a cloth to prevent the clip from falling into the crankcase.
- Install the piston pin clips, so that the clip ends are 3 mm (0.12 in) “c” or more from the cutout in the piston.

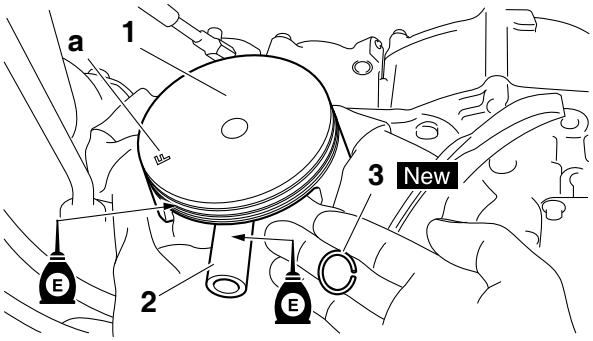

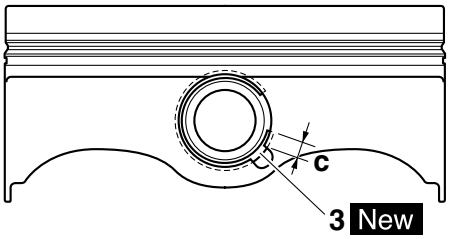

3. Lubricate:
   - Piston
   - Piston rings
   - Cylinder
4. Offset:
   - Piston ring end gap

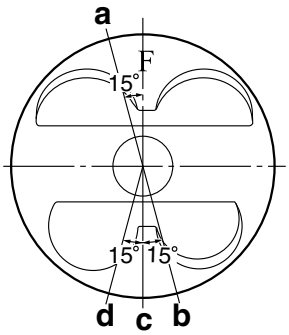

a. Top ring
b. Upper oil ring rail
c. Oil ring expander
d. Lower oil ring rail

5. Install:
   - Cylinder gasket New
   - Dowel pin
   - Cylinder

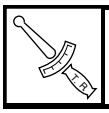	**Cylinder bolt** **10 Nm (1.0 m·kgf, 7.2 ft·lbf)**

TIP

- While compressing the piston rings with one hand, install the cylinder with the other hand.
- Pass the timing chain and timing chain guide (exhaust side) through the timing chain cavity.

ELECTRIC STARTER

Removing the starter motor

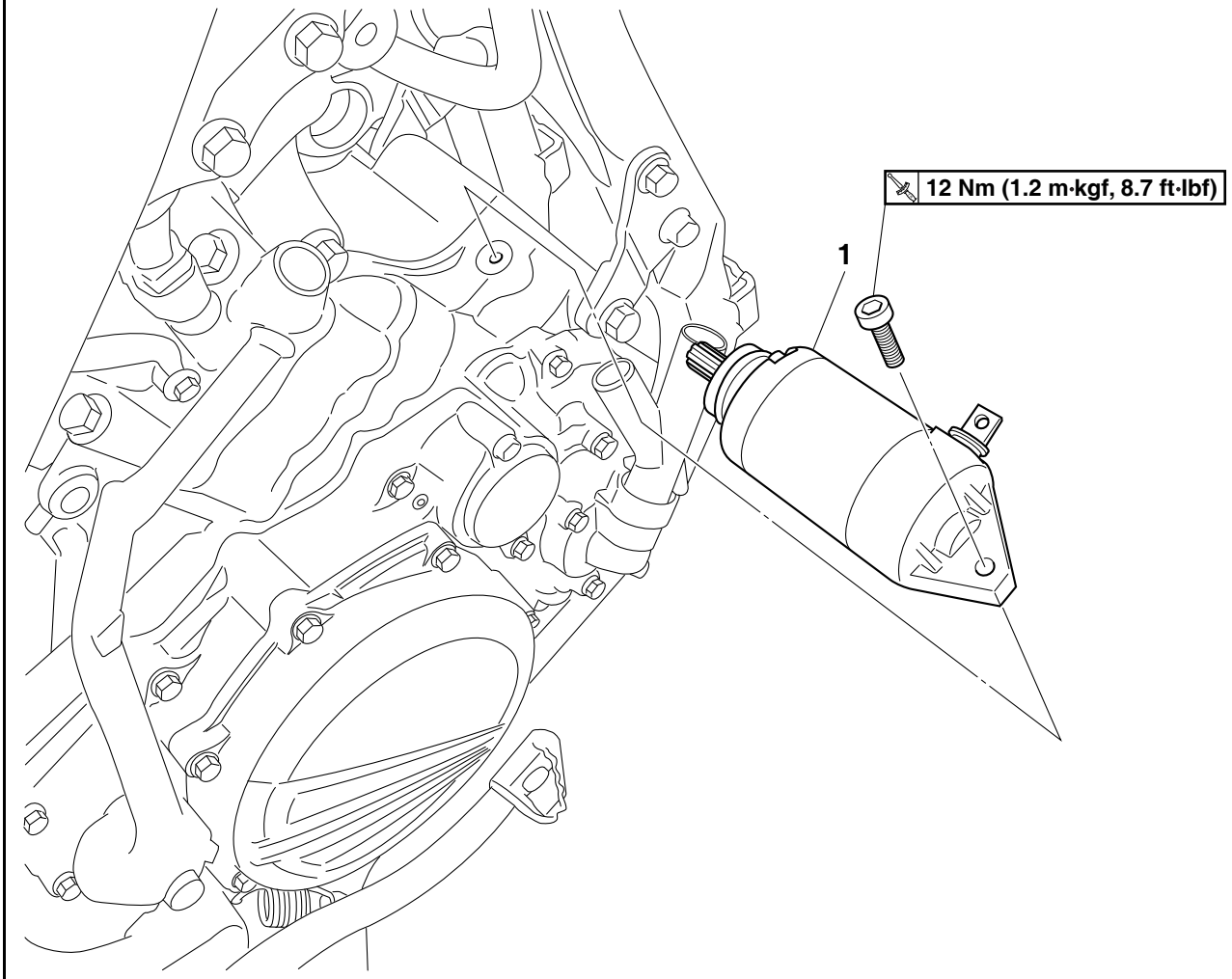

Order	Job/Parts to remove	Q'ty	Remarks
	Exhaust pipe		Refer to "ENGINE REMOVAL" on page 6-1.
1	Starter motor	1	
			For assembly, reverse the disassemble procedure.

Disassembling the starter motor

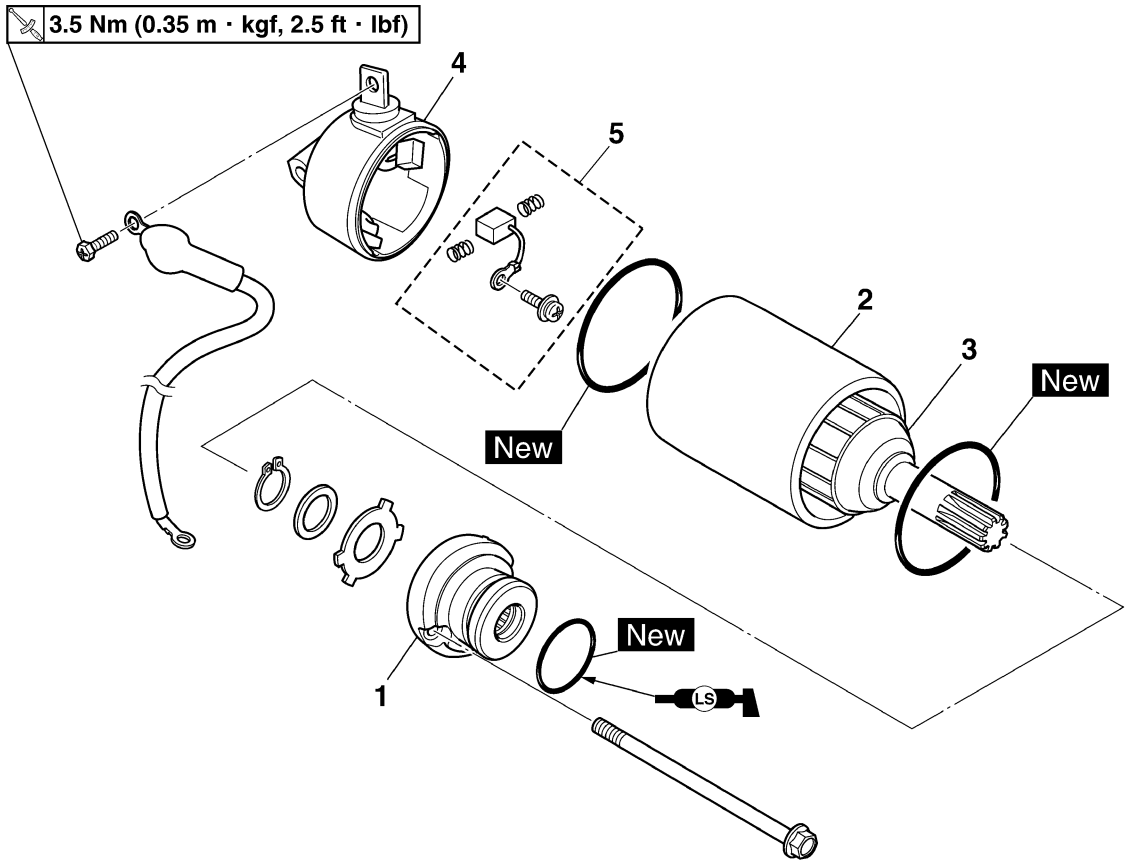

Order	Job/Parts to remove	Q'ty	Remarks
1	Starter motor front cover	1	
2	Starter motor yoke	1	
3	Armature assembly	1	
4	Starter motor rear cover	1	
5	Brush set	2	
			For assembly, reverse the disassembly procedure.

CHECKING THE STARTER MOTOR

1. Check:
   - Commutator
     Dirt → Clean with 600 grit sandpaper.
2. Measure:
   - Commutator diameter “a”
     Out of specification → Replace the starter motor.

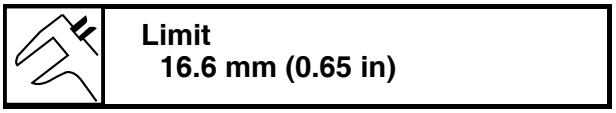

Limit
16.6 mm (0.65 in)

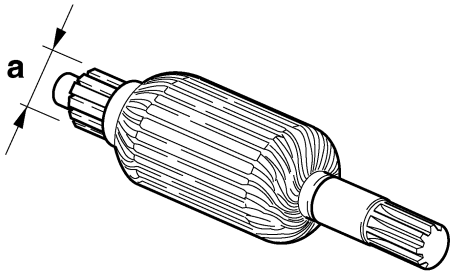

3. Measure:
   - Mica undercut “a”
     Out of specification → Scrape the mica to the proper measurement with a hacksaw blade that has been grounded to fit the commutator.

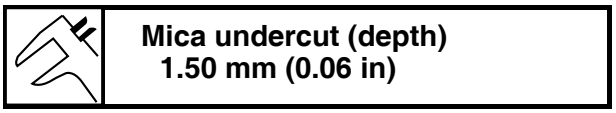

Mica undercut (depth)
1.50 mm (0.06 in)

TIP

The mica of the commutator must be undercut to ensure proper operation of the commutator.

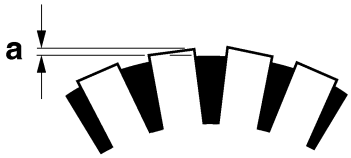

4. Measure:
   - Armature assembly resistances (commutator and insulation)
     Out of specification → Replace the starter motor.

▼▼▼▼▼▼▼▼▼▼▼▼▼▼▼▼▼▼▼▼▼▼▼▼▼▼▼▼▼▼▼▼▼▼

a. Measure the armature assembly resistances with the pocket tester.

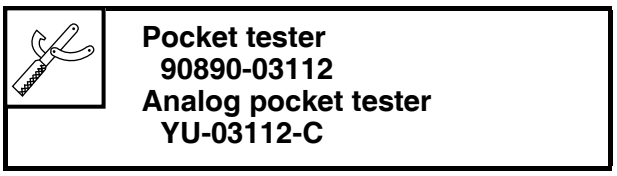

Pocket tester
90890-03112
Analog pocket tester
YU-03112-C

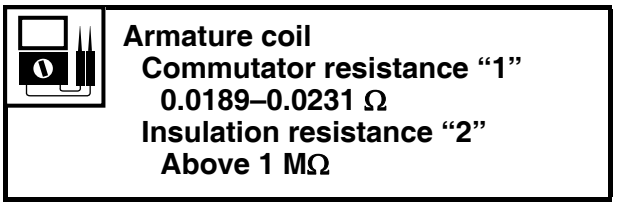

Armature coil
Commutator resistance “1”
0.0189–0.0231 Ω
Insulation resistance “2”
Above 1 MΩ

b. If any resistance is out of specification, replace the starter motor.

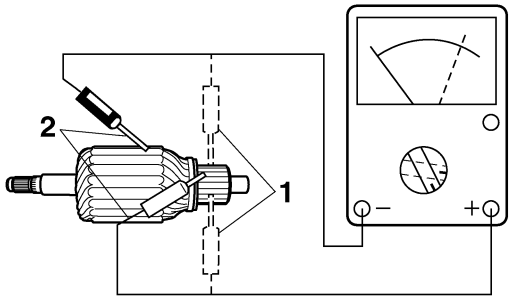

▲▲▲▲▲▲▲▲▲▲▲▲▲▲▲▲▲▲▲▲▲▲▲▲▲▲▲▲▲▲▲▲▲▲

5. Measure:
   - Brush length “a”
     Out of specification → Replace the brush set.

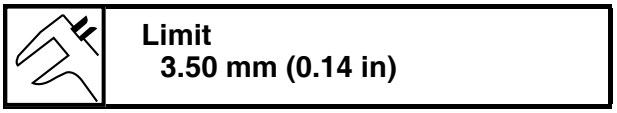

Limit
3.50 mm (0.14 in)

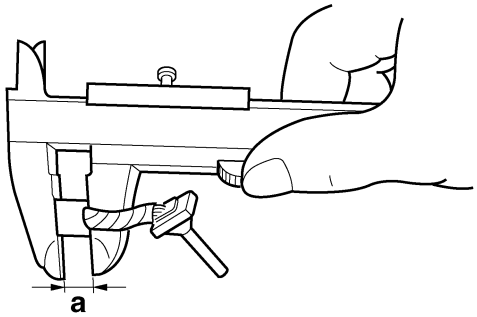

6. Measure:
   - Brush spring force
     Out of specification → Replace the brush set.

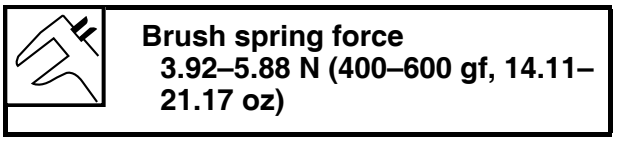

Brush spring force
3.92–5.88 N (400–600 gf, 14.11–21.17 oz)

7. Check:
   - Gear teeth
     Damage/wear → Replace the starter motor.
8. Check:
   - Oil seal
     Damage/wear → Replace the defective part (s).

ASSEMBLING THE STARTER MOTOR

1. Install:
   - Brush spring “1”
   - Brush “2”

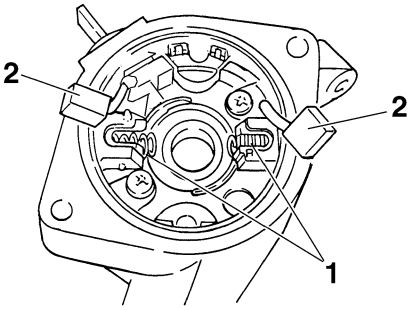

2. Install:
   - Armature assembly “1”
     Install while holding down the brush using a thin screw driver.

NOTICE

Be careful not to damage the brush during installation.

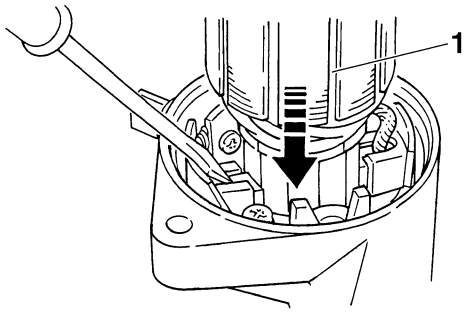

3. Install:
   - O-ring “1” New
   - Starter motor yoke “2”

NOTICE

Install the part that has a smaller step difference “a” with the magnet of the starter motor yoke facing the starter motor front cover.

TIP

Align the match mark “a” on the starter motor yoke with the match mark “b” on the starter motor rear cover.

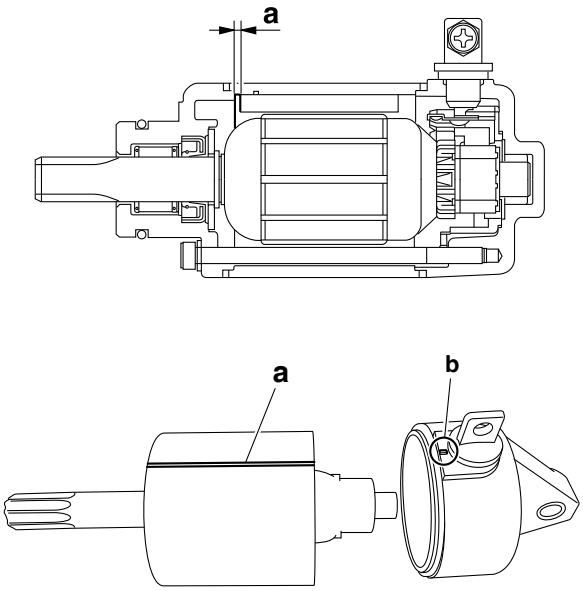

4. Install:
   - Circlip
   - Plain washer “1”
   - O-ring “2” New
   - Washer (starter motor front cover) “3”
   - Starter motor front cover “4”

TIP

- For installation, align the projections on the washer with the slots in the front cover.
- Align the match mark “a” on the starter motor yoke with the match mark “b” on the starter motor front cover.

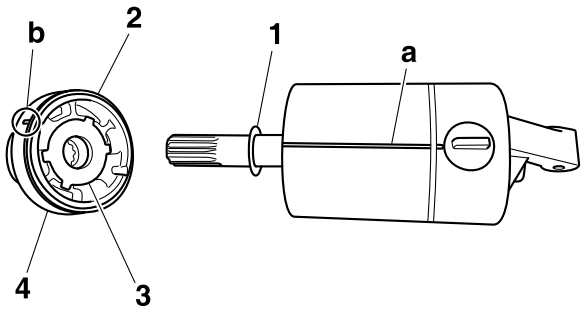

5. Install:
   - Bolt “1”
   - O-ring “2” New

TIP

Apply the lithium-soap-based grease on the O-ring.

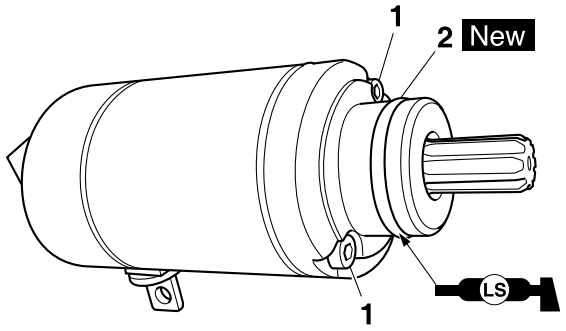

CLUTCH

Removing the clutch

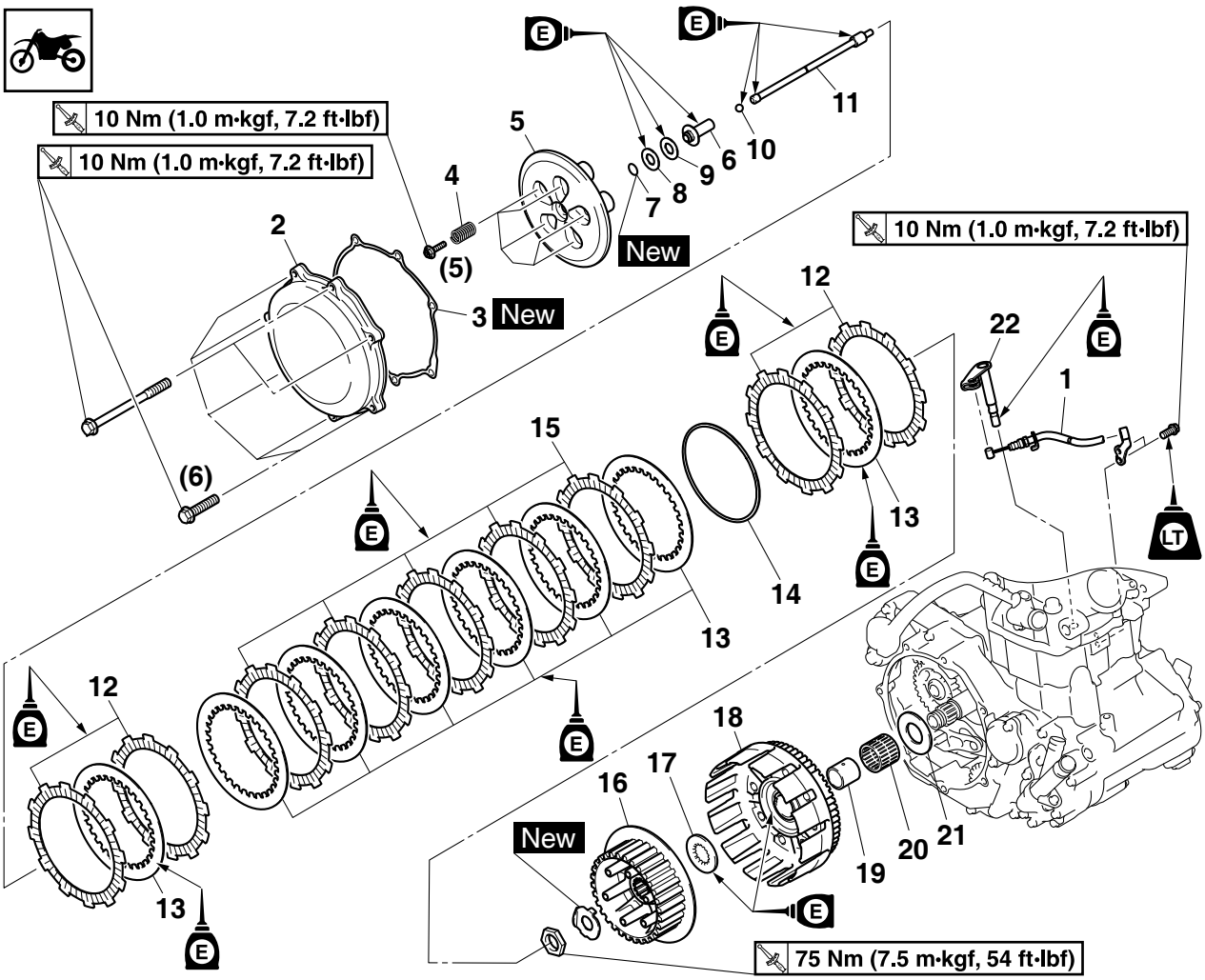

Order	Part name	Q'ty	Remarks
	Engine oil		Drain. Refer to "CHANGING THE ENGINE OIL" on page 3-17.
	Brake pedal		Refer to "ENGINE REMOVAL" on page 6-1.
1	Clutch cable	1	Disconnect.
2	Clutch cover	1	
3	Gasket	1	
4	Clutch spring	5	
5	Pressure plate	1	
6	Push rod 1	1	
7	Circlip	1	
8	Washer	1	
9	Bearing	1	
10	Ball	1	
11	Push rod 2	1	
12	Friction plate 1	4	
13	Clutch plate	8	

Removing the clutch

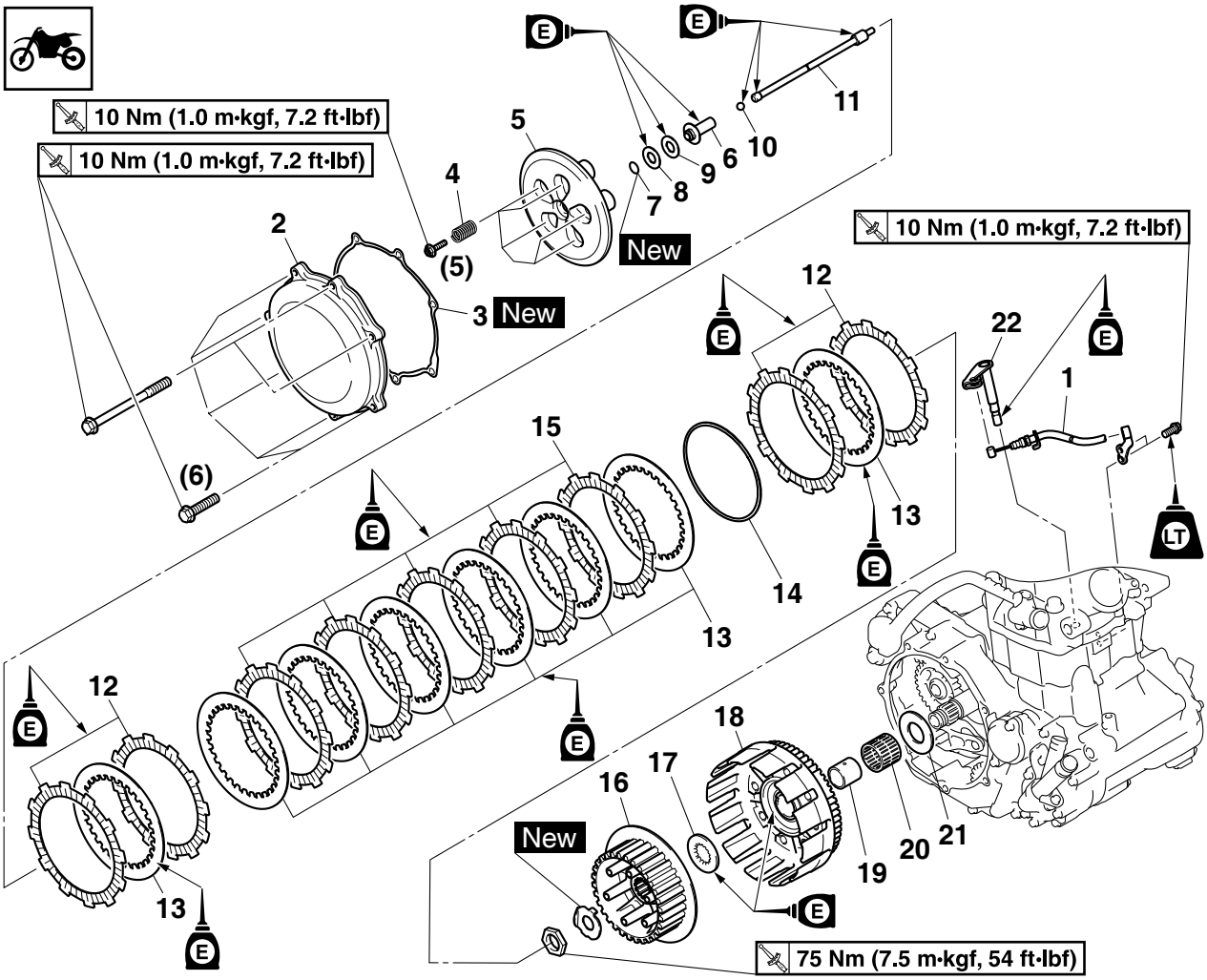

Order	Part name	Q'ty	Remarks
14	Cushion spring	1	
15	Friction plate 2	5	Identification color (purple)
16	Clutch boss	1	
17	Thrust washer	1	
18	Primary driven gear	1	
19	Spacer	1	
20	Bearing	1	
21	Washer	1	
22	Push lever shaft	1	
			For installation, reverse the removal procedure.

Removing the right crankcase cover

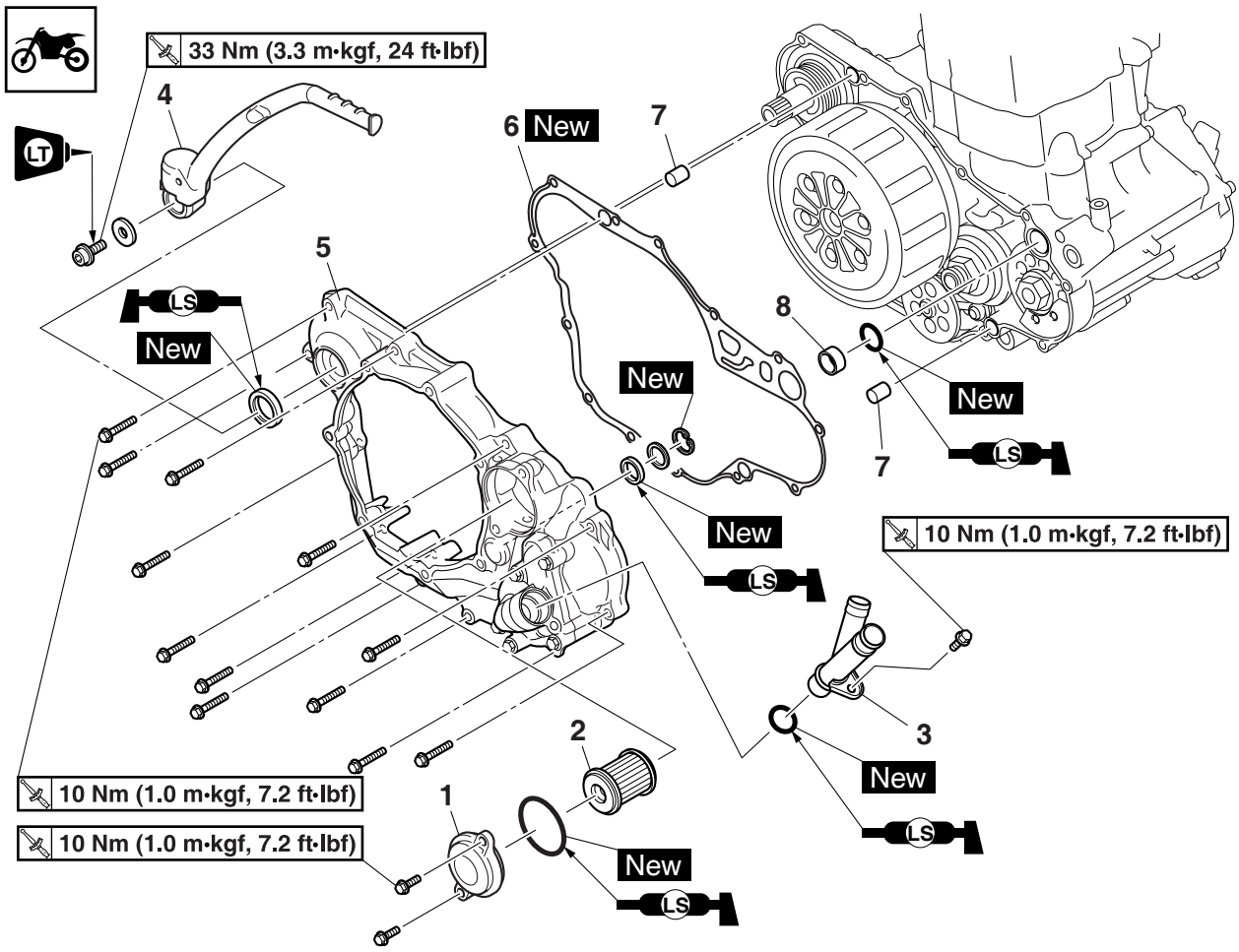

Order	Part name	Q'ty	Remarks
	Engine guard		Refer to "ENGINE REMOVAL" on page 6-1.
	Engine oil		Drain. Refer to "CHANGING THE ENGINE OIL" on page 3-17.
	Coolant		Drain. Refer to "CHANGING THE COOLANT" on page 3-10.
	Brake pedal		Refer to "ENGINE REMOVAL" on page 6-1.
	Clutch cover		Refer to "CLUTCH" on page 6-40.
1	Oil filter element cover	1	
2	Oil filter element	1	
3	Radiator pipe 2	1	
4	Kickstarter lever	1	
5	Right crankcase cover	1	
6	Gaskets	1	
7	Dowel pin	2	
8	Collar	1	
			For installation, reverse the removal procedure.

REMOVING THE CLUTCH

1. Remove:
   - Clutch boss nut “1”
   - Lock washer “2”
   - Clutch boss “3”

TIP

- Straighten the lock washer tab.
- While holding the clutch boss with the clutch holder “4”, loosen the clutch boss nut.

Universal clutch holder
90890-04086
Universal clutch holder
YM-91042

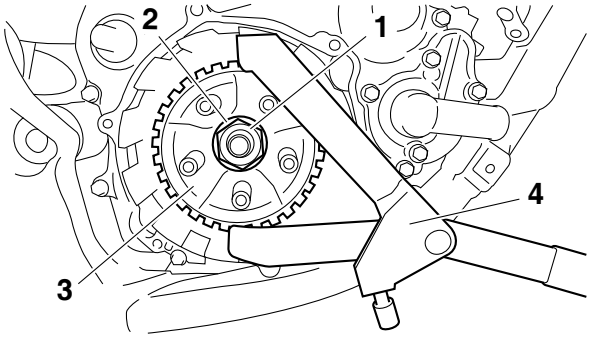

CHECKING THE FRICTION PLATES

1. Check:
   - Friction plate
     Damage/wear → Replace the friction plates as a set.
2. Measure:
   - Friction plate thickness
     Out of specification → Replace the friction plates as a set.

TIP

Measure it at four points on the friction plate.

Friction plate thickness
2.90–3.10 mm (0.114–0.122 in)
Wear limit
2.85 mm (0.112 in)

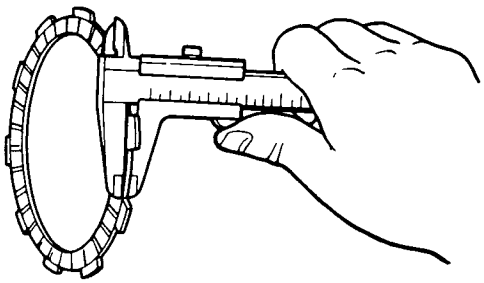

CHECKING THE CLUTCH PLATES

1. Check:
   - Clutch plate
     Damage → Replace the clutch plates as a set.
2. Measure:
   - Clutch plate warpage
     (with a surface plate and thickness gauge “1”)
     Out of specification → Replace the clutch plates as a set.

Warpage limit
0.10 mm (0.004 in)

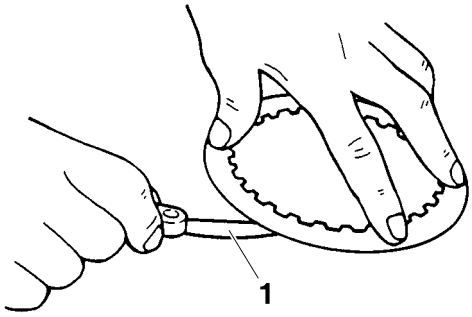

CHECKING THE CLUTCH SPRINGS

1. Check:
   - Clutch spring
     Damage → Replace the clutch springs as a set.
2. Measure:
   - Clutch spring free length
     Out of specification → Replace the clutch springs as a set.

Clutch spring free length
47.80 mm (1.88 in)
Limit
46.80 mm (1.84 in)

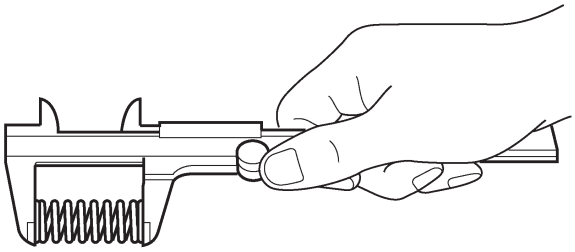

I1412901

CHECKING THE CLUTCH HOUSING

1. Check:
   - Clutch housing dogs “a”
     Damage/pitting/wear → Deburr the clutch housing dogs or replace the clutch housing.

TIP

Pitting on the clutch housing dogs will cause erratic clutch operation.

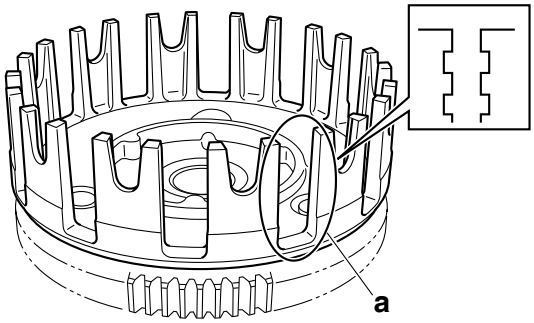

CHECKING THE CLUTCH BOSS

1. Check:
   - Clutch boss splines
     Damage/pitting/wear → Replace the clutch boss.

TIP

Pitting on the clutch boss splines will cause erratic clutch operation.

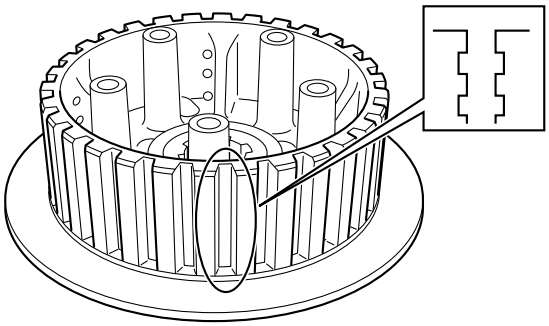

CHECKING THE PRESSURE PLATE

1. Check:
   - Pressure plate
     Crack/damage → Replace.

CHECKING THE PUSH LEVER SHAFT

1. Check:
   - Push lever shaft
     Wear/damage → Replace.

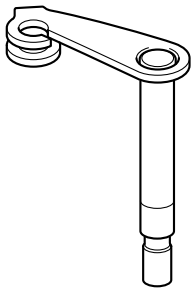

CHECKING THE CLUTCH PUSH RODS

1. Check:
   - Push rod 1 “1”
   - Bearing “2”
   - Washer “3”
   - Push rod 2 “4”
   - Ball “5”
     Cracks/damage/wear → Replace.

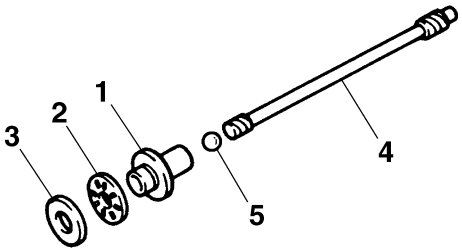

2. Measure:
   - Push rod 2 bending limit
     Out of specification → Replace.

	**Push rod bending limit** **0.10 mm (0.004 in)**

CHECKING THE PRIMARY DRIVE GEAR

1. Check:
   - Primary drive gear
     Damage/wear → Replace the primary drive and primary driven gears as a set.
     Excessive noise during operation → Replace the primary drive and primary driven gears as a set.
2. Check:
   - Primary-drive-gear-to-primary-driven-gear free play
     Free play exists → Replace the primary drive and primary driven gears as a set.

CHECKING THE PRIMARY DRIVEN GEAR

1. Check:
   - Primary driven gear
     Damage/wear → Replace the primary drive and primary driven gears as a set.
     Excessive noise during operation → Replace the primary drive and primary driven gears as a set.

INSTALLING THE OIL SEAL

1. Install:
   - Oil seal “1” New
   - Washer “2”
   - Circlip “3” New

TIP

- Apply the lithium-soap-based grease on the oil seal lip.
- Install the oil seal in parallel with its manufacture's marks or numbers facing inward.

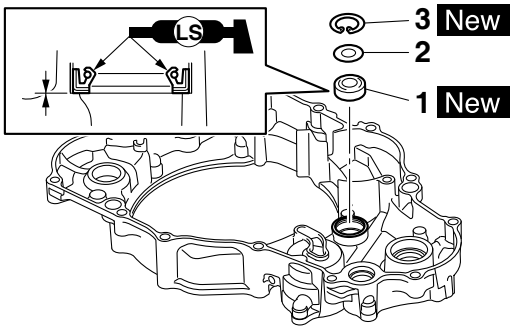

INSTALLING THE RIGHT CRANKCASE COVER

1. Install:
   - Dowel pin “1”
   - O-ring “2” New
   - Collar “3”
   - Gasket “4” New

TIP

Apply the lithium-soap-based grease on the O-ring.

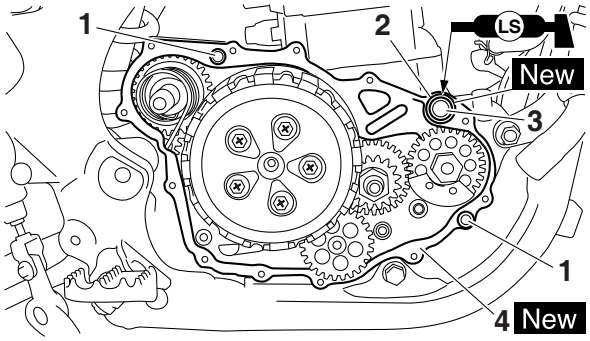

2. Install:
   - Right crankcase cover “1”
   - Right crankcase cover bolt “2”

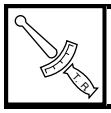	**Right crankcase cover bolt 10 Nm (1.0 m·kgf, 7.2 ft·lbf)**

TIP

- Apply the engine oil on the impeller shaft end.
- Mesh the impeller shaft gear “3” with primary drive gear “4”.
- Tighten the right crankcase cover bolts in stages and in a crisscross pattern.

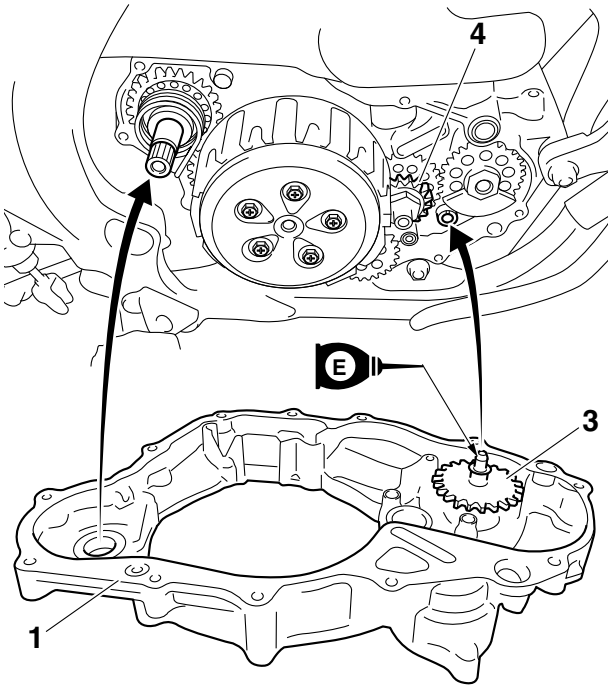

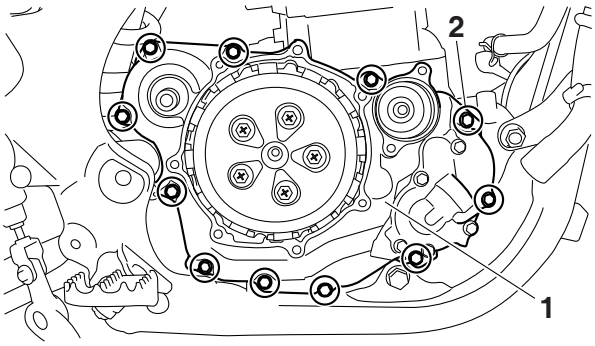

INSTALLING THE CLUTCH

1. Install:
   - Push lever shaft “1”

TIP

- Apply the lithium-soap-based grease on the oil seal lip.
- Before installation, apply the engine oil to the push lever shaft sliding surface.

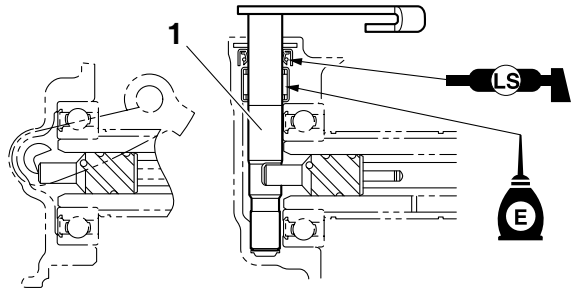

2. Install:
   - Washer “1”
   - Bearing “2”
   - Collar “3”
   - Primary driven gear “4”
   - Thrust washer “5”
   - Clutch boss “6”

TIP

Apply the engine oil on the primary driven gear inner circumference.

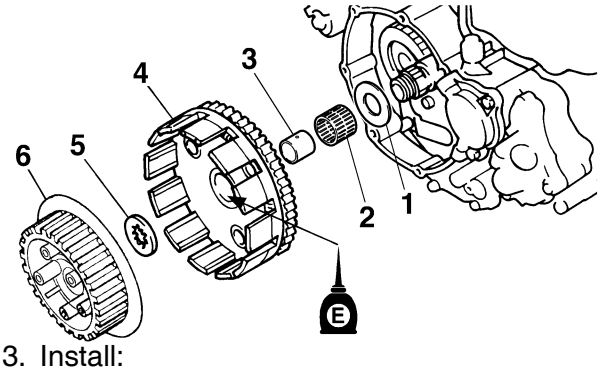

3. Install:
   - Lock washer “1” New
   - Clutch boss nut “2”

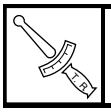	**Clutch boss nut** **75 Nm (7.5 m·kgf, 54 ft·lbf)**

NOTICE

Make sure to tighten to specification; otherwise, it may damage the other part that is fastened together.

TIP

Use the clutch holding tool “3” to hold the clutch boss.

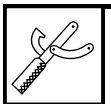	**Universal clutch holder** **90890-04086** **Universal clutch holder** **YM-91042**

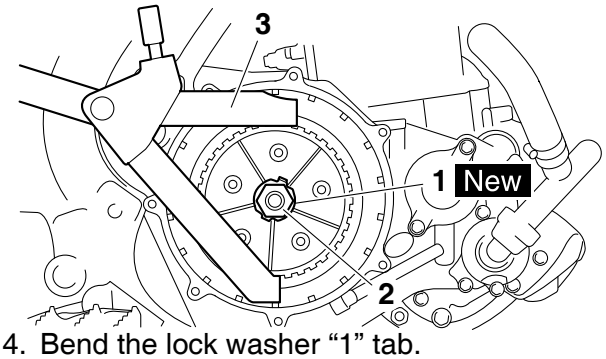

4. Bend the lock washer “1” tab.

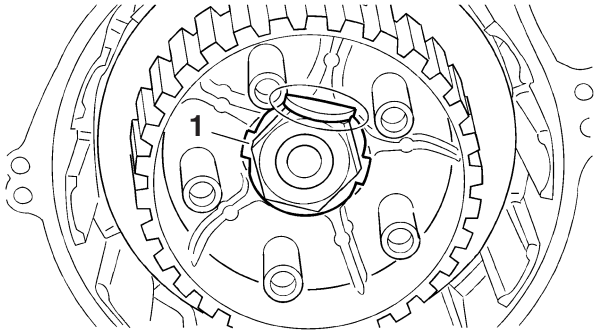

5. Install:
   - Friction plate 1 “1”
   - Clutch plate “2”
   - Cushion spring “3”
   - Friction plate 2 “4”

TIP

- Install the clutch plates and friction plates alternately on the clutch boss, starting with a friction plate and ending with a friction plate.
- Install the cushion spring “3” in the position as shown.
- From the clutch boss side, install the friction plates in order: friction plate 1 × 2, friction plate 2 (identification color: purple) × 5, and friction plate 1 × 2.
- Apply the engine oil on the friction plates and clutch plates.

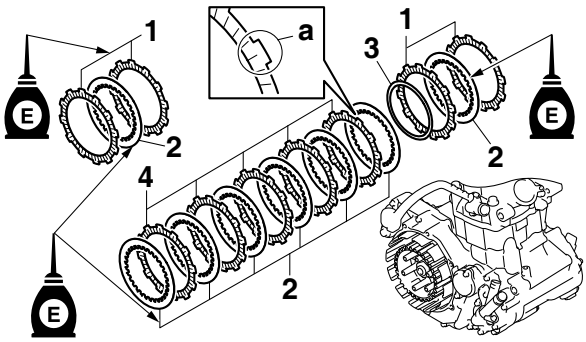

a. Identification color

6. Install:
   - Bearing “1”
   - Washer “2”
   - Circlip “3” New
     To push rod 1 “4”.

TIP

Apply the engine oil on the bearing and washer.

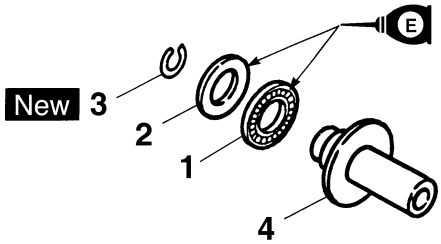

7. Install:
   - Push rod 2 “1”
   - Ball “2”
   - Push rod 1 “3”

TIP

Apply the engine oil on the push rod 1, 2 and ball.

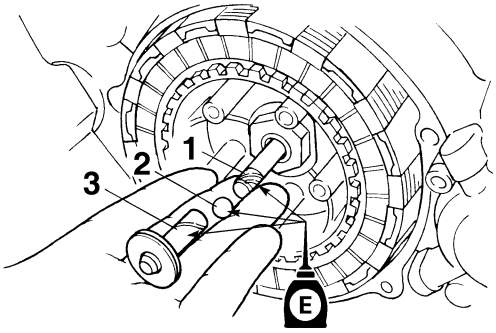

8. Install:
   - Pressure plate “1”

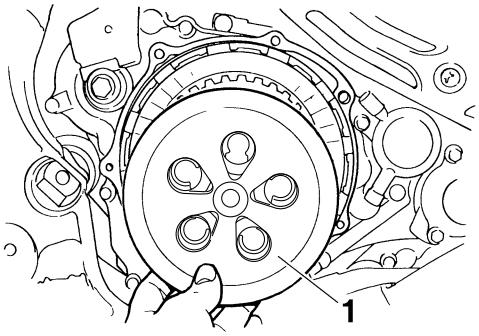

9. Install:
   - Clutch spring
   - Clutch spring bolt

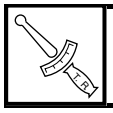

Clutch spring bolt
10 Nm (1.0 m·kgf, 7.2 ft·lbf)

TIP

Tighten the bolts in stages and in a crisscross pattern.

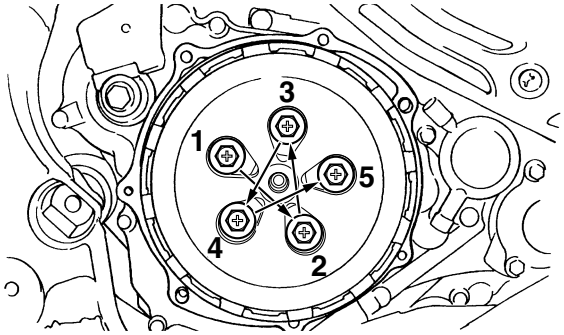

10. Install:
    - Gasket “1” New

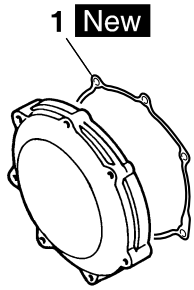

11. Install:
    - Clutch cover “1”
    - Clutch cover bolt

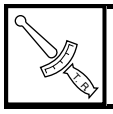

Clutch cover bolt
10 Nm (1.0 m·kgf, 7.2 ft·lbf)

TIP

Tighten the bolts in stages and in a crisscross pattern.

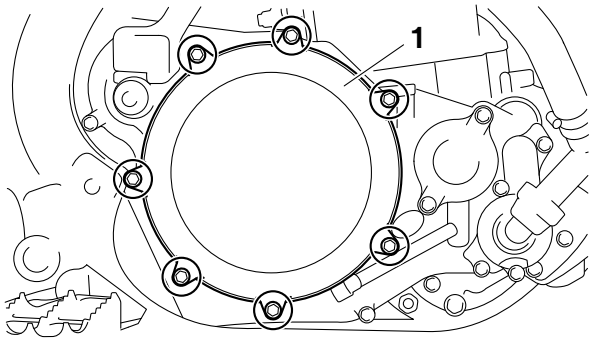

INSTALLING THE KICKSTARTER LEVER

1. Install:
   - Kickstarter lever “1”
   - Washer
   - Bolt (kickstarter lever)

	**Bolt (kickstarter lever)** **33 Nm (3.3 m·kgf, 24 ft·lbf)** **LOCTITE®**

TIP

Install so that there is a clearance “a” of 5 mm (0.2 in) or more between the kickstarter lever and the frame and that the kickstarter lever does not contact the right crankcase cover when it is pulled.

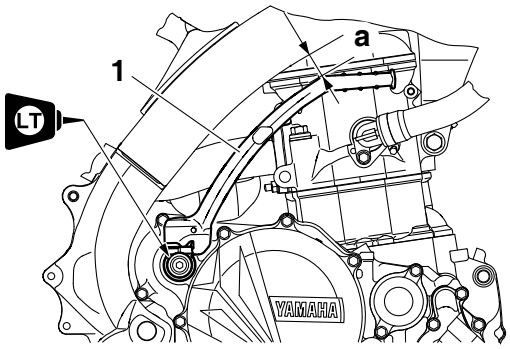

KICKSTATER

Removing the kick shaft

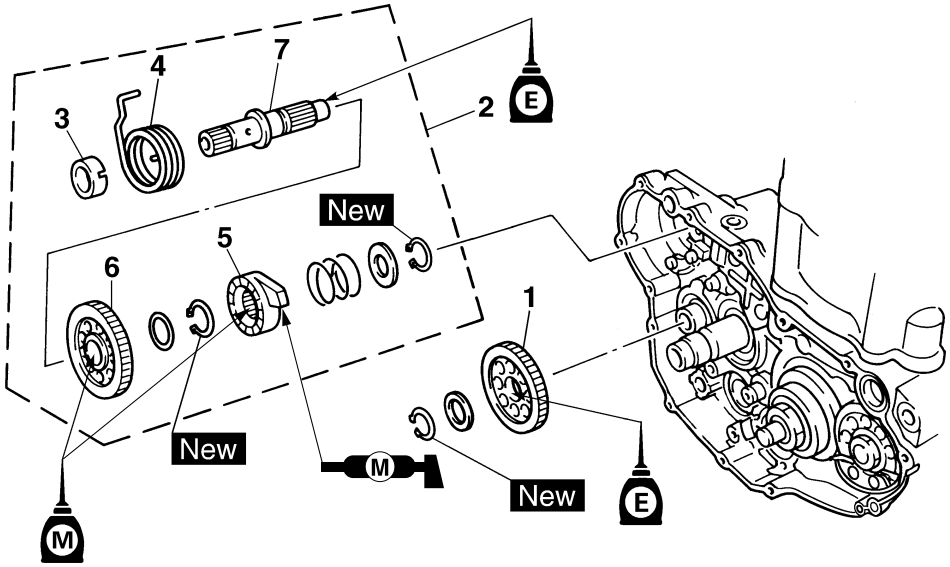

Order	Part name	Q'ty	Remarks
	Primary driven gear		Refer to "CLUTCH" on page 6-40.
1	Kick idle gear	1	
2	Kick shaft assembly	1	
3	Spring guide	1	
4	Torsion spring	1	
5	Ratchet wheel	1	
6	Kick gear	1	
7	Kick shaft	1	
			For installation, reverse the removal procedure.

REMOVING THE KICK SHAFT ASSEMBLY

1. Remove:
   - Kick shaft assembly “1”

TIP

Unhook the torsion spring “2” from the hole “a” in the crankcase.

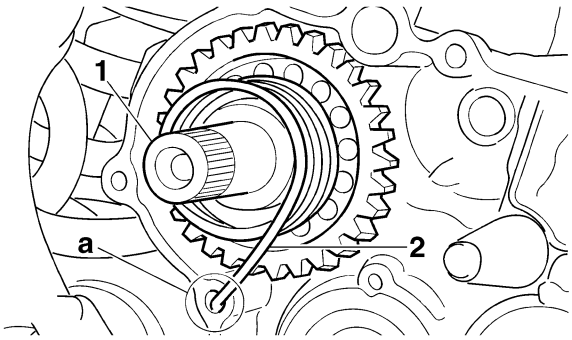

CHECKING THE KICK SHAFT AND RATCHET WHEEL

1. Check:
   - Ratchet wheel “1” smooth movement
     Unsmooth movement → Replace.
   - Kick shaft “2”
     Wear/damage → Replace the kick shaft assembly.
   - Spring “3”
     Broken → Replace.

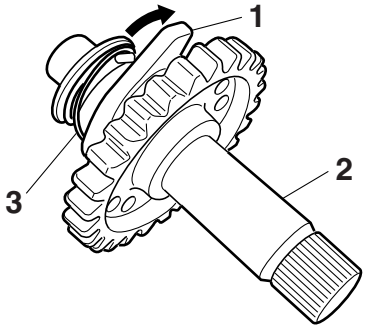

CHECKING THE KICK GEAR, KICK IDLE GEAR AND RATCHET WHEEL

1. Check:
   - Kick gear “1”
     Wear/damage → Replace the kick shaft assembly.
   - Kick idle gear “2”
   - Ratchet wheel “3”
   - Gear teeth “a”
   - Ratchet teeth “b”
     Wear/damage → Replace.

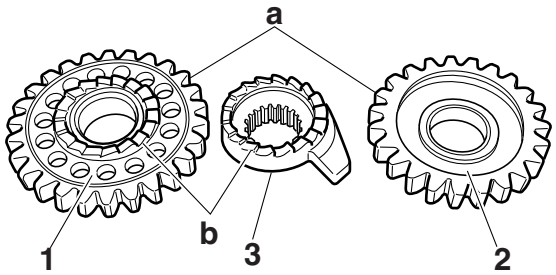

INSTALLING THE KICK SHAFT ASSEMBLY

1. Install:
   - Kick gear “1”
   - Washer “2”
   - Circlip “3” New
   - Ratchet wheel “4”
   - Spring “5”
   - Washer “6”
   - Circlip “7” New
     (to the kick shaft “8”)

TIP

- Apply molybdenum disulfide oil to the inner circumferences of the kick gear and ratchet wheel.
- Align the punch mark “a” on the ratchet wheel with the punch mark “b” on the kick shaft.

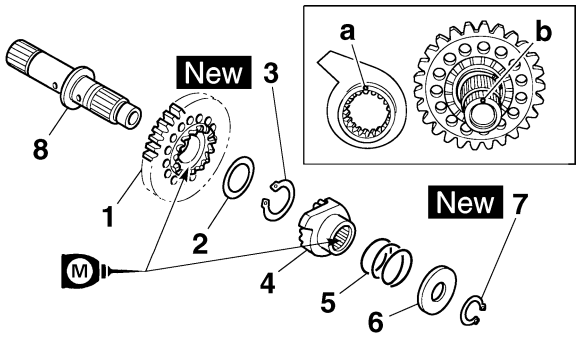

2. Install:
   - Torsion spring “1”
     (to the kick shaft “2”)

TIP

Make sure the stopper “a” of the torsion spring fits into the hole “b” on the kick shaft.

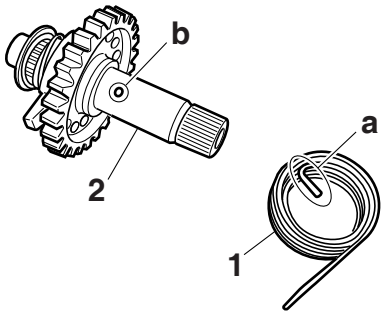

3. Install:
   - Spring guide “1”

TIP

Slide the spring guide into the kick shaft, make sure the groove “a” in the spring guide fits on the stopper of the torsion spring.

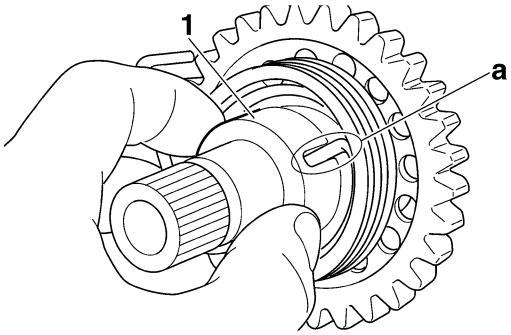

4. Install:
   - Kick shaft assembly “1”

TIP

- Before installation, apply molybdenum disulfide grease to the contacting surfaces of the kick shaft ratchet wheel guide “2” and the kick shaft stopper “a”.
- Apply the engine oil on the kick shaft.
- Slide the kick shaft assembly into the crankcase and make sure the kick shaft stopper “a” fits into the kick shaft ratchet wheel guide.

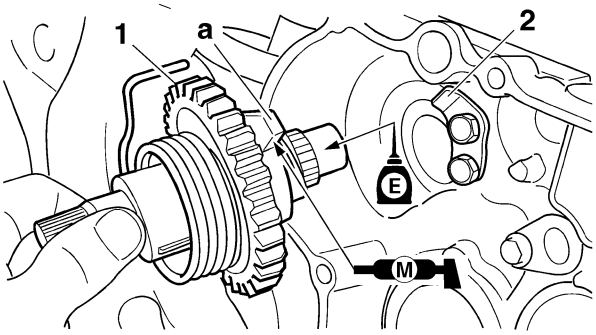

5. Install:
   - Torsion spring “1”

TIP

Turn the torsion spring clockwise and hook into the proper hole “a” in the crankcase.

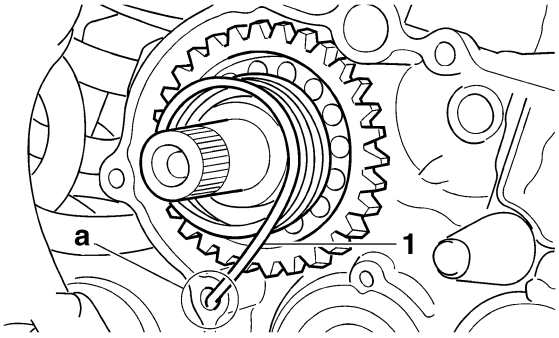

INSTALLING THE KICK IDLE GEAR

1. Install:
   - Kick idle gear “1”
   - Washer “2”
   - Circlip “3” New

TIP

- Apply the engine oil on the kick idle gear inner circumference.
- Install the kick idle gear with its depressed side “a” toward you.

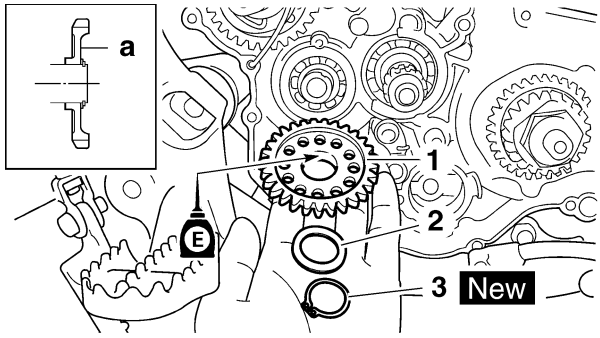

SHIFT SHAFT

Removing the shift shaft and stopper lever

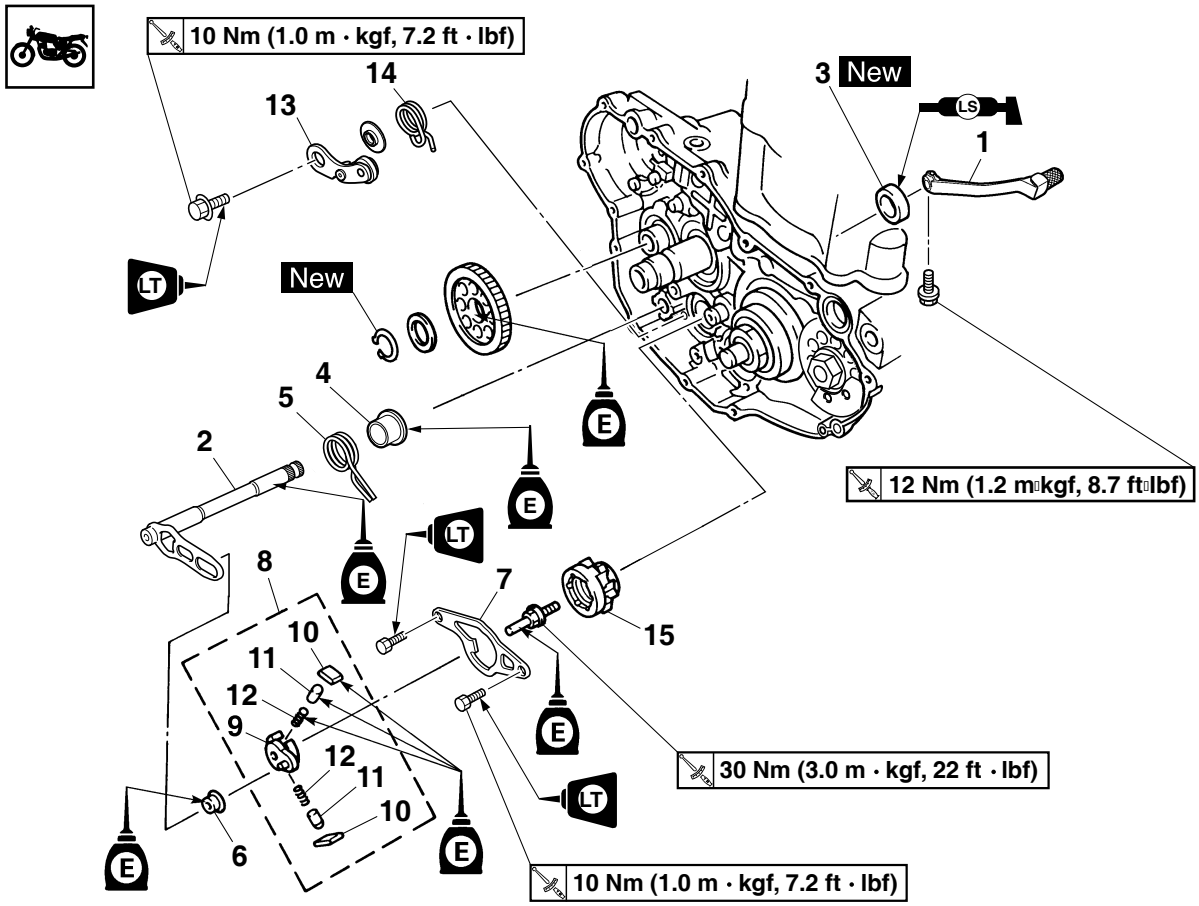

Order	Part name	Q'ty	Remarks
	Primary driven gear		Refer to "CLUTCH" on page 6-40.
1	Shift pedal	1	
2	Shift shaft	1	
3	Oil seal	1	
4	Collar	1	
5	Shift shaft spring	1	
6	Roller	1	
7	Shift guide	1	
8	Shift lever assembly	1	
9	Shift lever	1	
10	Pawl	2	
11	Pawl pin	2	
12	Spring	2	
13	Stopper lever	1	
14	Stopper lever spring	1	
15	Segment	1	
			For installation, reverse the removal procedure.

REMOVING THE SHIFT GUIDE AND SHIFT LEVER ASSEMBLY

1. Remove:
   - Bolt (shift guide)
   - Shift guide “1”
   - Shift lever assembly “2”

TIP

Make sure that the shift lever assembly is removed together with the shift guide.

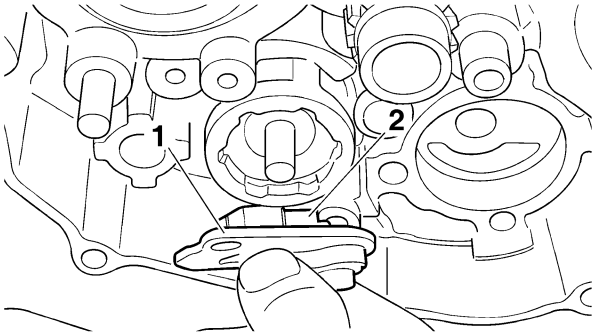

REMOVING THE SEGMENT

1. Remove:
   - Bolt (segment) “1”
   - Segment “2”

TIP

Turn the segment counterclockwise until it stops and loosen the bolt.

NOTICE

If the segment gets an impact, the stopper lever may be damaged. Take care not to give an impact to it when removing the bolt.

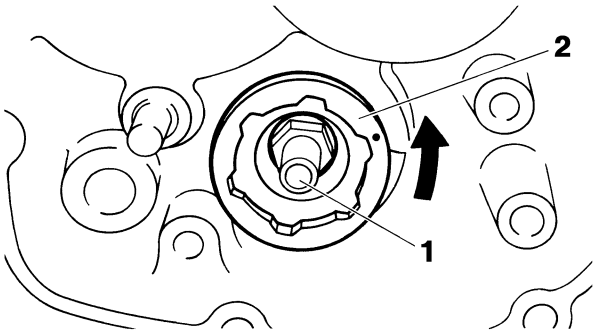

CHECKING THE SHIFT SHAFT

1. Check:
   - Shift shaft “1”
     Bends/damage/wear → Replace.
   - Shift shaft spring “2”
     Damage/wear → Replace.

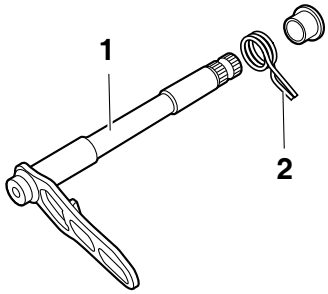

CHECKING THE SHIFT GUIDE AND SHIFT LEVER ASSEMBLY

1. Check:
   - Shift guide “1”
   - Shift lever “2”
   - Pawl “3”
   - Pawl pin “4”
   - Spring “5”
     Wear/damage → Replace.

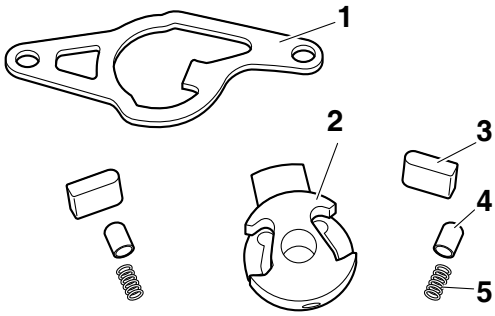

CHECKING THE STOPPER LEVER

1. Check:
   - Stopper lever “1”
     Wear/damage → Replace.
   - Torsion spring “2”
     Broken → Replace.

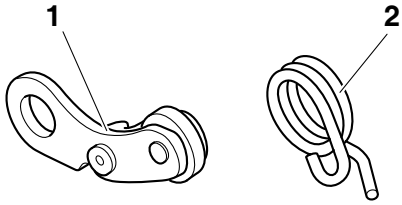

INSTALLING THE STOPPER LEVER

1. Install:
   - Torsion spring “1”
   - Collar “2”
   - Stopper lever “3”
   - Bolt (stopper lever) “4”

	**Bolt (stopper lever)** **10 Nm (1.0 m·kgf, 7.2 ft·lbf)** **LOCTITE®**

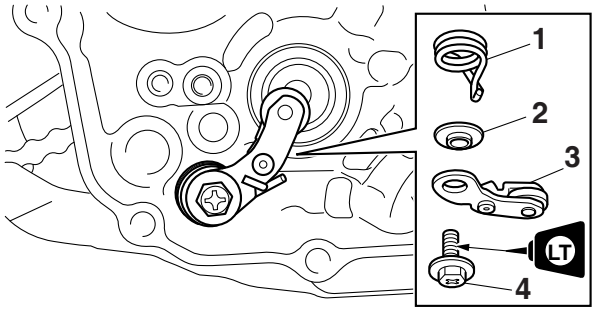

INSTALLING THE SEGMENT

1. Install:
   - Segment “1”
   - Segment bolt

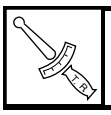	**Segment bolt** **30 Nm (3.0 m·kgf, 22 ft·lbf)**

TIP

- Align the notch “a” on the segment with the pin “b” on the shift cam.
- With the stopper lever pushed down, install the segment.

NOTICE

If the segment gets an impact, the stopper lever may be damaged. Take care not to give an impact to it when tightening the bolt.

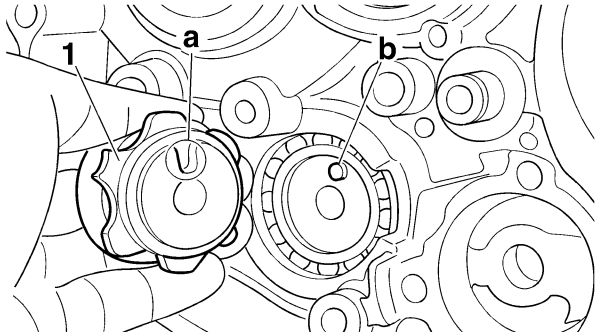

INSTALLING THE SHIFT GUIDE AND SHIFT LEVER ASSEMBLY

1. Install:
   - Spring “1”
   - Pawl pin “2”
   - Pawl “3”
     (to the shift lever “4”)

TIP

Apply the engine oil on the spring, pawl pin and pawl.

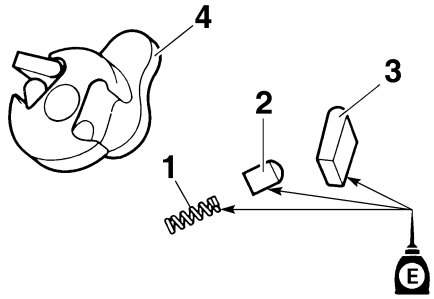

2. Install:
   - Shift lever assembly “1”
     (to the shift guide “2”)

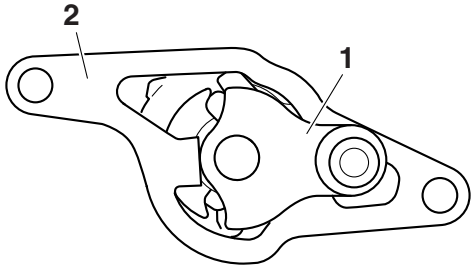

3. Install:
   - Shift lever assembly “1”
   - Shift guide “2”

TIP

- The shift lever assembly is installed at the same time as the shift guide.
- Apply the engine oil on the segment bolt shaft.

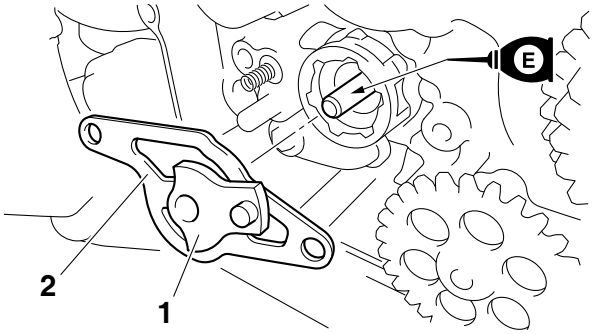

4. Tighten:
   • Shift guide bolt “1”

	Shift guide bolt **10 Nm (1.0 m·kgf, 7.2 ft·lbf)** **LOCTITE®**

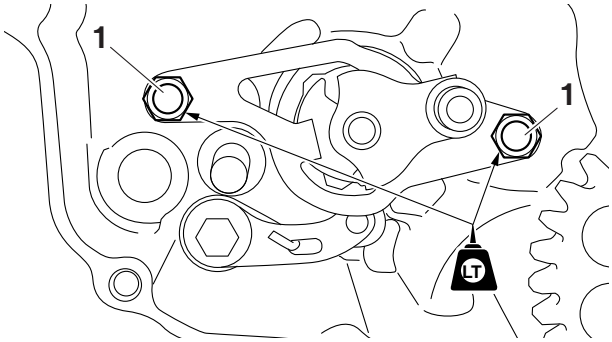

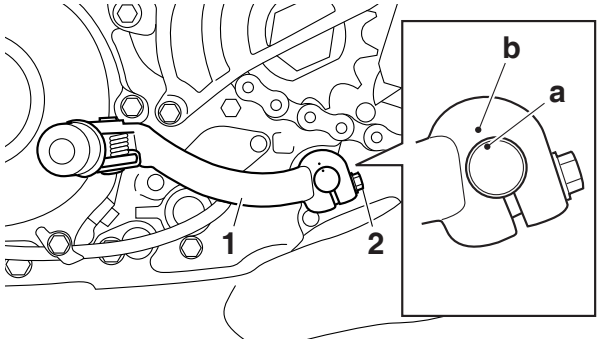

INSTALLING THE SHIFT SHAFT

1. Install:
   • Roller “1”
   • Shift haft spring “2” (to shift shaft)
   • Collar “3” (to shift shaft)
   • Shift shaft “4”

TIP

Apply the engine oil on the roller, collar and shift shaft.

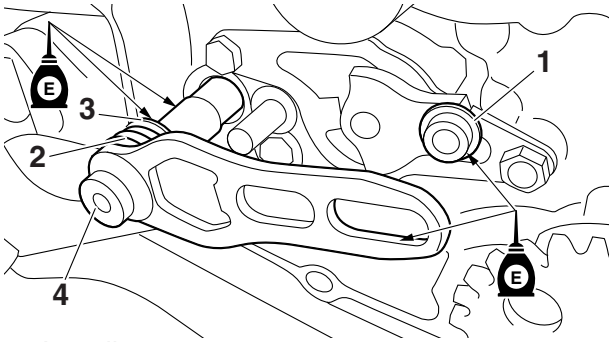

2. Install:
   • Oil seal New

INSTALLING THE SHIFT PEDAL

1. Install:
   • Shift pedal “1”
   • Shift pedal bolt “2”

	Shift pedal bolt **12 Nm (1.2 m·kgf, 8.7 ft·lbf)**

TIP

Align the punch mark “a” on the shift shaft with the punch mark “b” in the shift pedal.

OIL PUMP AND BALANCER GEAR

Removing the oil pump

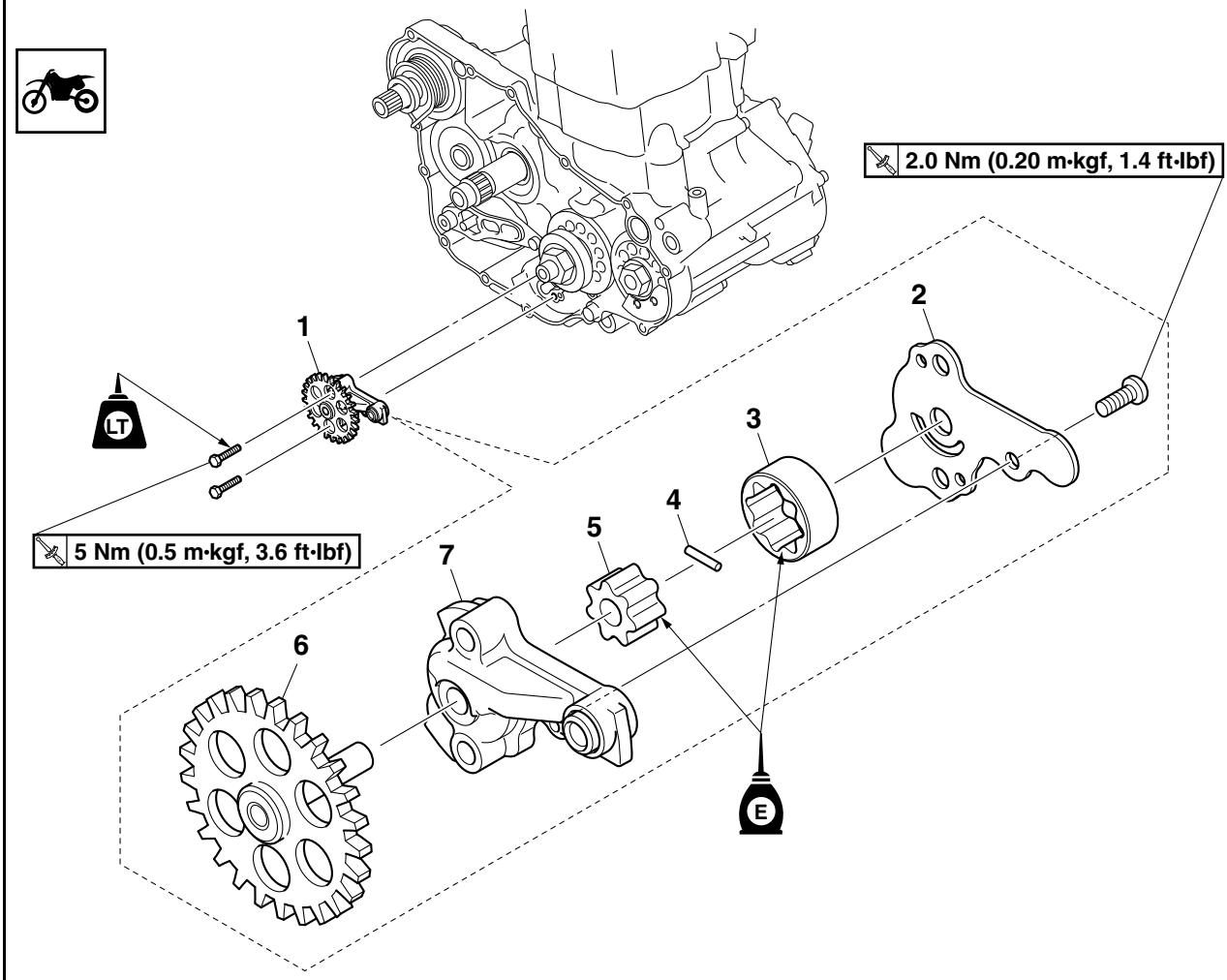

Order	Part name	Q'ty	Remarks
	Primary driven gear		Refer to "CLUTCH" on page 6-40.
	Right crankcase cover		Refer to "CLUTCH" on page 6-40.
1	Oil pump assembly	1	
2	Oil pump cover	1	
3	Outer rotor	1	
4	Dowel pin	1	
5	Inner rotor	1	
6	Oil pump drive shaft	1	
7	Rotor housing	1	
			For installation, reverse the removal procedure.

Removing the balancer

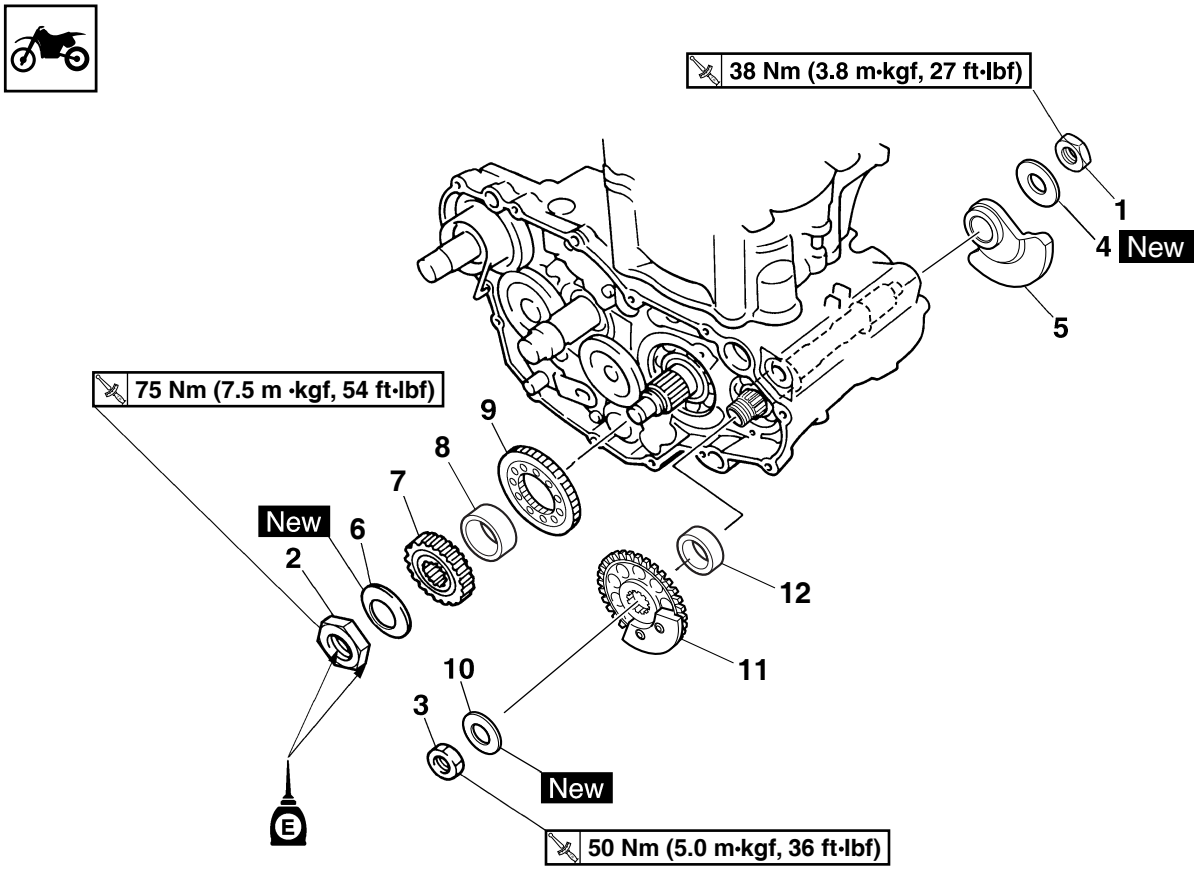

Order	Part name	Q'ty	Remarks
	Primary driven gear		Refer to "CLUTCH" on page 6-40.
	Right crankcase cover		Refer to "CLUTCH" on page 6-40.
	Generator rotor		Refer to "GENERATOR AND STARTER CLUTCH" on page 6-62.
1	Nut (balancer)	1	
2	Nut (primary drive gear)	1	
3	Nut (balancer shaft driven gear)	1	
4	Conical washer	1	
5	Balancer	1	
6	Conical washer	1	
7	Primary drive gear	1	
8	Collar	1	
9	Balancer shaft drive gear	1	
10	Conical washer	1	
11	Balancer weight gear	1	
12	Collar	1	
			For installation, reverse the removal procedure.

REMOVING THE BALANCER

1. Loosen:
   - Balancer nut “1”
   - Primary drive gear nut “2”
   - Balancer weight gear nut “3”

TIP

Place an aluminum plate “a” between the teeth of the balancer drive gear “4” and balancer weight gear “5”.

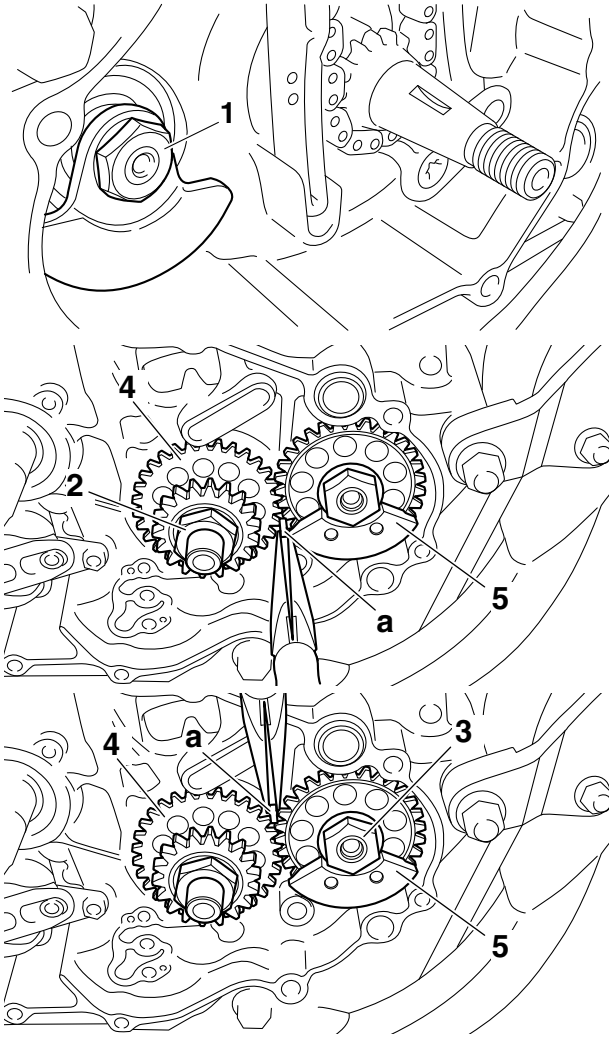

CHECKING THE PRIMARY DRIVE GEAR, BALANCER SHAFT DRIVE GEAR, AND BALANCER WEIGHT GEAR

1. Check:
   - Primary drive gear “1”
   - Balancer shaft drive gear “2”
   - Balancer weight gear “3”
     Wear/damage → Replace.

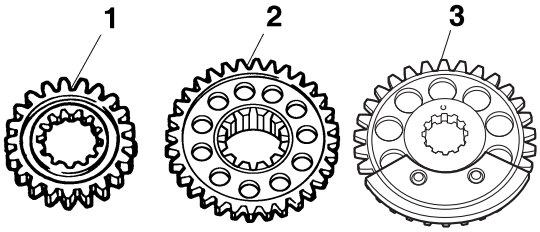

CHECKING THE BALANCER

1. Check:
   - Balancer
     Crack/damage → Replace.

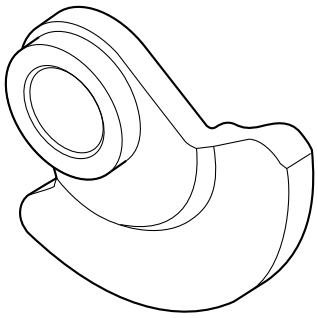

CHECKING THE OIL PUMP

1. Check:
   - Oil pump drive gear
   - Oil pump driven gear
   - Oil pump housing
   - Oil pump housing cover
     Cracks/damage/wear → Replace the defective part(s).
2. Measure:
   - Inner-rotor-to-outer-rotor-tip clearance “a”
   - Outer-rotor-to-oil-pump-housing clearance “b”
   - Oil-pump-housing-to-inner-rotor-and-outer-rotor clearance “c”
     Out of specification → Replace the oil pump.

Inner-rotor-to-outer-rotor-tip clearance
Less than 0.150 mm (0.0059 in)
Outer-rotor-to-oil-pump-housing clearance
0.13–0.18 mm (0.0051–0.0071 in)
Oil-pump-housing-to-inner-and-outer-rotor clearance
0.06–0.11 mm (0.0024–0.0043 in)

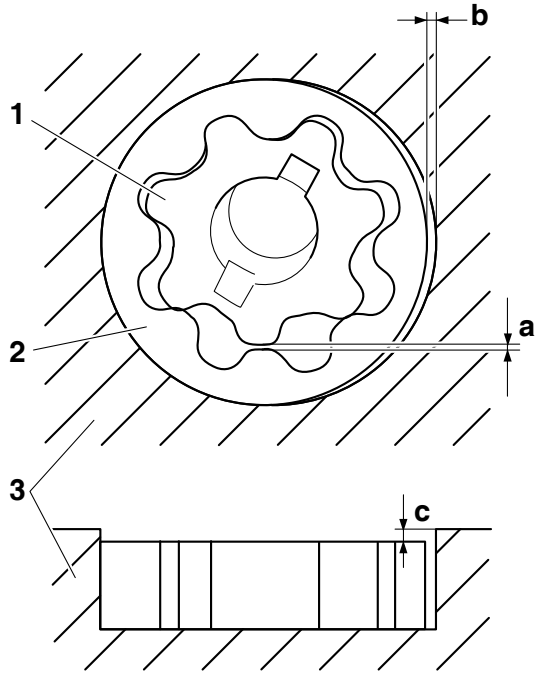

1. Inner rotor
2. Outer rotor
3. Oil pump housing

3. Check:
   - Oil pump operation
     Rough movement → Repeat steps (1) and (2) or replace the defective part(s).

ASSEMBLING THE OIL PUMP

1. Install:
   - Oil pump drive shaft “1”
   - Inner rotor “2”
   - Dowel pin “3”

TIP

- Apply the engine oil on the oil pump drive shaft and inner rotor.
- Fit the dowel pin into the groove in the inner rotor.

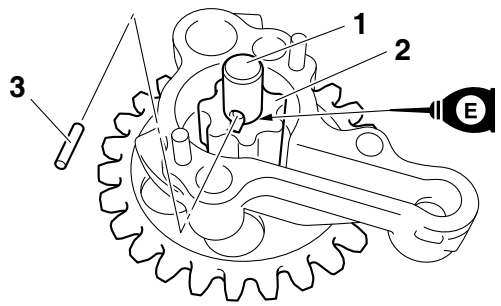

2. Install:
   - Outer rotor “1”

TIP

Apply the engine oil on the outer rotor.

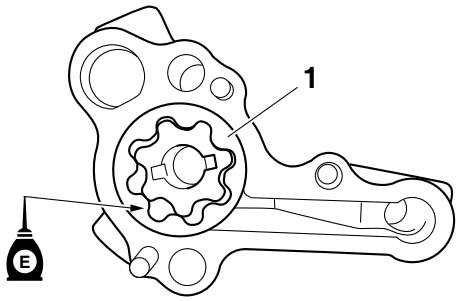

3. Install:
   - Oil pump cover “1”
   - Oil pump cover screw “2”

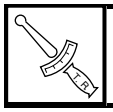	**Oil pump cover screw** **2.0 Nm (0.20 m·kgf, 1.4 ft·lbf)**

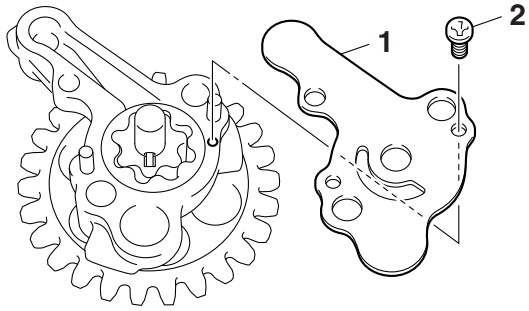

INSTALLING THE OIL PUMP AND BALANCER GEAR

1. Install:
   - Oil pump assembly “1”
   - Oil pump assembly bolt “2”

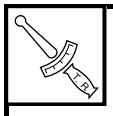	**Oil pump assembly bolt** **5 Nm (0.5 m·kgf, 3.6 ft·lbf)** **LOCTITE®**

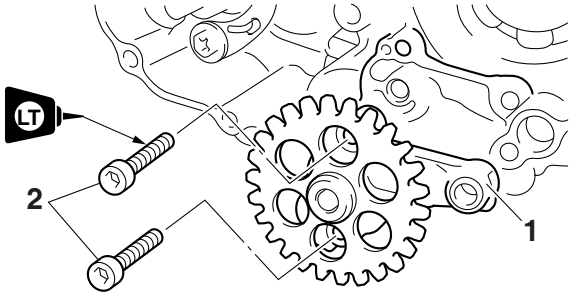

NOTICE

After tightening the bolts, make sure that the oil pump turns smoothly.

2. Install:
   - Collar “1”
   - Balancer weight gear “2”

TIP

Install the balancer weight gear and balancer shaft with their lower splines “a” aligning with each other.

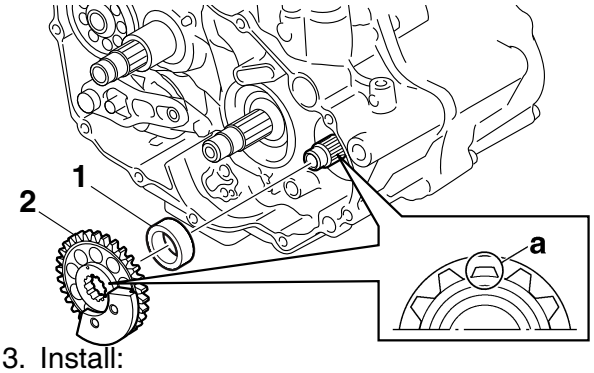

3. Install:
   - Balancer drive gear “1”
   - Collar “2”

TIP

- Align the punched mark “a” on the balancer drive gear with the punched mark “b” on the balancer weight gear.
- Install the balancer drive gear and crankshaft with the lower splines “c” aligning with each other.

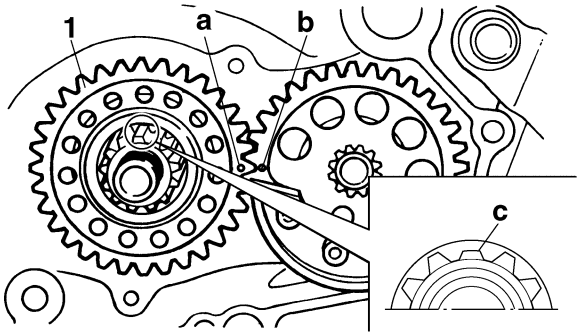

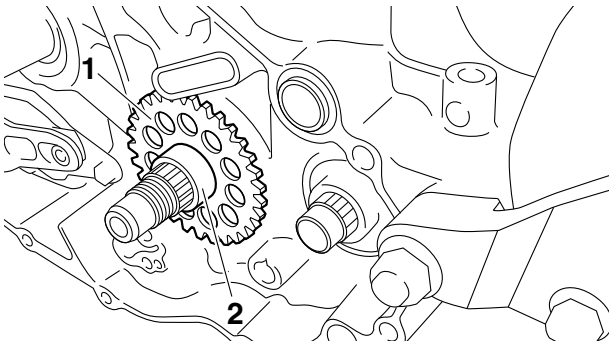

4. Install:
   - Conical washer “1” New
   - Balancer weight gear nut “2”

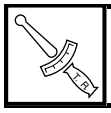	**Balancer weight gear nut 50 Nm (5.0 m·kgf, 36 ft·lbf)**

   - Primary drive gear “3”
   - Conical washer “4” New
   - Primary drive gear nut “5”

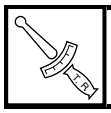	**Primary drive gear nut 75 Nm (7.5 m·kgf, 54 ft·lbf)**

   - Balancer “6”
   - Conical washer “7” New
   - Balancer nut “8”

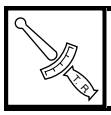	**Balancer nut 38 Nm (3.8 m·kgf, 27 ft·lbf)**

TIP

- Apply engine oil to the contact surface and threaded portion of the primary drive gear nut.
- Place an aluminum plate “a” between the teeth of the balancer drive gear “9” and balancer weight gear “10”.
- Install the conical washer with its convex surface “b” outward.
- Align the balancer flat portion “c” with the flat portion “d”.

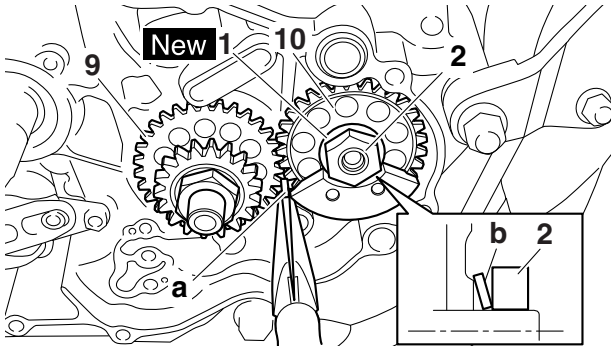

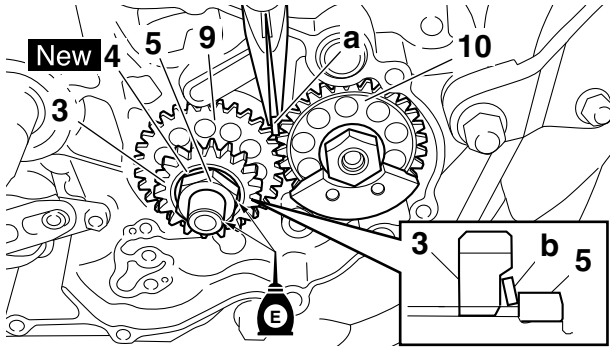

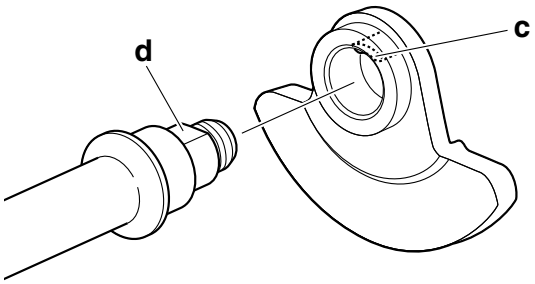
d
c

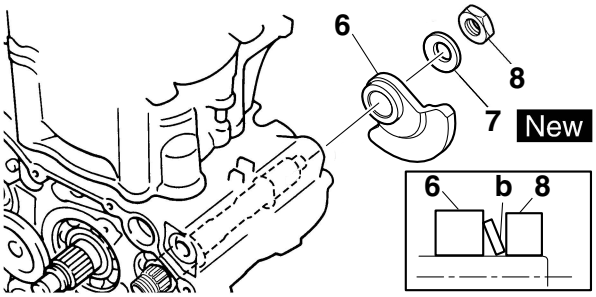
6
8
7
New
6
b
8

GENERATOR AND STARTER CLUTCH

Removing the generator

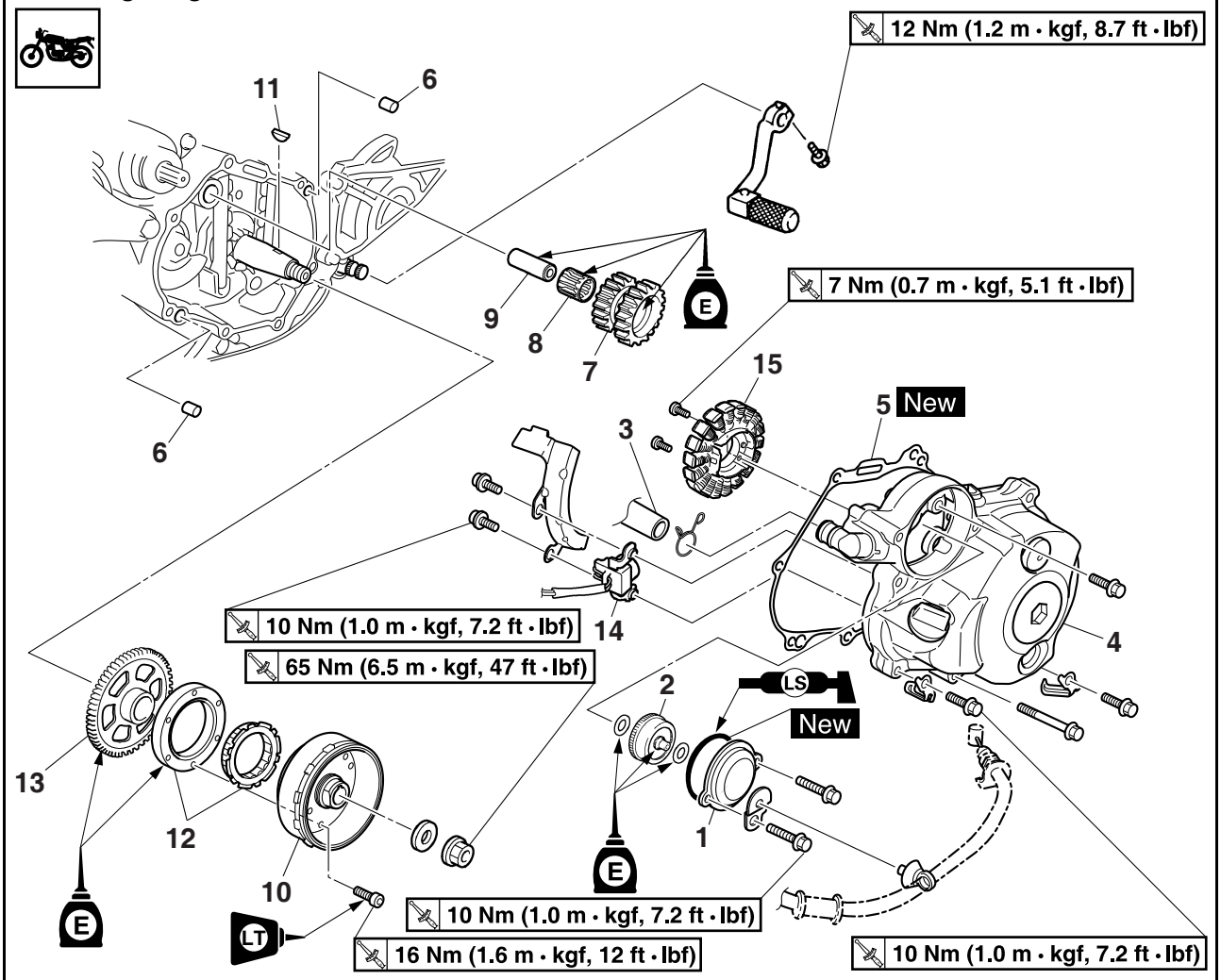

Order	Job/Parts to remove	Q'ty	Remarks
	Drain the engine oil.		Refer to "CHANGING THE ENGINE OIL" on page 3-17.
	Seat and fuel tank		Refer to "GENERAL CHASSIS" on page 5-1 and "FUEL TANK" on page 8-1.
	Disconnect the AC magneto lead.		
	Clutch cable		
	Shift pedal		Refer to "SHIFT SHAFT" on page 6-52.
1	Cover (Damper assembly)	1	
2	Damper assembly	1	
3	Breather hose	1	
4	Left crankcase cover	1	
5	Gasket	1	
6	Dowel pin	2	
7	Starter idle gear	1	
8	Bearing	1	
9	Starter idle gear shaft	1	
10	Generator rotor	1	

Removing the generator

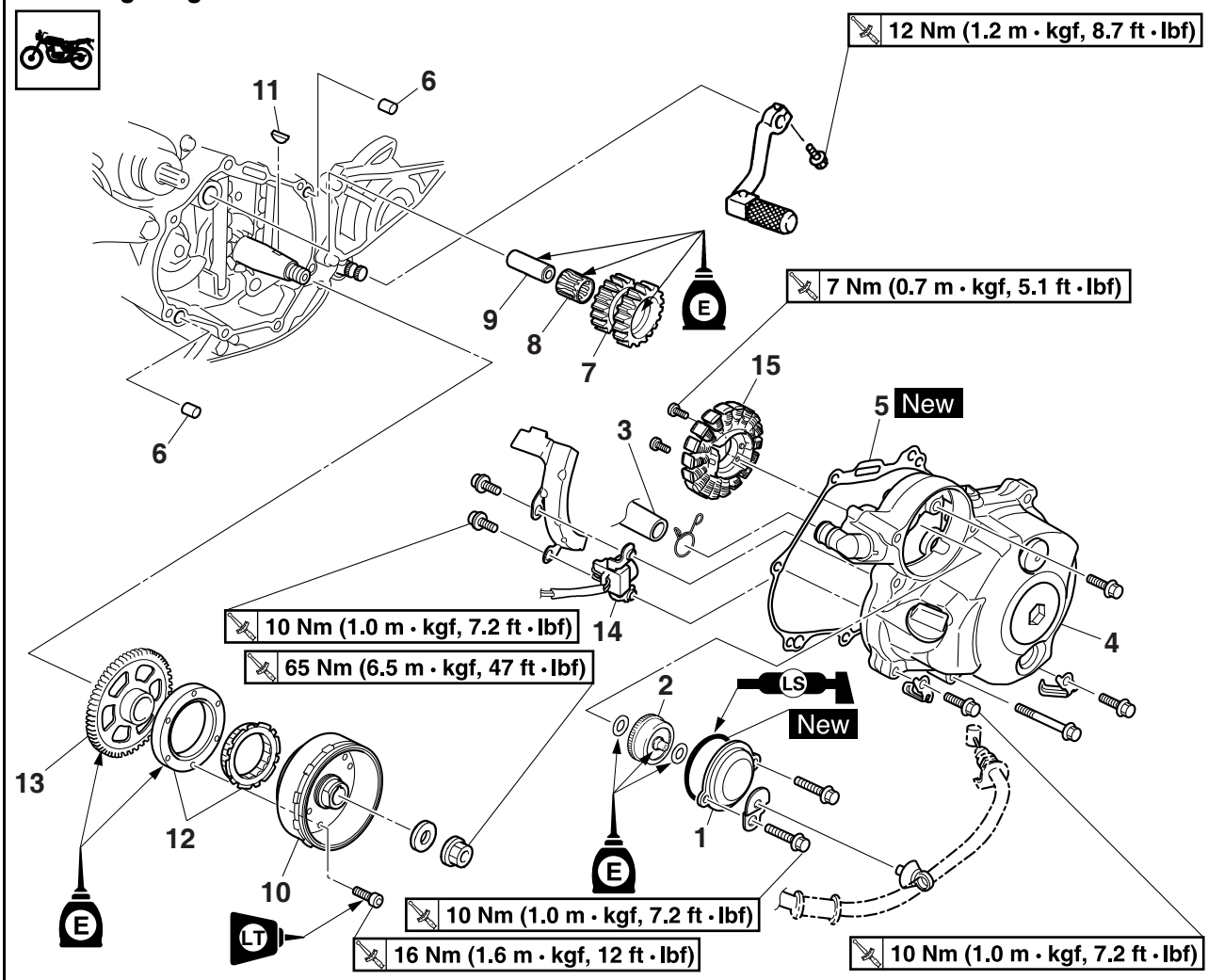

Order	Job/Parts to remove	Q'ty	Remarks
11	Woodruff key	1	
12	Starter clutch	1	
13	Starter clutch drive gear	1	
14	Crankshaft position sensor	1	
15	Stator	1	
			For installation, reverse the removal procedure.

REMOVING THE GENERATOR

1. Remove:
   - Generator rotor nut “1”
   - Washer

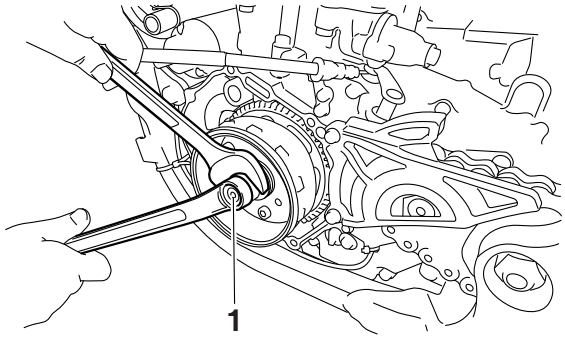

2. Remove:
   - Generator rotor “1”
     (with the rotor puller “2”)
   - Woodruff key

	**Rotor puller** **90890-04142** **Rotor puller** **YM-04142**

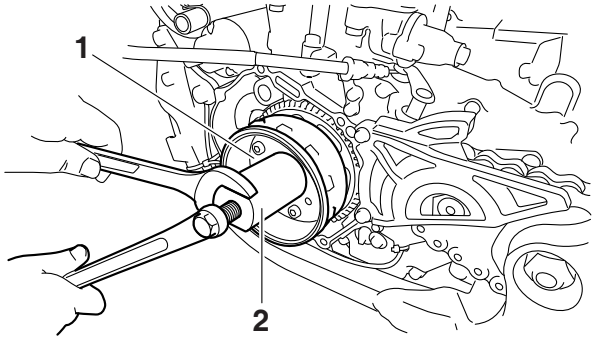

CHECKING THE STARTER CLUTCH

1. Check:
   - Starter clutch rollers
     Damage/wear → Replace.

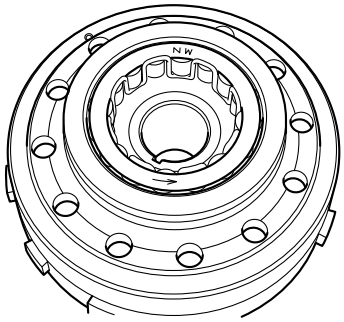

2. Check:
   - Starter clutch idle gear
   - Starter clutch gear
     Burrs/chips/roughness/wear → Replace the defective part (s).
3. Check:
   - Starter clutch gear
     Damage/pitting/wear → Replace the starter clutch gear.
4. Check:
   - Damper assembly
     Damage/pitting/wear → Replace the damper assembly.
     Check the gear of the starter motor armature.

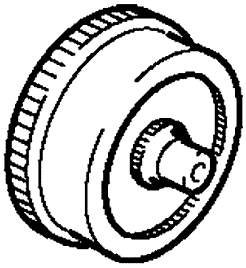

5. Check:
   - Starter clutch operation

▼▼▼▼▼▼▼▼▼▼▼▼▼▼▼▼▼▼▼▼▼▼▼▼▼▼▼▼▼▼▼▼▼▼

a. Install the starter clutch drive gear “1” onto the starter clutch and hold the starter clutch.
b. When turning the starter clutch drive gear clockwise “A”, the starter clutch and the starter clutch drive gear should engage, otherwise the starter clutch is faulty and must be replaced.
c. When turning the starter clutch drive gear counterclockwise “B”, it should turn freely, otherwise the starter clutch is faulty and must be replaced.

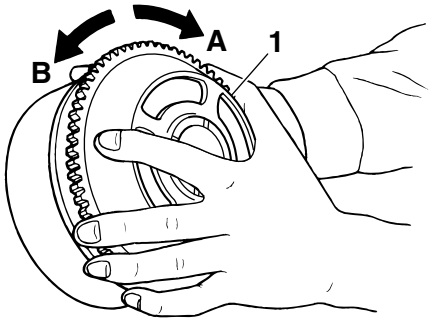

▲▲▲▲▲▲▲▲▲▲▲▲▲▲▲▲▲▲▲▲▲▲▲▲▲▲▲▲▲▲▲▲▲▲

INSTALLING THE STARTER CLUTCH

1. Install:
   - Stator “1”
   - Stator bolt “2”

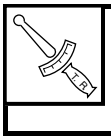	**Stator bolt** **7 Nm (0.7 m·kgf, 5.1 ft·lbf)** **LOCTITE®**

   - Crankshaft position sensor “3”
   - Holder “4”
   - Crankshaft position sensor bolt “5”

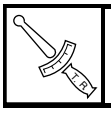	**Crankshaft position sensor bolt** **10 Nm (1.0 m·kgf, 7.2 ft·lbf)**

TIP

- Pass the AC magneto lead “6” and crankshaft position sensor lead “7” under the holder as shown.
- Tighten the stator bolt using the T25 bit.
- Apply the sealant to the grommet of the AC magneto lead.

	**Yamaha bond No. 1215** **90890-85505** **(Three bond No.1215®)**

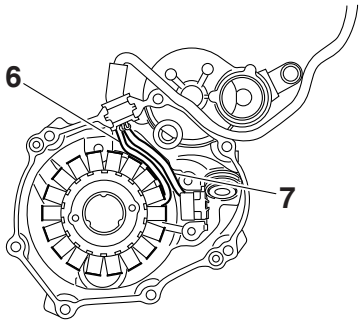

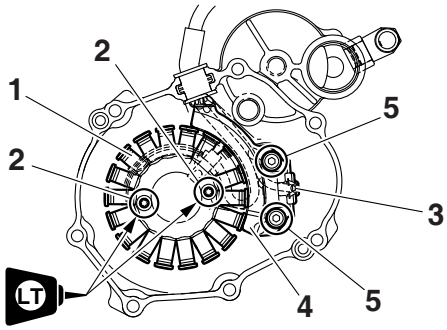

2. Install
   - Starter clutch drive gear “1”

TIP

Apply the engine oil on the starter clutch drive gear inner circumference.

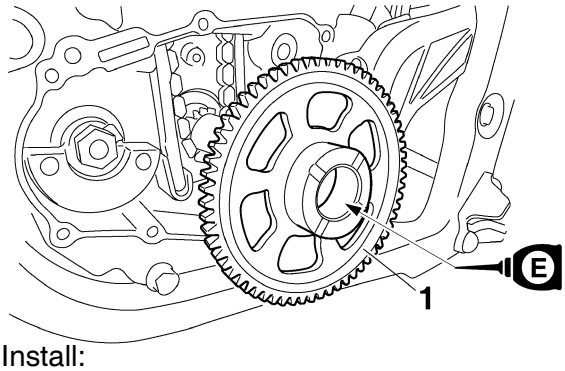

3. Install:
   - Starter clutch “1”
     To generator rotor “2”.

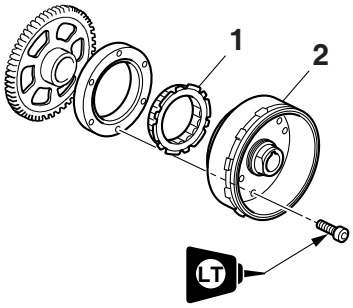

	**Starter clutch bolt** **16 Nm (1.6 m·kgf, 12 ft·lbf)** **LOCTITE®**

INSTALLING THE GENERATOR

1. Install:
   - Woodruff key “1”
   - Generator rotor “2”

TIP

- Clean the contact surfaces of the tapered portions of the crankshaft and generator rotor.
- When installing the woodruff key, make sure that its flat surface “a” is in parallel with the crankshaft center line “b”.
- When installing the generator rotor, align the keyway “c” of the generator rotor with the woodruff key.

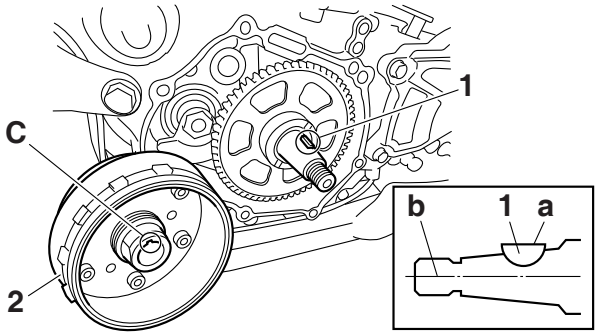

2. Install:
   - Washer
   - Generator rotor nut “1”

	Generator rotor nut **65 Nm (6.5 m·kgf, 47 ft·lbf)**

TIP

Tighten the generator rotor nut to 65 Nm (6.5 m·kgf, 47 ft·lbf), loosen and retighten the generator rotor nut to 65 Nm (6.5 m·kgf, 47 ft·lbf).

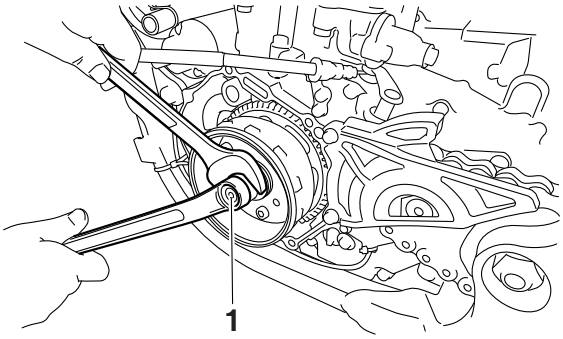

3. Install:
   - Starter idle gear shaft “1”
   - Bearing “2”
   - Starter idle gear 2 “3”

TIP

Apply the engine oil on the starter idle gear shaft, bearing and idle gear inner circumference.

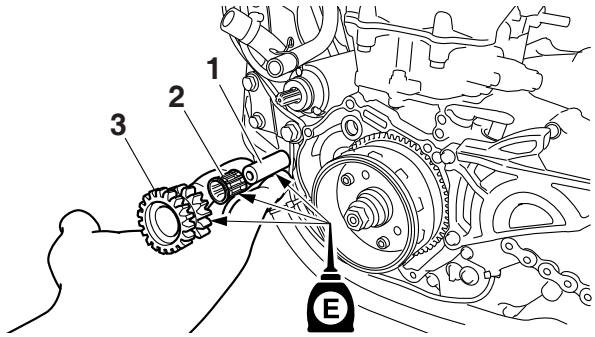

4. Install:
   - Dowel pin
   - Crankcase cover gasket New
   - Left crankcase cover “1”
   - Lead holder “2”
   - Crankcase cover bolt

	Crankcase cover bolt **10 Nm (1.0 m·kgf, 7.2 ft·lbf)**

   - Neutral switch lead “3”

TIP

- Pass the AC magneto lead “4” under the left crankcase cover “a” as shown.
- Tighten the bolts in stage, using a crisscross pattern.

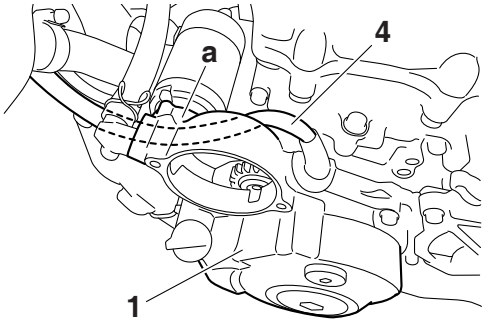

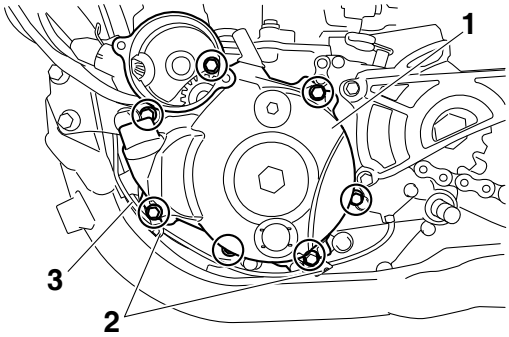

5. Install:
   - Washer “1”
   - Damper assembly “2”
   - Washer “3”

TIP

Apply the engine oil to the shaft and washers.

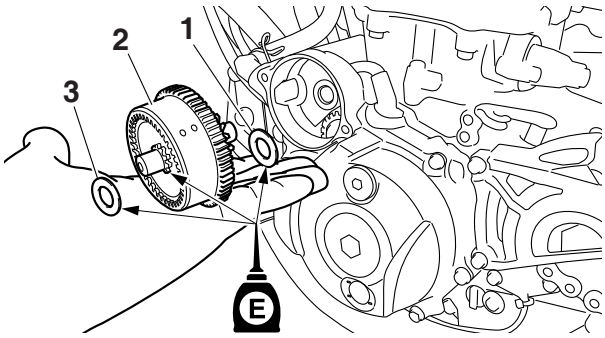

6. Install:
   - Cover (damper assembly) “1”
   - Bracket “2”
   - Bolt “3”
   - Breather hose 2 “4”

	Bolt **10 Nm (1.0 m·kgf, 7.2 ft·lbf)**

TIP

Install the cover (damper assembly) with its mark “a” facing upward.

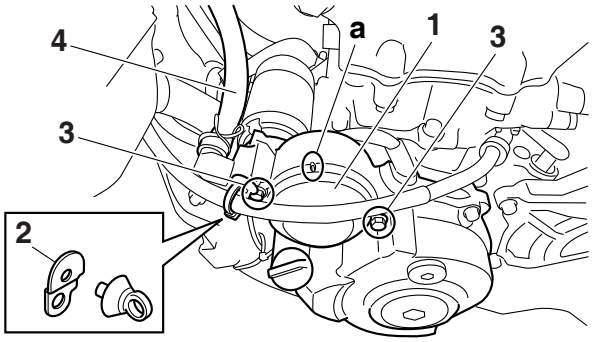

CRANKCASE

Separating the crankcase

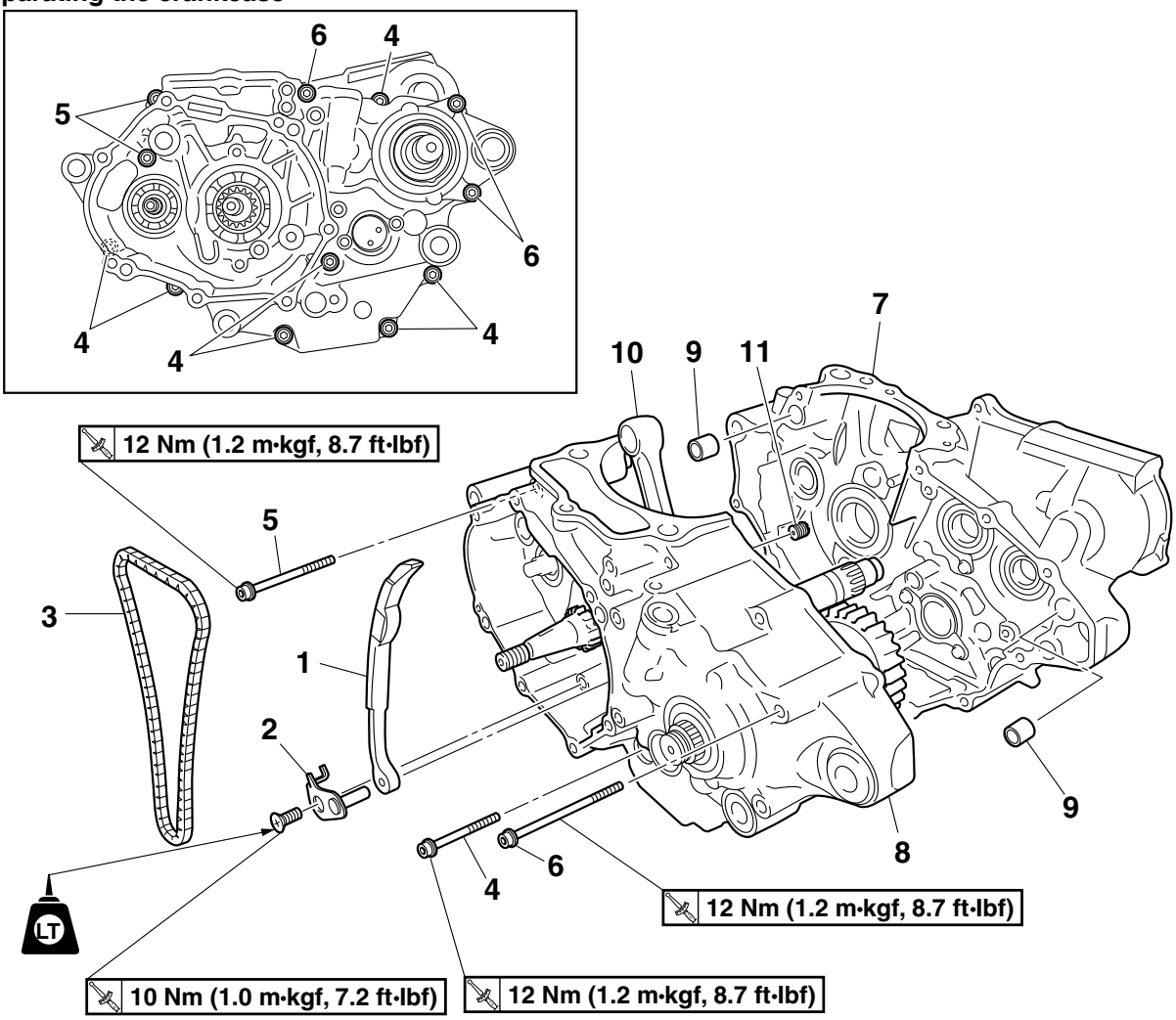

Order	Part name	Q'ty	Remarks
	Engine		Refer to "ENGINE REMOVAL" on page 6-1.
	Piston		Refer to "CYLINDER AND PISTON" on page 6-30.
	Balancer		Refer to "OIL PUMP AND BALANCER GEAR" on page 6-56.
	Kick shaft assembly		Refer to "KICKSTATER" on page 6-49.
	Segment		Refer to "SHIFT SHAFT" on page 6-52.
	Generator rotor		Refer to "GENERATOR AND STARTER CLUTCH" on page 6-62.
1	Timing chain guide (exhaust side)	1	
2	Timing chain guide stopper plate	1	
3	Timing chain	1	
4	Bolt [L = 45 mm (1.77 in)]	7	
5	Bolt [L = 60 mm (2.36 in)]	2	
6	Bolt [L = 75 mm (2.95 in)]	3	
7	Right crankcase	1	
8	Left crankcase	1	
9	Dowel pin	2	

Separating the crankcase

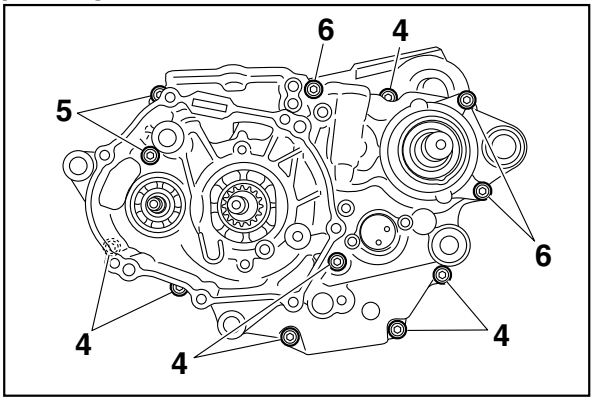

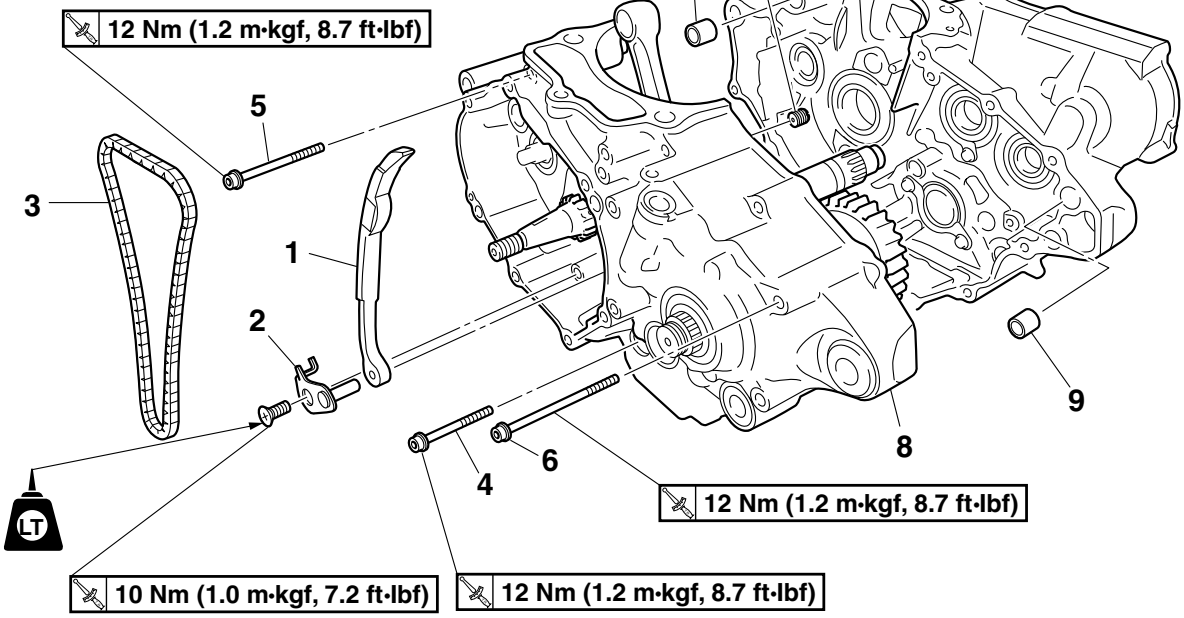

Order	Part name	Q'ty	Remarks
10	Crankshaft	1	
11	Oil passage squeeze nozzle	1	
			For assembly, reverse the disassemble procedure.

Removing the bearing and oil seal

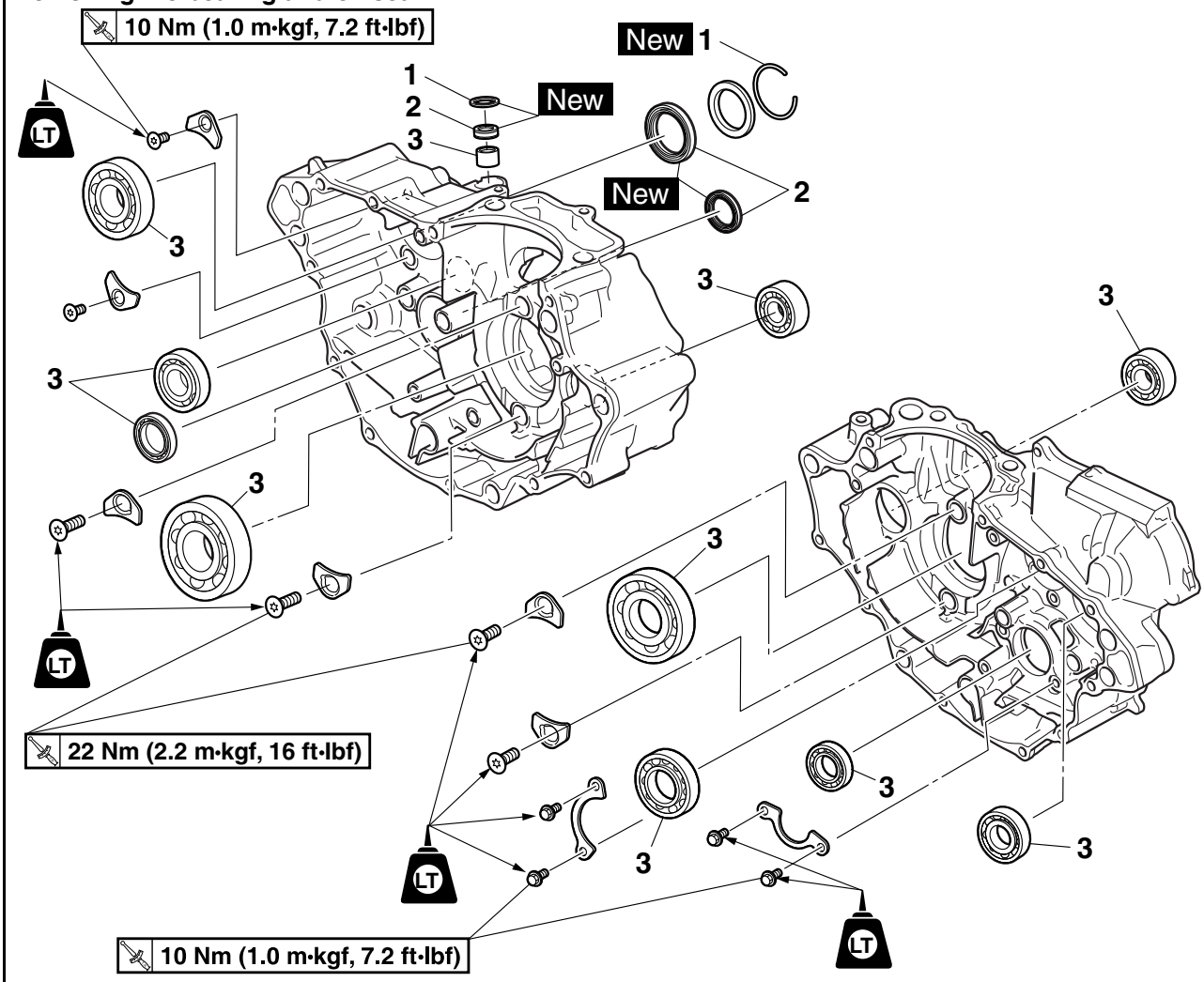

Order	Part name	Q'ty	Remarks
	Transmission		Refer to "TRANSMISSION" on page 6-76.
	Shift cam and shift fork		Refer to "TRANSMISSION" on page 6-76.
1	Circlip	2	
2	Oil seals	3	
3	Bearing	11	
			For installation, reverse the removal procedure.

DISASSEMBLING THE CRANKCASE

1. Separate:
   - Right crankcase
   - Left crankcase

▼▼▼▼▼▼▼▼▼▼▼▼▼▼▼▼▼▼▼▼▼▼▼▼▼▼▼▼▼▼▼▼▼▼

a. Remove the crankcase bolts.

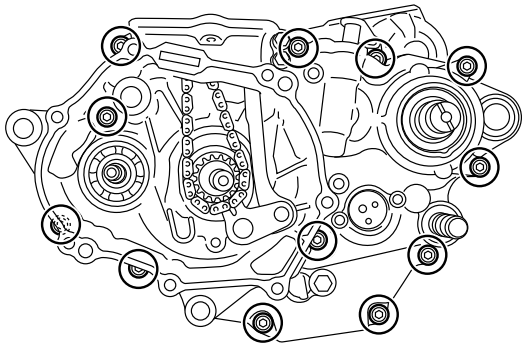

TIP

Loosen each bolt 1/4 of a turn at a time and after all the bolts are loosened, remove them.

b. Remove the right crankcase “1”.

TIP

- Place the crankcase with its left side downward and split it by inserting a screwdriver tip into the splitting slit “a” in the crankcase.
- Lift the right crankcase horizontally while lightly patting the crankcase splitting slit and the engine mounting boss using a soft hammer, and leave the crankshaft and the transmission with the left crankcase.

NOTICE

Use soft hammer to tap on the case half. Tap only on reinforced portions of case. Do not tap on gasket mating surface. Work slowly and carefully. Make sure the case halves separate evenly. If the cases do not separate, check for a remaining case bolt or fitting. Do not force.

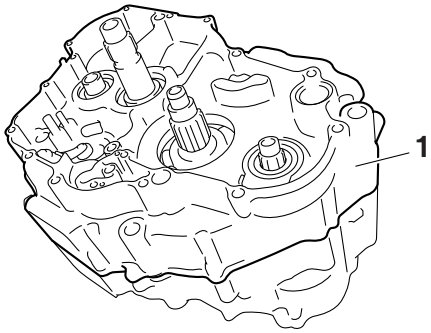

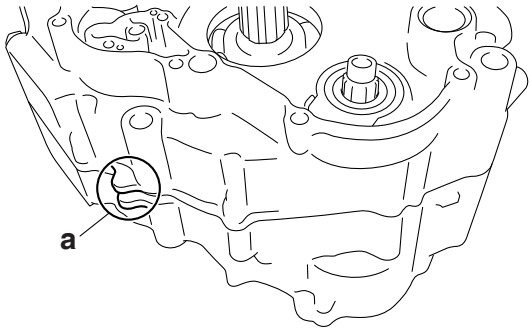

c. Remove the dowel pins and O-ring.

▲▲▲▲▲▲▲▲▲▲▲▲▲▲▲▲▲▲▲▲▲▲▲▲▲▲▲▲▲▲▲▲▲▲

REMOVING THE CRANKCASE BEARING

1. Remove:
   - Bearing “1”

TIP

- Remove the bearing from the crankcase by pressing its inner race.
- Do not use the removed bearing.

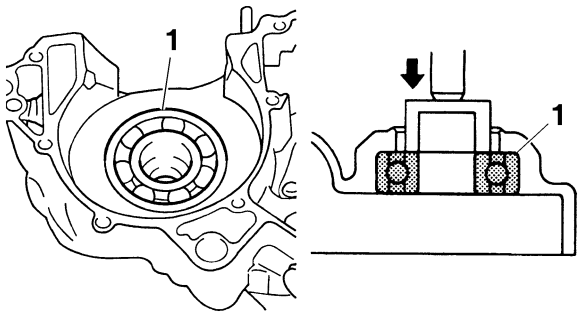

CHECKING THE TIMING CHAIN, TIMING CHAIN GUIDE, OIL STRAINER

1. Check:
   - Timing chain
     Stiffness → Replace the camshaft sprocket, timing chain and crankshaft sprocket as a set.
2. Check:
   - Timing chain guide
     Damage/wear → Replace

CHECKING THE CRANKCASE

1. Wash:
   - Crankcase

TIP

- Wash the crankcase in a mild solvent.
- Remove any remaining gasket from the crankcase mating surface.

2. Check:
   - Crankcase
     Crack/damage → Replace.

- Oil delivery passages
  Obstruction → Blow out with compressed air.

INSTALLING THE OIL SEAL

1. Install:
   - Oil seal "1" New
     (to left crankcase)

	**Installed depth "a"** **4.5–5.0 mm (0.18–0.20 in)**

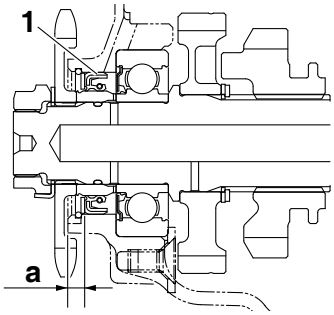

ASSEMBLING THE CRANKCASE

1. Install:
   - Bearing cover plate screw

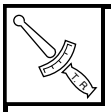	**Bearing cover plate screw** **10 Nm (1.0 m·kgf, 7.2 ft·lbf)** **LOCTITE®** **Bearing cover plate screw (crankshaft)** **22 Nm (2.2 m·kgf, 16 ft·lbf)** **LOCTITE®**

TIP

Install the bearing by pressing its outer race parallel.

2. Apply:
   - Sealant
     (to the crankcase mating surface)

	**Yamaha bond No. 1215** **90890-85505** **(Three bond No.1215®)**

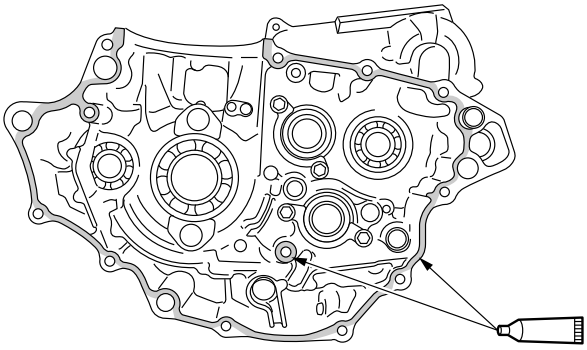

3. Install:
   - Dowel pin "1"
   - Crankcase "2"
     (to the left crankcase)

	**Crankcase bolt** **12 Nm (1.2 m·kgf, 8.7 ft·lbf)**

TIP

- Apply the lithium-soap-based grease on the O-ring.
- Fit the right crankcase onto the left crankcase. Tap lightly on the case with soft hammer.
- When installing the crankcase, the connecting rod should be positioned at top dead center (TDC).
- Tighten the bolts in a crisscross pattern in two (2) stages, with 1/4 turn each.

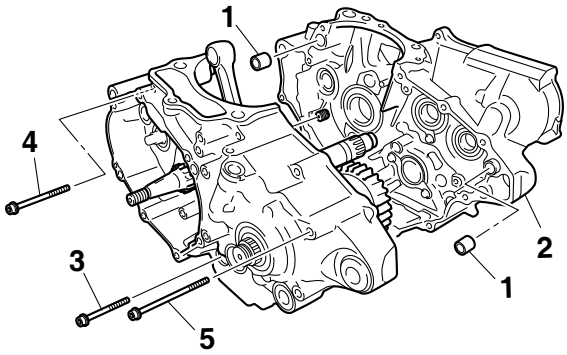

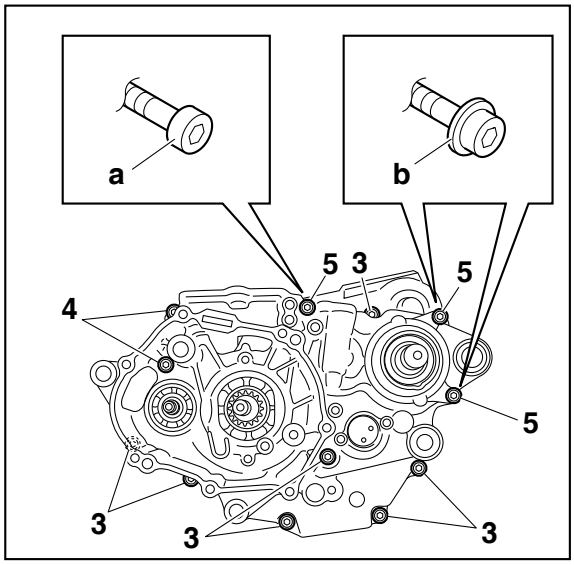

3. 45 mm (1.77 in)
4. 60 mm (2.36 in)
5. 75 mm (2.95 in)

a. Hexagon socket head bolt without flange
b. Hexagon socket head bolt with flange

CRANKSHAFT ASSEMBLY AND BALANCER SHAFT

Removing the crankshaft assembly and balancer shaft

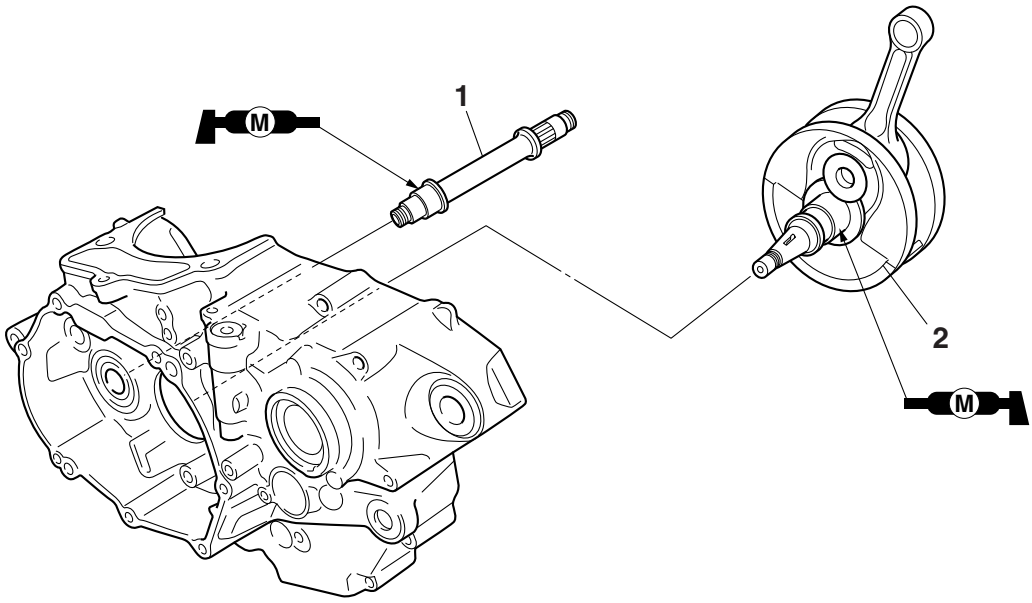

Order	Part name	Q'ty	Remarks
	Crankcase		Separate. Refer to "CRANKCASE" on page 6-68.
	Transmission		Refer to "TRANSMISSION" on page 6-76.
1	Balancer shaft	1	
2	Crankshaft assembly	1	
			For installation, reverse the removal procedure.

REMOVING THE CRANKSHAFT ASSEMBLY

1. Remove:
   - Crankshaft assembly “1”

TIP

Remove the crankshaft assembly by using the crankcase separating tool “2”.

	**Crankcase separating tool 90890-04152** **Crankcase separating tool YU-A9642**

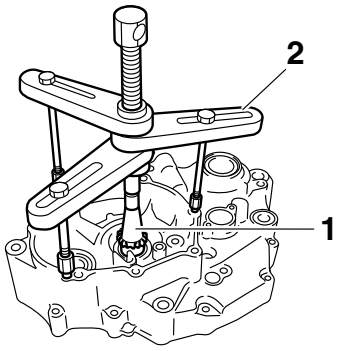

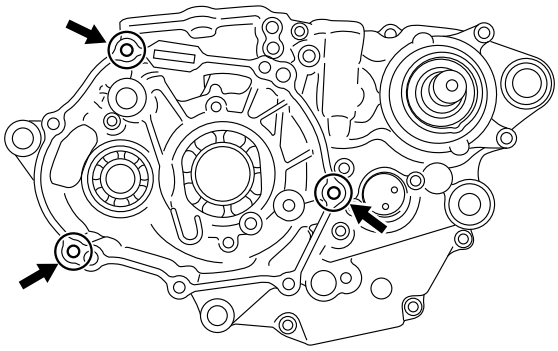

CHECKING THE CRANKSHAFT ASSEMBLY

1. Measure:
   - Crankshaft runout
     Out of specification → Replace the crankshaft, bearing or both.

TIP

Turn the crankshaft slowly.

	**Runout limit C** **0.030 mm (0.0012 in)**

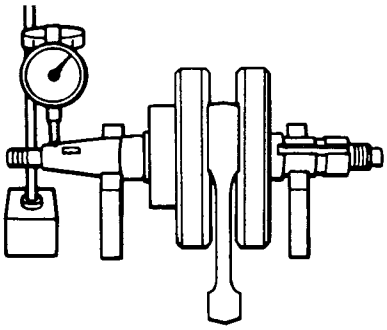

2. Measure:
   - Big end side clearance D “a”
     Out of specification → Replace the big end bearing, crankshaft pin, or connecting rod.

	**Big end side clearance D** **0.150–0.450 mm (0.0059–0.0177 in)**

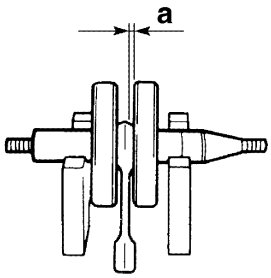

3. Measure:
   - Crankshaft width A “a”
     Out of specification → Replace the crankshaft.

	**Width A** **55.95–56.00 mm (2.203–2.205 in)**

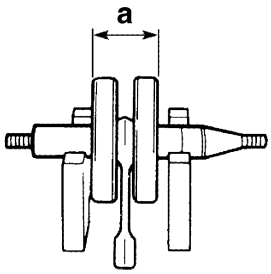

4. Check:
   - Crankshaft sprocket “1”
     Damage → Replace the crankshaft.

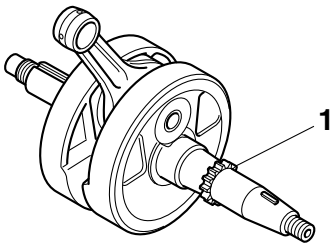

5. Check:
   - Crankshaft journal oil passage
     Obstruction → Blow out with compressed air.

INSTALLING THE CRANKSHAFT ASSEMBLY

1. Install:
   - Crankshaft assembly

TIP

Install the crankshaft assembly with the crankshaft installer pot “1”, crankshaft installer bolt “2”, adapter (M12) “3” and spacer “4”.

Crankshaft installer pot
90890-01274
Installing pot
YU-90058
Crankshaft installer bolt
90890-01275
Bolt
YU-90060
Adapter (M12)
90890-01278
Adapter #3
YU-90063
Spacer (crankshaft installer)
90890-04081
Pot spacer
YM-91044

NOTICE

- **To avoid scratching the crankshaft and to ease the installation procedure, lubricate the oil seal lips with lithium-soap-based grease.**
- **In order to prevent the crankshaft seizure, apply molybdenum disulfide grease.**

TIP

Hold the connecting rod at top dead center (TDC) with one hand while turning the nut of the crankshaft installer bolt with the other. Turn the crankshaft installer bolt until the crankshaft assembly bottoms against the bearing.

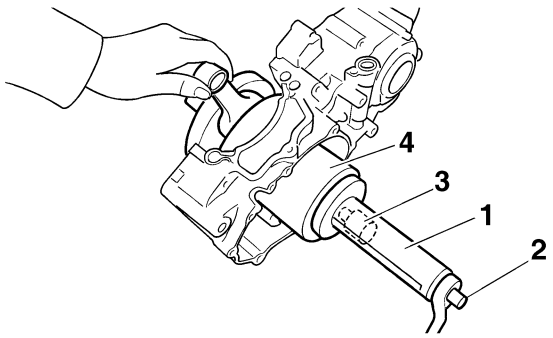

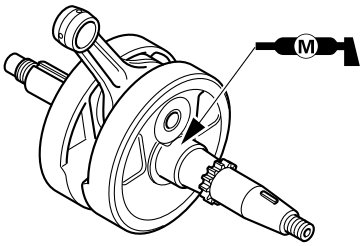

INSTALLING THE BALANCER SHAFT

1. Install:
   - Balancer shaft “1”

TIP

Apply the molybdenum grease to the part “a” where the balancer shaft fit into the bearing.

NOTICE

Do not apply the molybdenum grease to the balancer shaft thread.

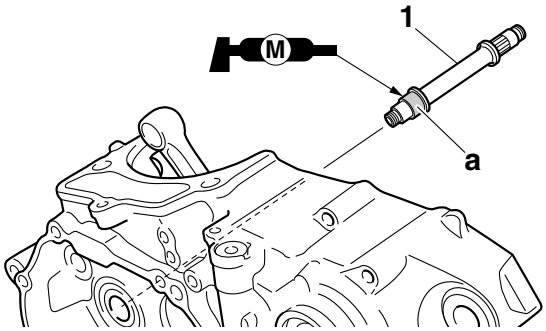

TRANSMISSION

Removing the transmission, shift drum assembly, and shift forks

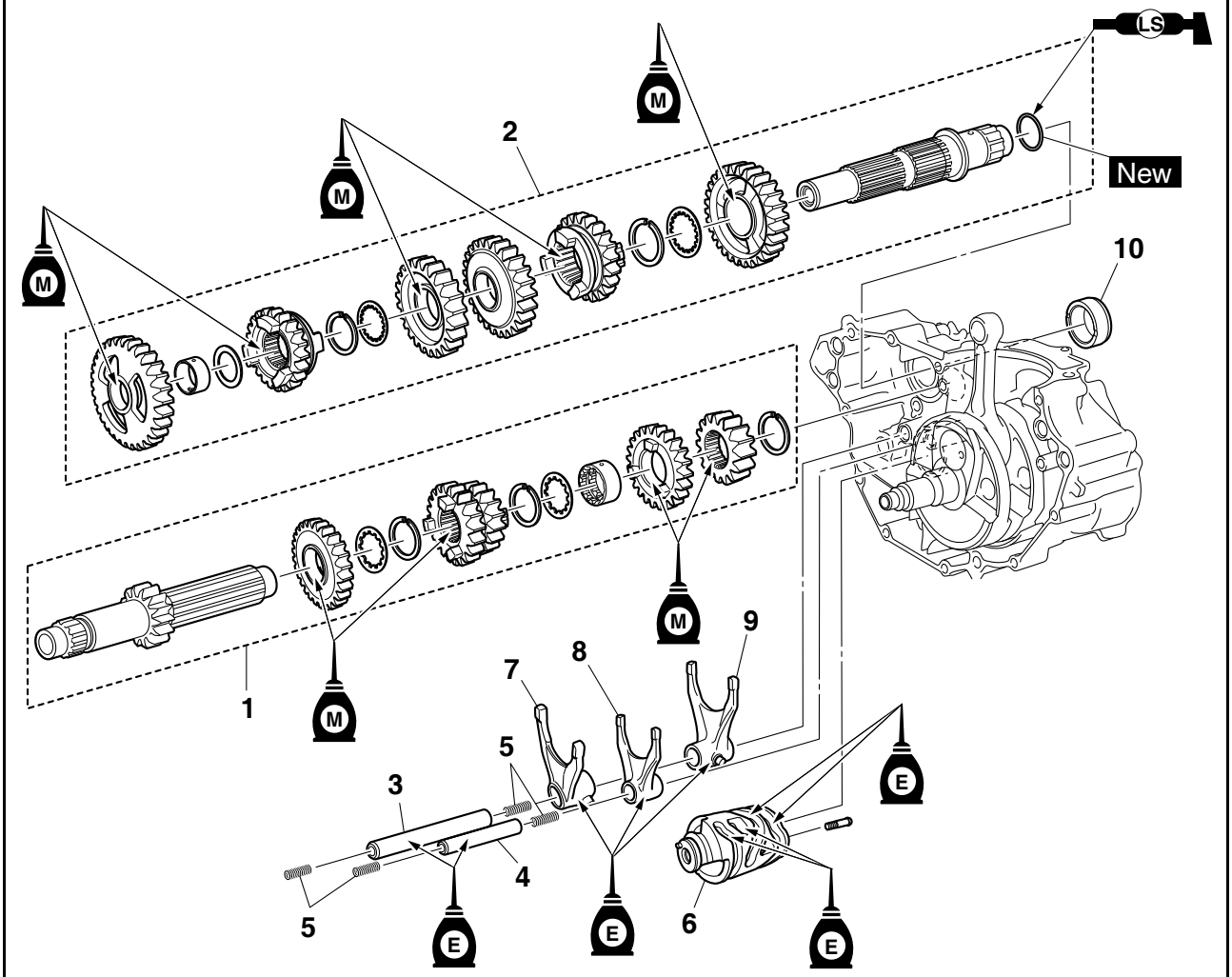

Order	Part name	Q'ty	Remarks
	Engine		Refer to "ENGINE REMOVAL" on page 6-1.
	Crankcase		Separate. Refer to "CRANKCASE" on page 6-68.
1	Main axle	1	
2	Drive axle	1	
3	Long shift fork guide bar	1	
4	Short shift fork guide bar	1	
5	Spring	4	
6	Shift cam	1	
7	Shift fork 3 (R)	1	
8	Shift fork 2 (C)	1	
9	Shift fork 1 (L)	1	
10	Collar	1	
			For installation, reverse the removal procedure.

REMOVING THE TRANSMISSION

1. Remove:
   - Long shift fork guide bar “1”
   - Short shift fork guide bar “2”
   - Shift cam “3”
   - Shift fork 3 “4”
   - Shift fork 2 “5”
   - Shift fork 1 “6”
   - Main axle “7”
   - Drive axle “8”
   - Collar “9”

TIP

- Remove assembly with the collar “9” installed to the crankcase.
- Make a note of the position of each part. Pay particular attention to the location and direction of shift forks.
- Remove the main axle and the drive axle all together by tapping the drive axle lightly with a soft hammer.

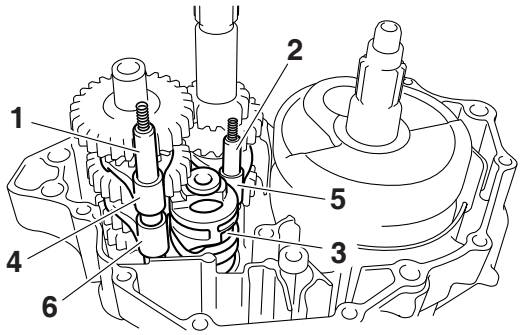

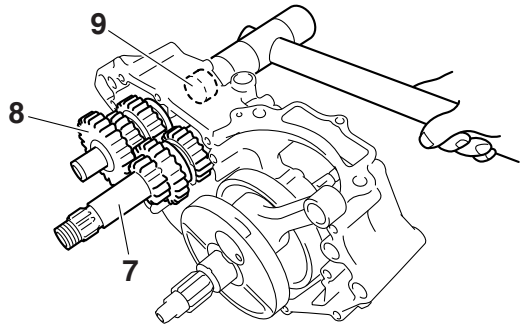

CHECKING THE SHIFT FORKS

1. Check:
   - Shift fork cam follower “1”
   - Shift fork pawl “2”
     Bends/damage/scoring/wear → Replace the shift fork.

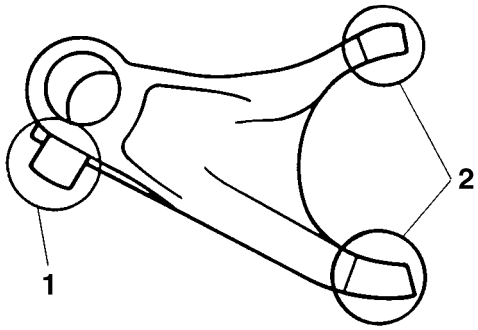

2. Check:
   - Shift fork guide bar
     Roll the shift fork guide bar on a flat surface.
     Bends → Replace.

WARNING

Do not attempt to straighten a bent shift fork guide bar.

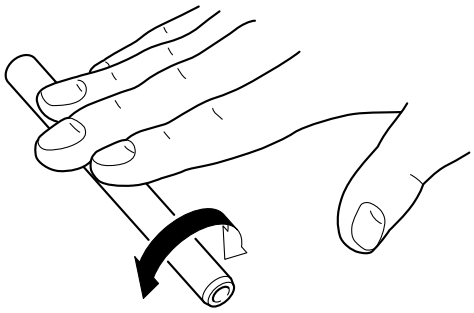

3. Check:
   - Shift fork movement
     (along the shift fork guide bar)
     Rough movement → Replace the shift forks and shift fork guide bar as a set.

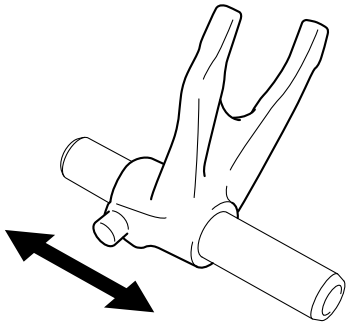

CHECKING THE SHIFT DRUM ASSEMBLY

1. Check:
   - Shift drum groove
     Damage/scratches/wear → Replace the shift drum assembly.
   - Shift drum segment “1”
     Damage/wear → Replace the shift drum assembly.

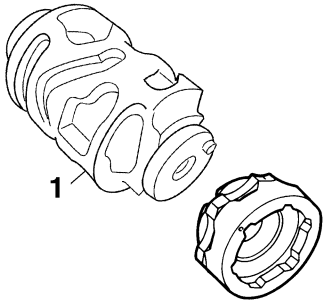

CHECKING THE TRANSMISSION

1. Measure:
   - Main axle runout
     (with a centering device and dial gauge “1”)
     Out of specification → Replace the main axle.

	Main axle runout limit **0.08 mm (0.0032 in)**

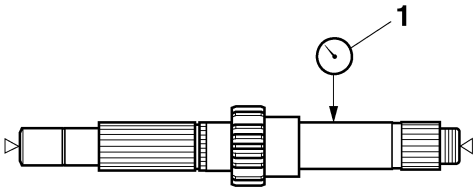

2. Measure:
   - Drive axle runout
     (with a centering device and dial gauge “1”)
     Out of specification → Replace the drive axle.

	Drive axle runout limit **0.08 mm (0.0032 in)**

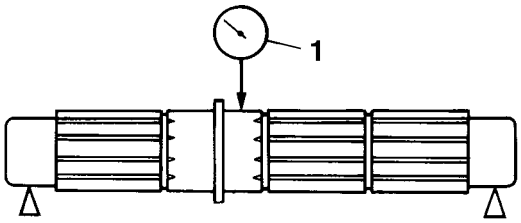

3. Check:
   - Transmission gears
     Blue discoloration/pitting/wear → Replace the defective gear (s).
   - Transmission gear dogs
     Cracks/damage/rounded edges → Replace the defective gear (s).
4. Check:
   - Transmission gear movement
     Rough movement → Replace the defective gear (s).

INSTALLING THE TRANSMISSION

1. Install:
   - 6th pinion gear (27T) “1”
   - 3rd/4th pinion gear (18T/21T) “2”
   - Collar “3”
   - 5th pinion gear (23T) “4”
   - 2nd pinion gear (16T) “5”
     (to the main axle “6”)

TIP

Before installation, apply molybdenum disulfide oil to the inner and end surface of the idler gear and to the inner surface of the sliding gear, then install.

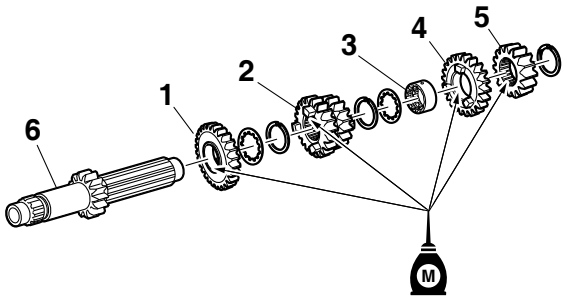

2. Install:
   - 2nd wheel gear (29T) “1”
   - 5th wheel gear (22T) “2”
   - 3rd wheel gear (26T) “3”
   - 4th wheel gear (24T) “4”
   - 6th wheel gear (22T) “5”
   - Collar “6”
   - 1st wheel gear (31T) “7”
   - O-ring “8” New
     (to the drive axle “9”)

TIP

- Before installation, apply molybdenum disulfide oil to the inner and end surface of the idler gear and to the inner surface of the sliding gear, then install.
- Apply the lithium-soap-based grease on the O-ring.

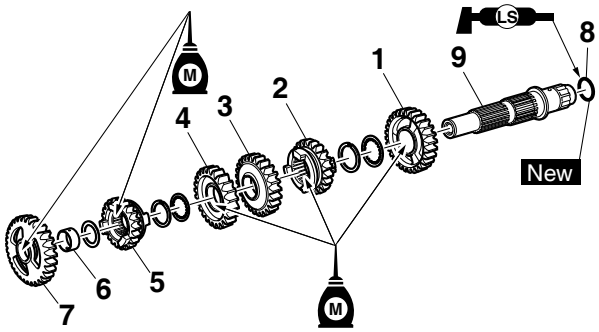

3. Install:
   - Washer “1”
   - Circlip “2” New

TIP

- Be sure the circlip sharp-edged corner “a” is positioned opposite side to the washer and gear “b”.
- Install the circlip with its ends “c” settled evenly on the spline crests.

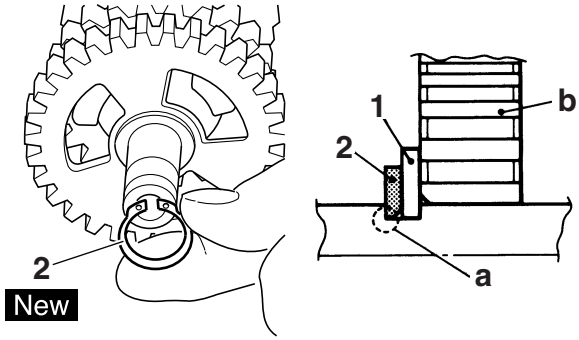

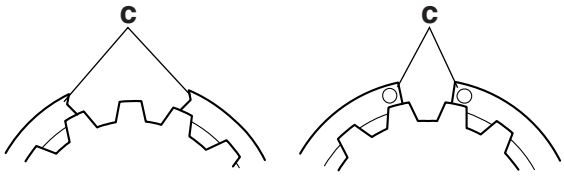

4. Install:
   - Collar “1”

TIP

- Apply the lithium-soap-based grease on the oil seal lip.
- When installing the collar into the crankcase, pay careful attention to the crankcase oil seal lip.

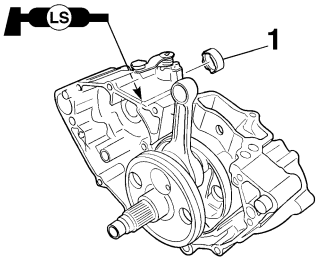

5. Install:
   - Main axle “1”
   - Drive axle “2”

TIP

- Install to the left crankcase simultaneously.
- Apply engine oil to the main axle and the drive axle bearing.

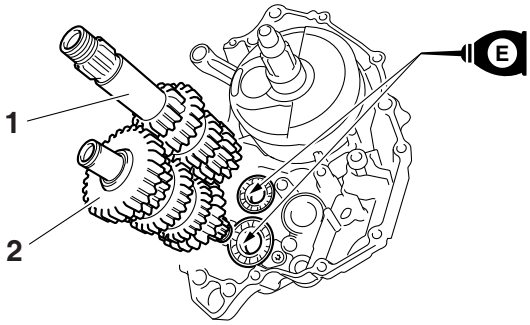

6. Install:
   - Shift fork 1 (L) “1”
   - Shift fork 2 (C) “2”
   - Shift fork 3 (R) “3”
   - Shift cam “4”
     (to the main axle and the drive axle)

TIP

- Apply engine oil to the shift fork grooves.
- Apply engine oil to the shift cam groove and the bearing contact surface.
- Mesh the shift fork 1 (L) with the 5th wheel gear “5” and “3” (R) with the 6th wheel gear “7” on the drive axle.
- Mesh the shift fork 2 (C) with the 3rd/4th pinion gear “6” on the main axle.

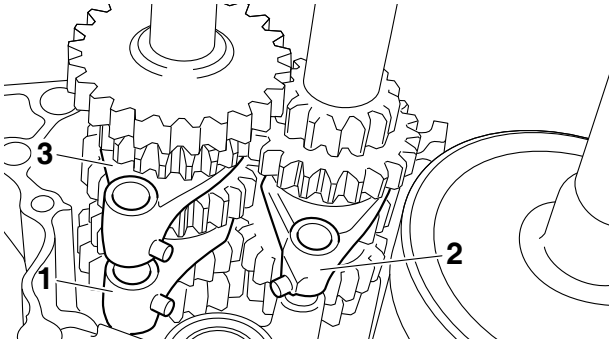

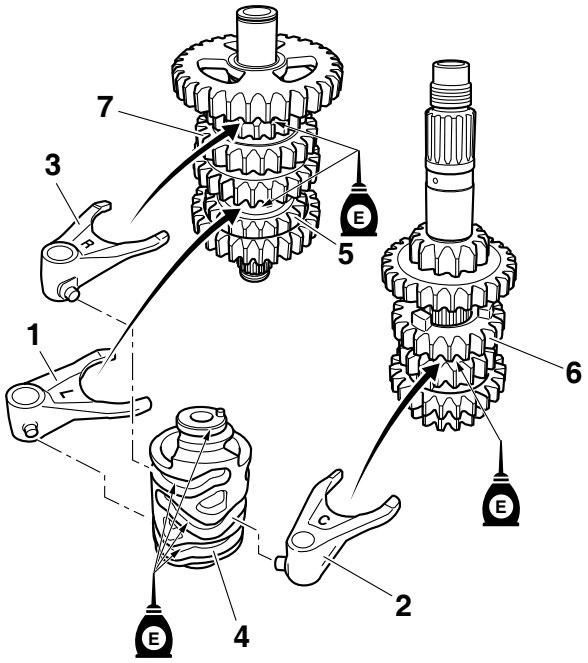

7. Install:
   - Long shift fork guide bar “1”
   - Short shift fork guide bar “2”
   - Spring “3”

TIP

- Screw the spring into the shift fork guide bar lightly beforehand.
- Apply the engine oil on the shift fork guide bars.

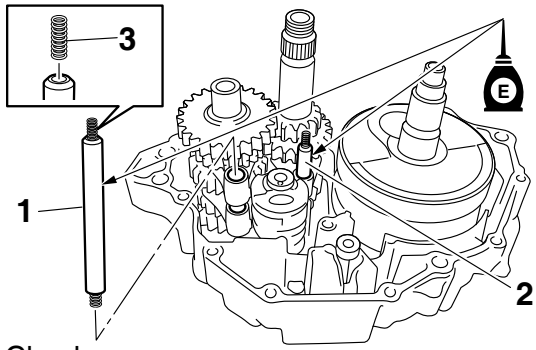

8. Check:
   - Operation of shift cam and shift fork
   - Transmission operation
     Unsmooth operation → Repair.

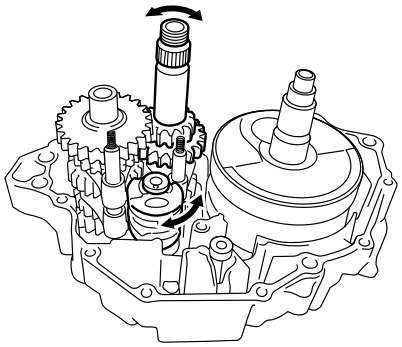

COOLING SYSTEM

TIP

This section is intended for those who have basic knowledge and skill concerning the servicing of Yamaha motorcycles (e.g., Yamaha dealers, service engineers, etc.). Those who have little knowledge and skill concerning servicing are requested not to undertake inspection, adjustment, disassembly, or reassembly only by reference to this manual. It may lead to servicing trouble and mechanical damage.

RADIATOR

Removing the radiator

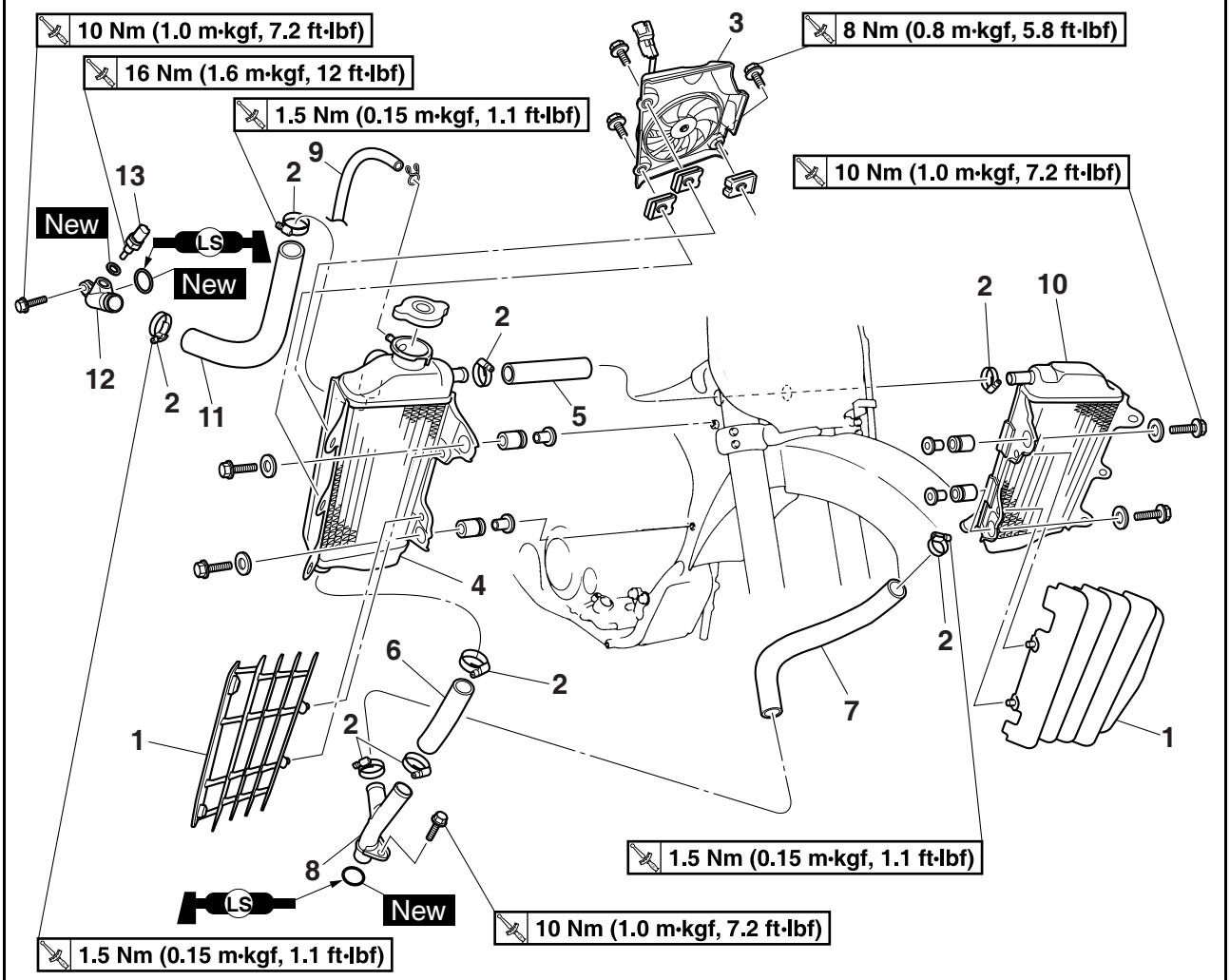

Order	Part name	Q'ty	Remarks
	Coolant		Drain. Refer to "CHANGING THE COOLANT" on page 3-10.
	Seat		Refer to "GENERAL CHASSIS" on page 5-1.
	Side cover (left/right)		Refer to "GENERAL CHASSIS" on page 5-1.
	Air scoop (left / right)		Refer to "GENERAL CHASSIS" on page 5-1.
	Fuel tank		Refer to "FUEL TANK" on page 8-1.
	Air filter case		Refer to "THROTTLE BODY" on page 8-7.
1	Radiator guard	2	
2	Radiator hose clamp	8	Loosen.
3	Radiator fan	1	

Removing the radiator

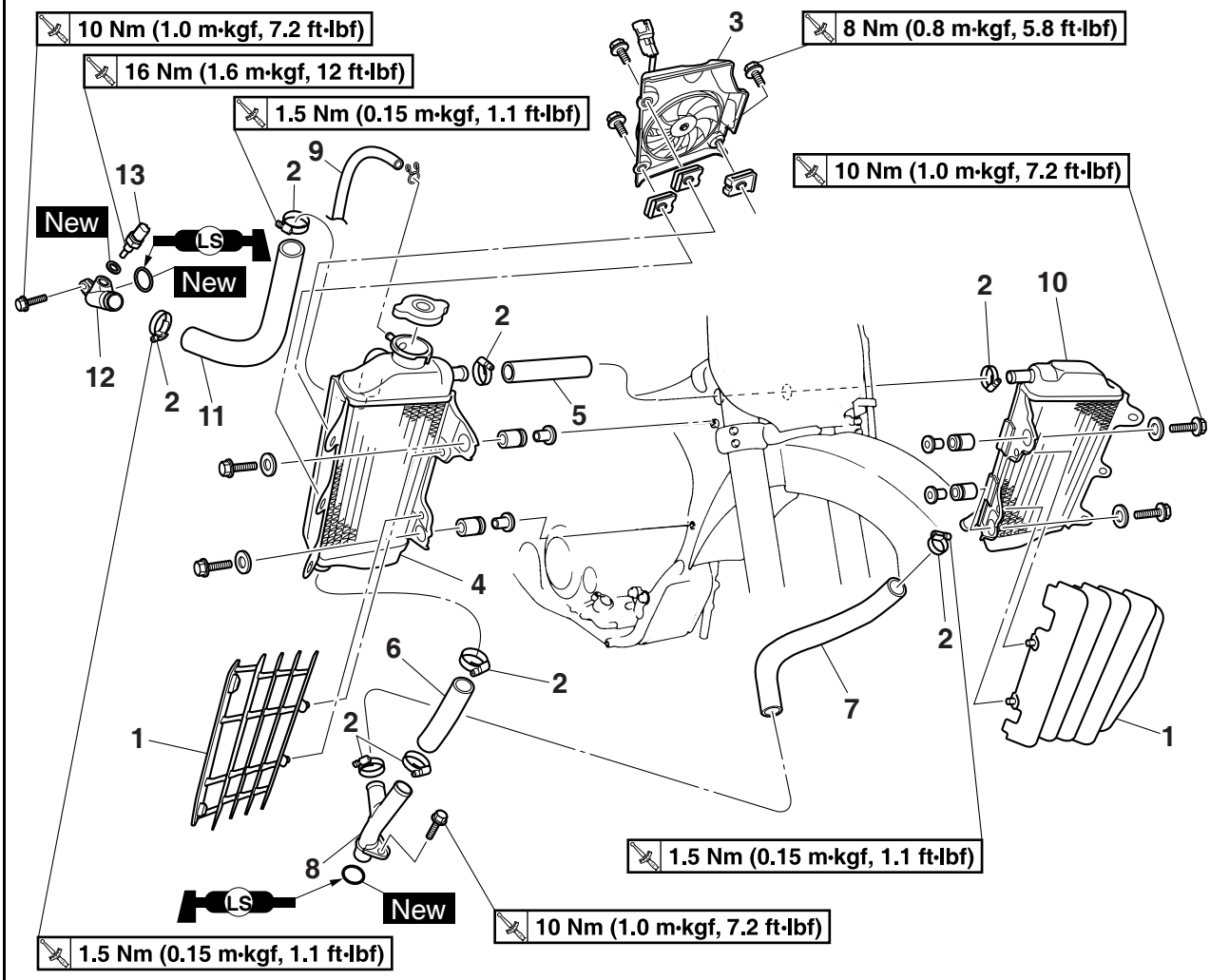

Order	Part name	Q'ty	Remarks
4	Right radiator	1	
5	Radiator hose 2	1	
6	Radiator hose 3	1	
7	Radiator hose 4	1	
8	Radiator pipe 2	1	
9	Radiator breather hose	1	
10	Left radiator	1	
11	Radiator hose 1	1	
12	Radiator pipe 1	1	
13	Coolant temperature sensor	1	
			For installation, reverse the removal procedure.

HANDLING NOTE

WARNING

If coolant seems hot, do not remove the radiator cap.

CHECKING THE RADIATOR

1. Check:
   - Radiator fins “1”
     Obstructions → Clean.
     Apply compressed air to the rear of the radiator.
     Damage → Repair or replace.

TIP

Correct any flattened fins with a thin, flat-head screwdriver.

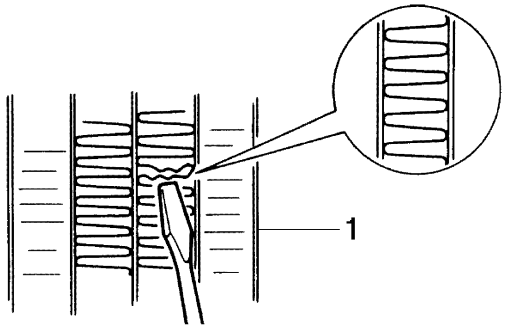

2. Check:
   - Radiator hoses
   - Radiator pipes
     Crack/damage → Replace.

WATER PUMP

Removing the water pump

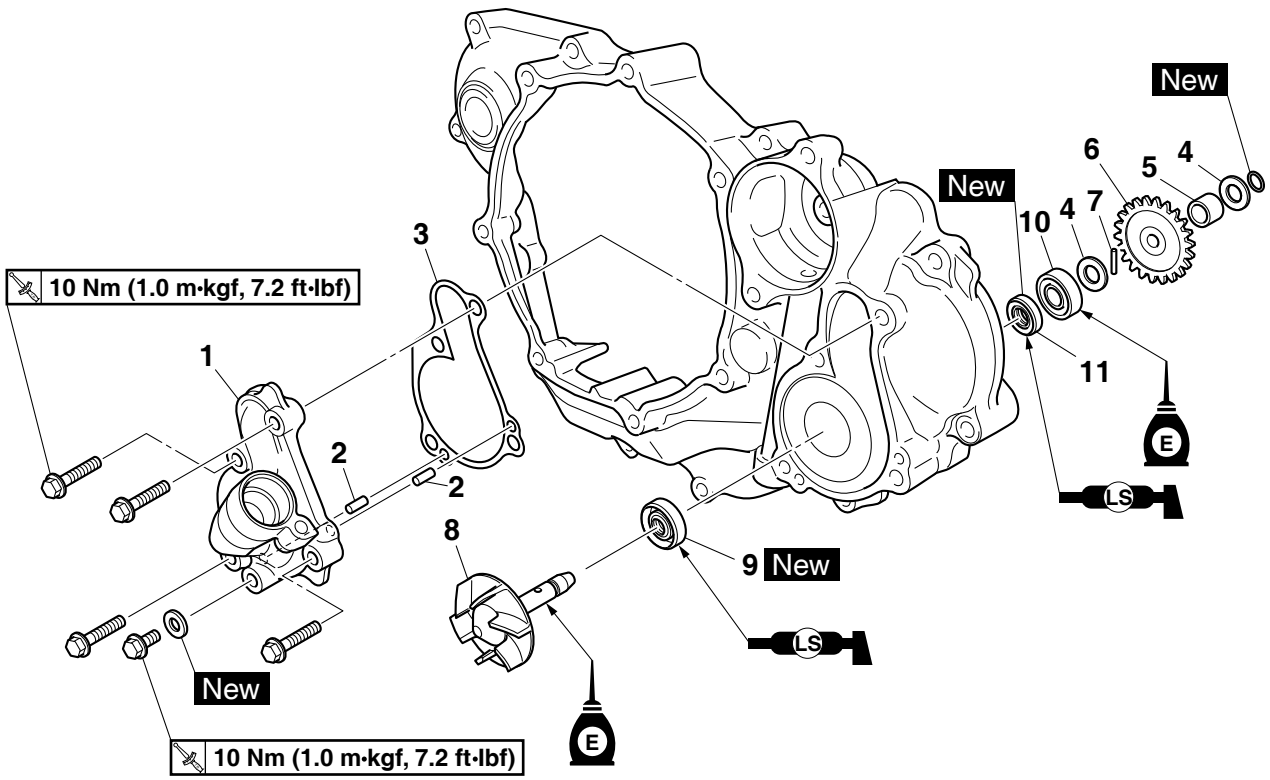

Order	Part name	Q'ty	Remarks
	Coolant		Drain. Refer to "CHANGING THE COOLANT" on page 3-10.
	Engine oil		Drain. Refer to "CHANGING THE ENGINE OIL" on page 3-17.
	Right crankcase cover		Refer to "CLUTCH" on page 6-40.
1	Water pump housing	1	
2	Dowel pin	2	
3	Gasket	1	
4	Washer	2	
5	Collar	1	
6	Gear	1	
7	Pin	1	
8	Impeller shaft assembly	1	
9	Oil seal	1	
10	Bearing	1	
11	Oil seal	1	

Removing the water pump

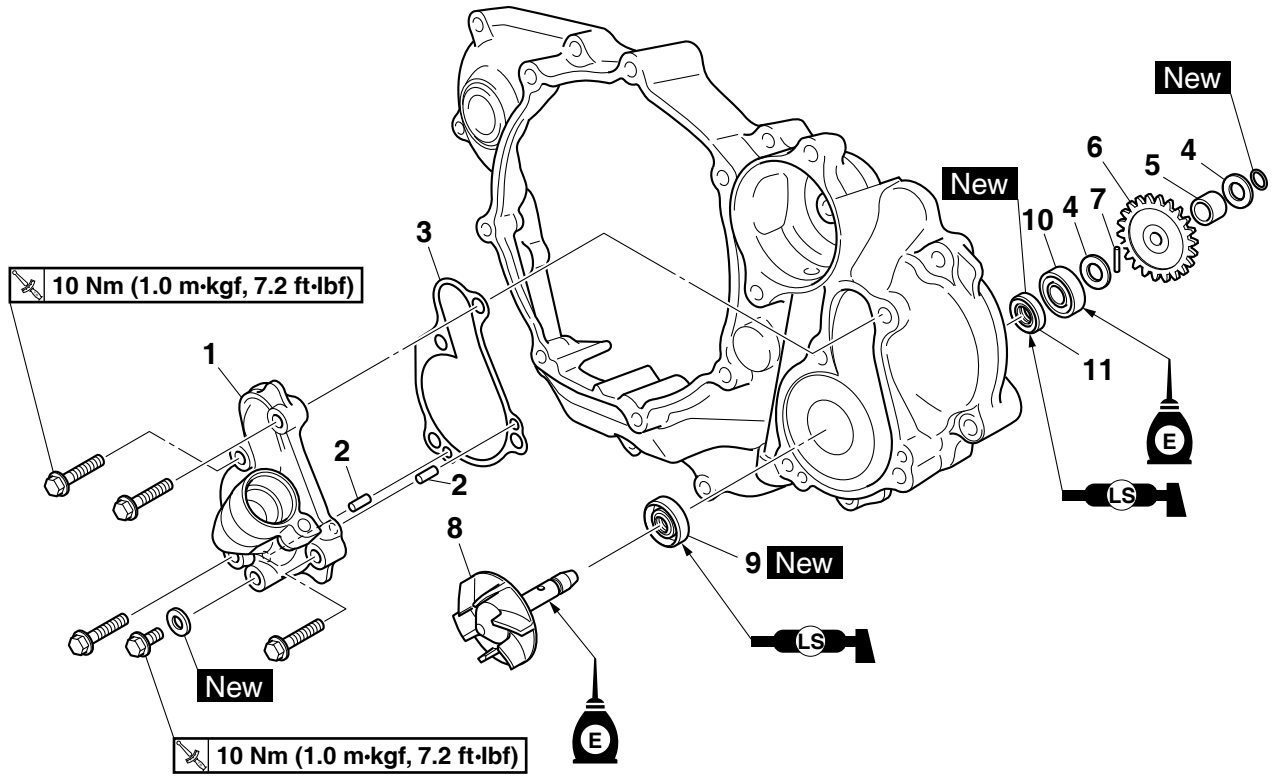

Order	Part name	Q'ty	Remarks
			For installation, reverse the removal procedure.

REMOVING THE OIL SEAL

TIP

- Remove the oil seal when the coolant level changes frequently more than usual, coolant has discolored, or engine oil has become milky.
- Do not use the removed oil seal.

1. Remove:
   - Oil seals “1”

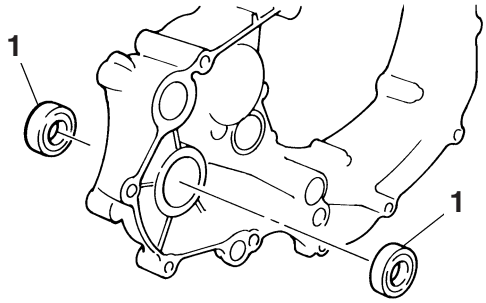

CHECKING THE WATER PUMP

1. Check:
   - Water pump housing cover
   - Impeller shaft
     Cracks/damage/wear → Replace.

CHECKING THE BEARING

1. Check:
   - Bearing
     Rotate the inner race with your finger.
     Rough spot/seizure → Replace.

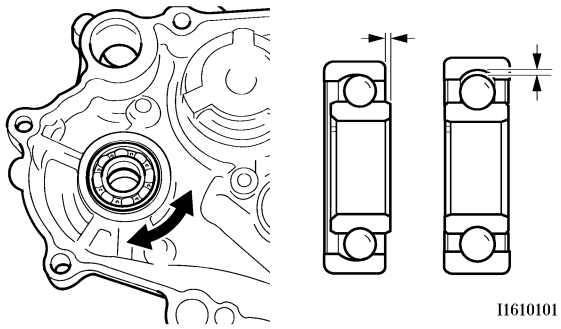

INSTALLING THE OIL SEAL

1. Install:
   - Oil seals “1” New

TIP

- Apply the lithium-soap-based grease on the oil seal lip.
- Install the oil seal with its manufacture’s marks or numbers facing the right crankcase cover “2”.

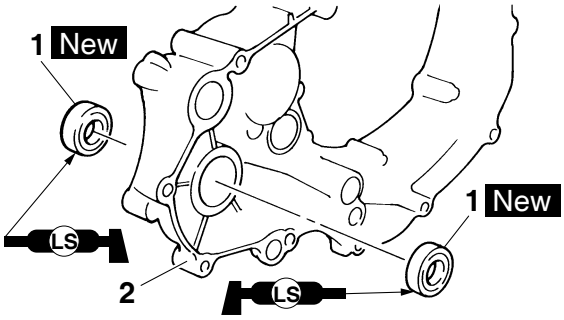

2. Install:
   - Bearing “1”

TIP

Install the bearing by pressing its outer race parallel.

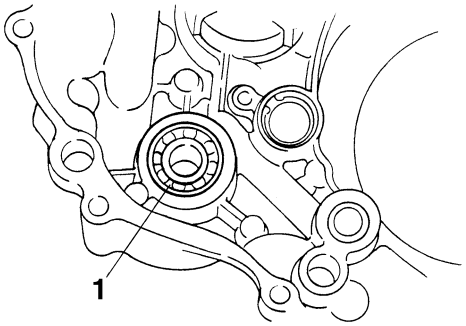

ASSEMBLING THE WATER PUMP

1. Install:
   - Impeller shaft assembly “1”
   - Washer “2”
   - Pin “3”
   - Gear “4”
   - Collar “5”
   - Circlip “6” New

TIP

- Take care so that the oil seal lip is not damaged or the spring does not slip off its position.
- When installing the impeller shaft, apply the engine oil to the oil seal lip, the bearing, and the impeller shaft.

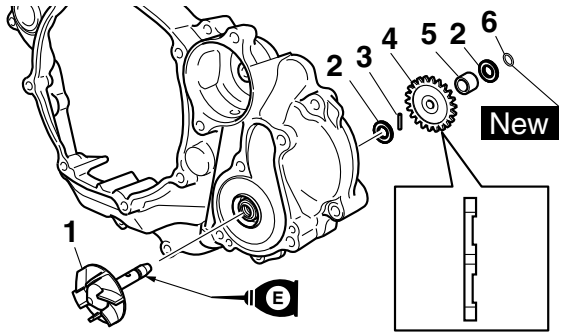

2. Install:
   - Dowel pin “1”
   - Gasket “2” New

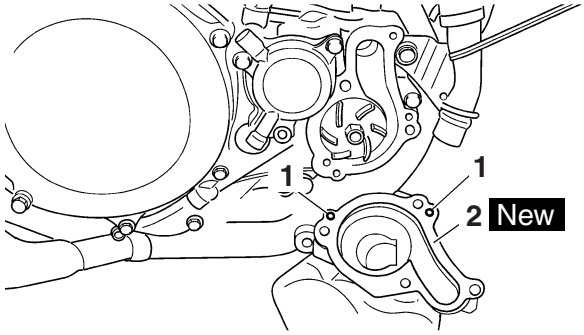

3. Install:
   - Water pump housing “1”
   - Water pump housing bolt “2”

	Water pump housing bolt **10 Nm (1.0 m·kgf, 7.2 ft·lbf)**

   - Washer “3” New
   - Coolant drain bolt “4”

	Coolant drain bolt **10 Nm (1.0 m·kgf, 7.2 ft·lbf)**

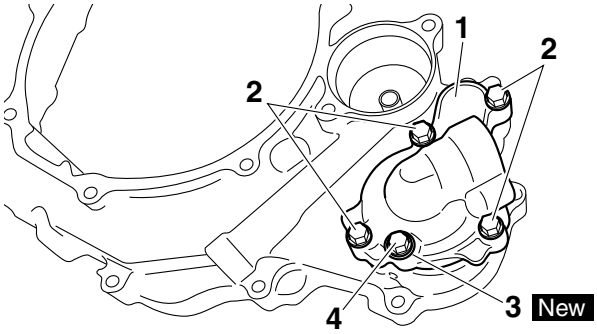

FUEL SYSTEM

TIP

This section is intended for those who have basic knowledge and skill concerning the servicing of Yamaha motorcycles (e.g., Yamaha dealers, service engineers, etc.). Those who have little knowledge and skill concerning servicing are requested not to undertake inspection, adjustment, disassembly, or reassembly only by reference to this manual. It may lead to servicing trouble and mechanical damage.

FUEL TANK

Removing the fuel tank

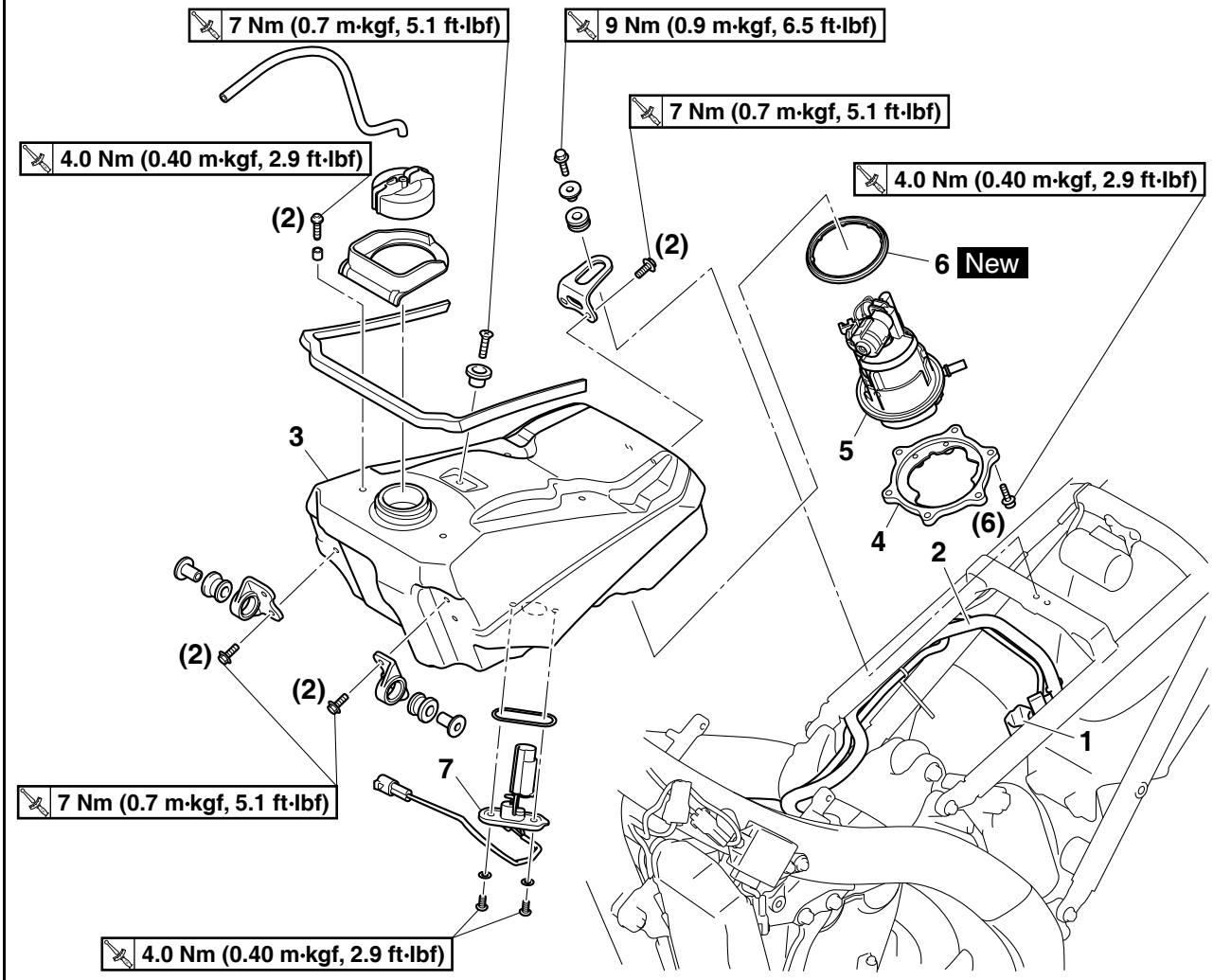

Order	Part name	Q'ty	Remarks
	Seat		Refer to "GENERAL CHASSIS" on page 5-1.
	Side cover (left/right)		
	Air scoop (left/right)		
1	Fuel pump coupler	1	Disconnect.
2	Fuel hose	1	Disconnect.
3	Fuel tank	1	
4	Fuel pump bracket	1	
5	Fuel pump	1	
6	Fuel pump gasket	1	
7	Fuel sender	1	

Removing the fuel tank

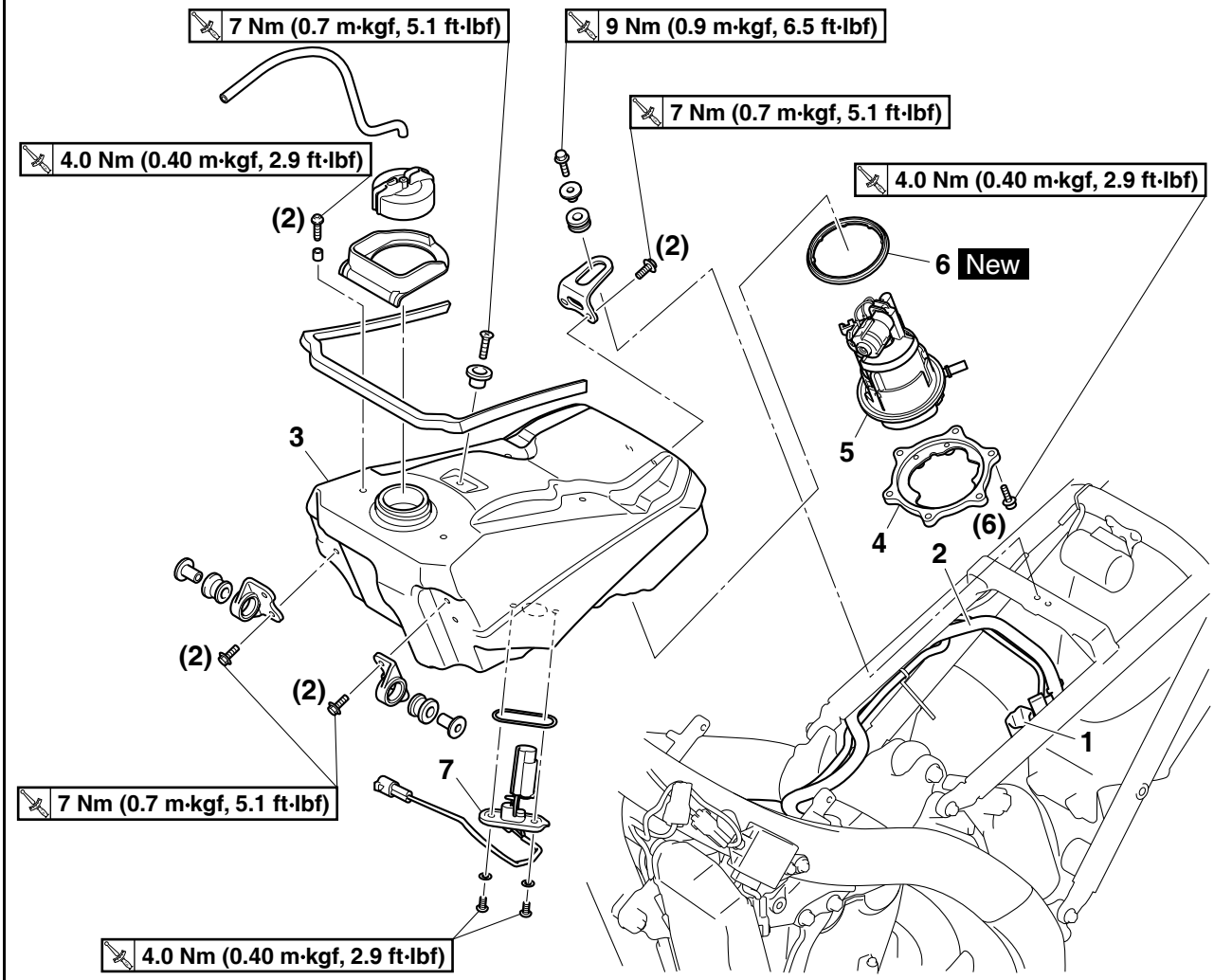

Order	Part name	Q'ty	Remarks
			For installation, reverse the removal procedure.

REMOVING THE FUEL TANK

1. Extract the fuel in the fuel tank through the fuel tank cap with a pump.
2. Remove:
   - Fuel hose coupler

WARNING

Cover the fuel hose connection with a cloth when disconnecting it. This is because residual pressure in the fuel hose could cause fuel to spurt out when the hose is removed.

NOTICE

Make sure that the fuel hose is disconnected by hand. Do not forcefully disconnect the hose with tools.

TIP

- To disconnect the fuel hose from the fuel tank, remove the fuel hose connector holder “a”, and then slide the fuel hose connector cover.
- To remove the fuel hose from the fuel rail, slide the fuel hose connector cover “1” on the end of the hose in the direction of the arrow shown, press the two buttons “2” on the sides of the connector, and then remove the hose.
- Before removing the hose, place a few cloths in the area under where it will be removed.
- To prevent sand, dust, and other foreign materials from entering the fuel pump, install the included fuel hose joint cover 1 “3” and the fuel hose joint cover 2 “4” onto the disconnected fuel hose and the fuel pump.

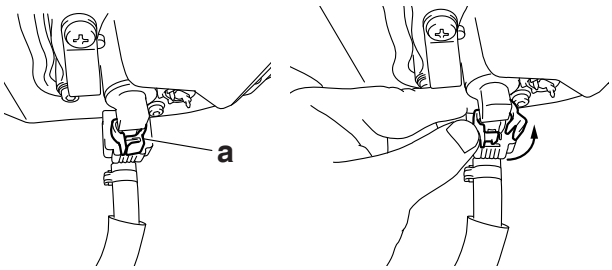

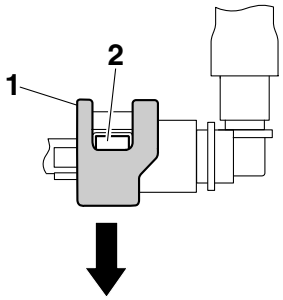

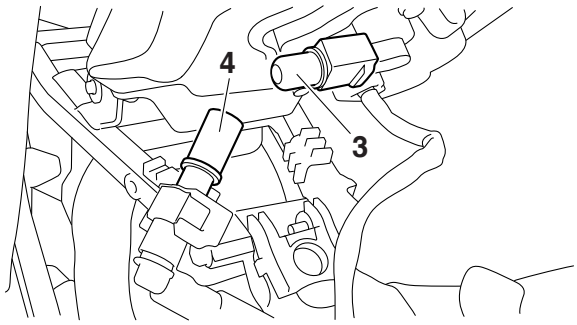

3. Remove:
   - Side cover (left/right)
   - Seat
   - Air scoop (left/right)
   - Fuel tank

TIP

Do not set the fuel tank down on the installation surface of the fuel pump. Be sure to lean the fuel tank against a wall or the like.

REMOVING THE FUEL PUMP

1. Remove:
   - Fuel pump

NOTICE

Do not drop the fuel pump or give it a strong shock.

CHECKING THE FUEL PUMP BODY

1. Check:
   - Fuel pump body
     Obstructions → Clean.
     Cracks/damage → Replace the fuel pump assembly.

INSTALLING THE FUEL PUMP

1. Install:
   - Fuel pump gasket New
   - Fuel pump
   - Fuel pump bracket

	Fuel pump bolts **4.0 Nm (0.40 m·kgf, 2.9 ft·lbf)**

TIP

- Take care not to damage the installation surfaces of the fuel tank.
- Always use a new fuel pump gasket.
- Install the lip on the fuel pump gasket upward.
- Install the fuel pump as shown in the figure.
- Align the projection “a” on the fuel pump with the slot “b” in the fuel pump bracket.
- Tighten the fuel pump bolts in the proper tightening sequence as shown.

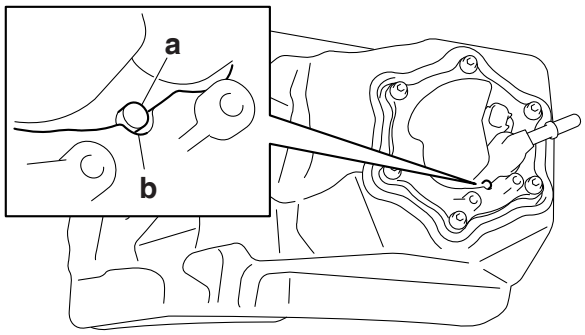

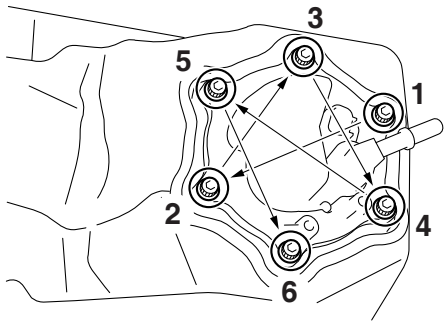

REMOVING THE FUEL SENDER

1. Remove:
   - Fuel sender

NOTICE

Do not drop the fuel sender or give it a strong shock.

CHECKING THE FUEL SENDER

1. Disconnect:
   - Fuel pump coupler
   - Fuel sender coupler
     (from the wire harness)
2. Disconnect:
   - Starter motor lead
     (from starter relay)
3. Remove:
   - Fuel tank
4. Remove:
   - Fuel sender
     (from the fuel tank)
5. Connect:
   - Fuel sender coupler
6. Push the start switch.
7. Check:
   - Fuel level warning light
     Out of specification → Replace the fuel sender.

Fuel pump is atmosphere "A"
→ Fuel level warning light is come on
Fuel pump is soaked in fuel "B"
→Fuel level warning light is goes off

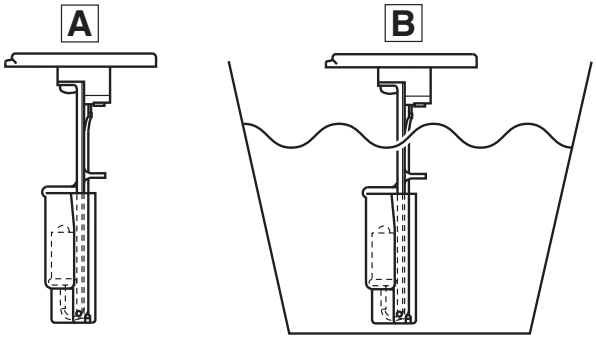

INSTALLING THE FUEL SENDER

1. Install:
   - Fuel sender gasket New
   - Fuel sender

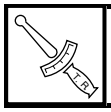	**Fuel sender bolts** **4.0 Nm (0.40 m·kgf, 2.9 ft·lbf)**

TIP

- Do not damage the installation surfaces of the fuel tank when installing the fuel sender.
- Always use a new fuel sender gasket.
- Install the fuel sender as shown in the illustration.
- When install the fuel sender, make sure that the projection "a" faces the rear of the vehicle.

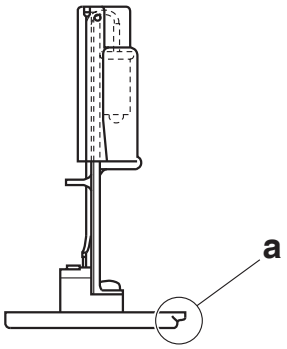

INSTALLING THE FUEL TANK

1. Install:
   - Fuel tank
2. Connect:
   - Fuel hose

NOTICE

- **Connect the fuel hose securely, and check that the orientation of the installed fuel hose holder is correct.**
- **Take care not to kink or pinch the fuel hose.**

TIP

- Insert the fuel hose into the fuel pipe securely until you hear a “click”.
- Slide the fuel hose connector cover “1” at the hose end in the direction of the arrow.
- Install the fuel hose connector holder “a”.
- Check that the fuel hose and the fuel pump lead are routed through the guide on the cover.

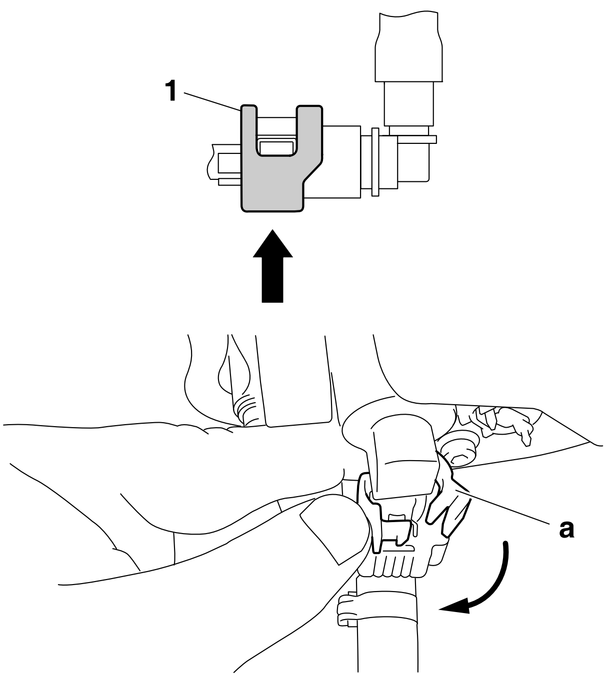

3. Connect:
   - Fuel pump coupler
4. Install:
   - Air scoop (left/right)
   - Seat
   - Side cover (left/right)
   Refer to “GENERAL CHASSIS” on page 5-1.

CHECKING THE FUEL PRESSURE

1. Check:
   - Fuel pressure

▼▼▼▼▼▼▼▼▼▼▼▼▼▼▼▼▼▼▼▼▼▼▼▼▼▼▼▼▼▼▼▼▼▼▼▼

a. Remove the side cover (left/right), the seat and the air scoop (left/right).
   Refer to “GENERAL CHASSIS” on page 5-1.
b. Remove the fuel tank bolt and lift the fuel tank.
c. Disconnect the fuel hose from the fuel pump.
   Refer to “REMOVING THE FUEL TANK” on page 8-3.

⚠ WARNING

Cover the fuel hose connection with a cloth when disconnecting it. This is because residual pressure in the fuel hose could cause fuel to spurt out when the hose is removed.

NOTICE

Make sure that the fuel hose is disconnected by hand. Do not forcibly disconnect the hose with tools.

d. Connect the pressure gauge “1” and the fuel pressure adapter “2” to the fuel hose.

Pressure gauge
90890-03153
Pressure gauge
YU-03153
Fuel pressure adapter
90890-03186
Fuel pressure adapter
YM-03186

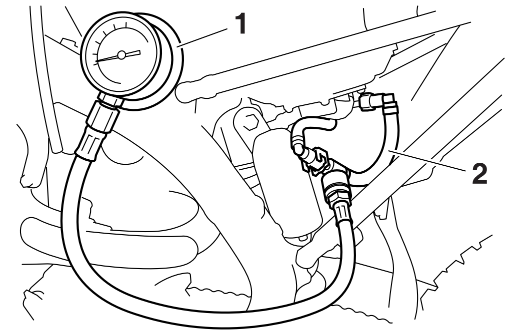

e. Start the engine.
f. Measure the fuel pressure.
   Out of specification → Replace the fuel pump.

Fuel line pressure at idling
324.0 kPa (3.24 kgf/cm^2, 47.0 psi)

▲▲▲▲▲▲▲▲▲▲▲▲▲▲▲▲▲▲▲▲▲▲▲▲▲▲▲▲▲▲▲▲▲▲

CHECKING THE DAMPER

1. Check:
   - Damper 1 “1”
   - Damper 2 “2”
   - Damper 3 “3”
   Wear/damage → Replace.

TIP

- Affix dampers 1 and 3 with the arrow on each damper pointing outward.
- Affix the damper 2 with its projection “a” facing the rear of the vehicle.

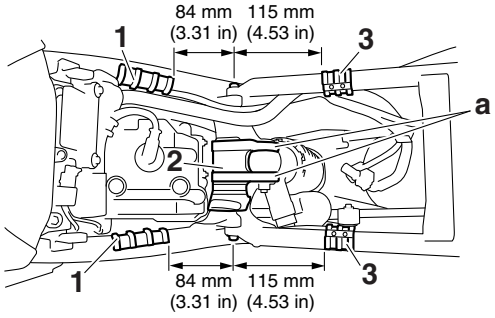

CHECKING AND REPLACING THE PROTECTOR

1. Check:
   - Protector "1"
     Wear/damage → Replace.

TIP

Affix the protector as shown.

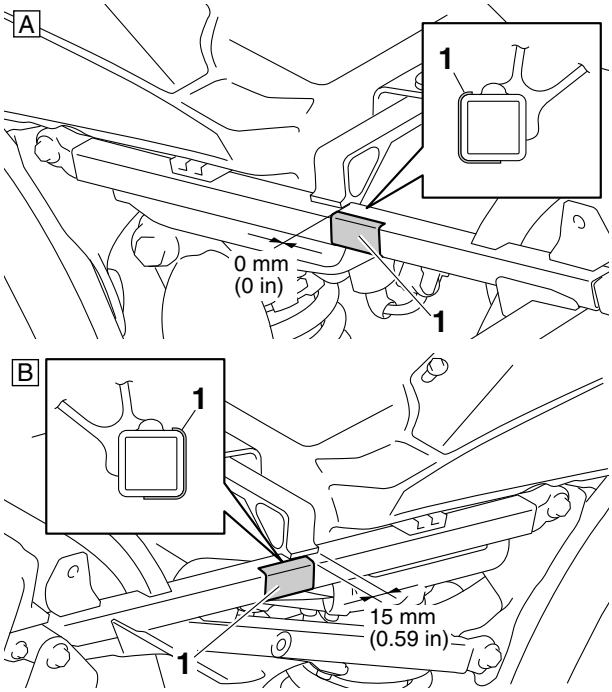

A. Left
B. Right

THROTTLE BODY

Removing the throttle body

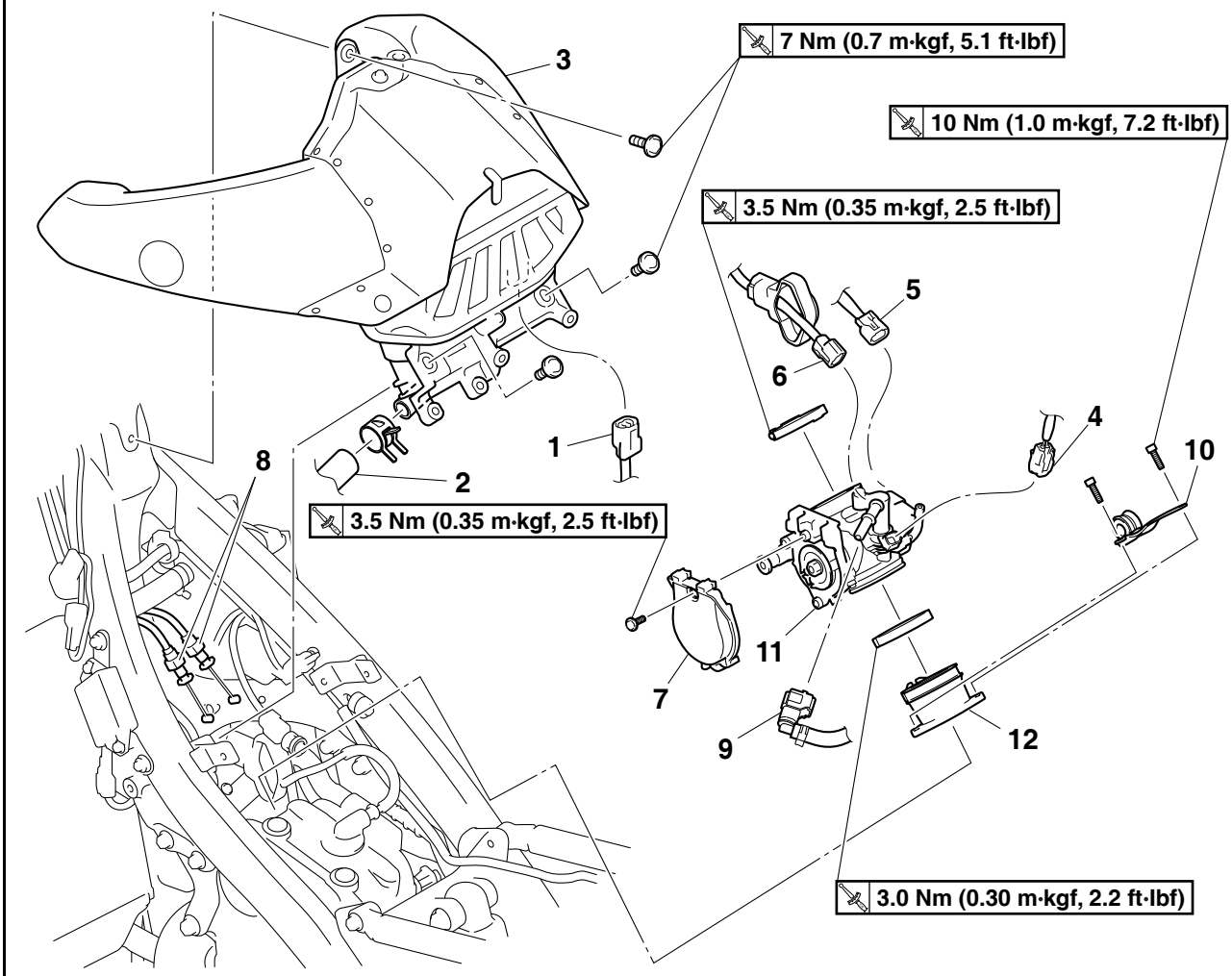

Order	Part name	Q'ty	Remarks
	Seat		Refer to "GENERAL CHASSIS" on page 5-1.
	Side cover (left/right)		Refer to "GENERAL CHASSIS" on page 5-1.
	Air scoop (left/right)		Refer to "GENERAL CHASSIS" on page 5-1.
	Fuel tank		Refer to "FUEL TANK" on page 8-1.
	ECU		Refer to "ENGINE REMOVAL" on page 6-1.
	Ignition coil		Refer to "ENGINE REMOVAL" on page 6-1.
1	Intake air temperature sensor coupler	1	Disconnect.
2	Breather hose 3	1	
3	Air filter case	1	
4	Fuel injector coupler	1	Disconnect.
5	Intake air pressure sensor coupler	1	Disconnect.
6	Throttle position sensor coupler	1	Disconnect.
7	Throttle cable cover	1	
8	Throttle cable	2	

Removing the throttle body

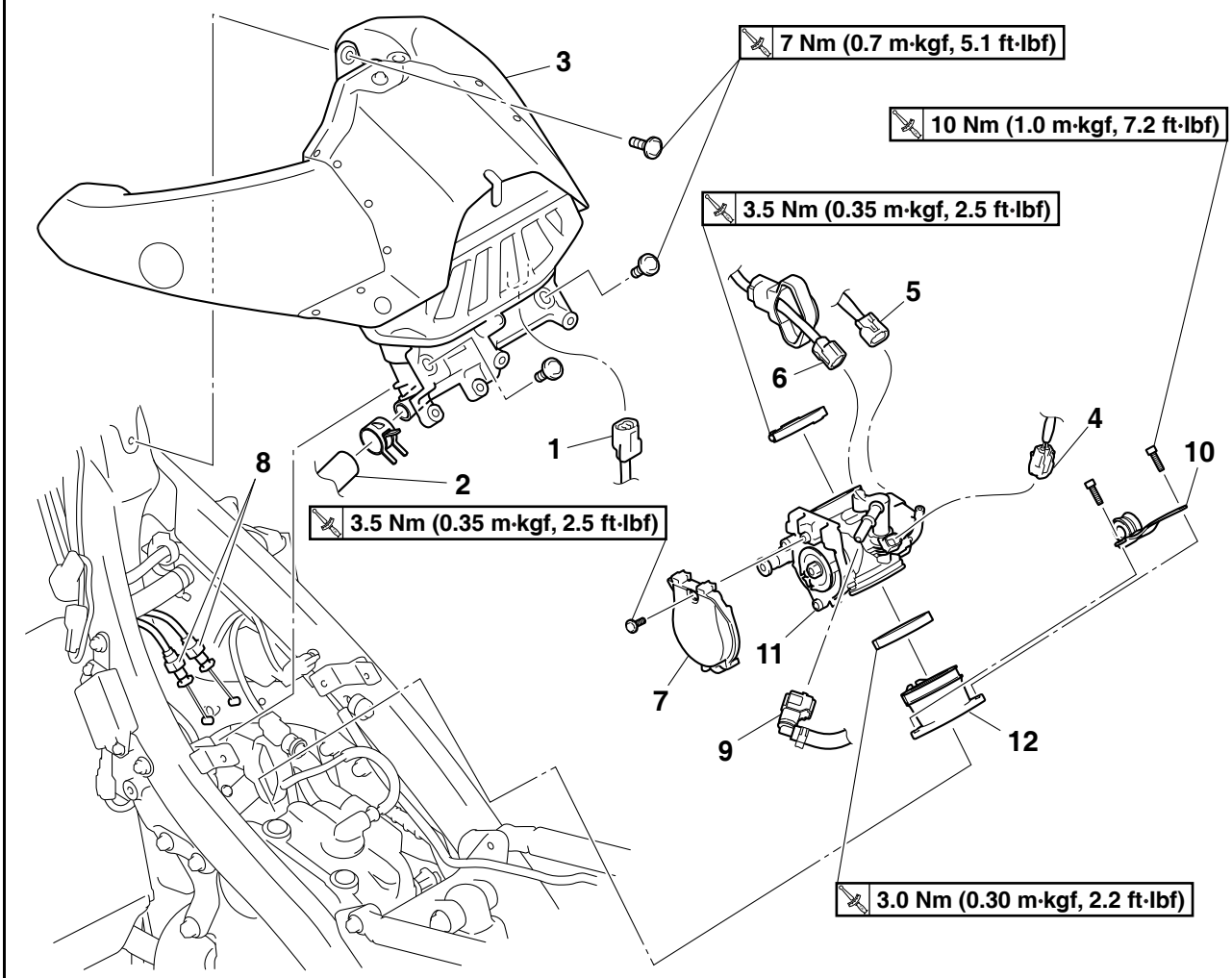

Order	Part name	Q'ty	Remarks
9	Fuel hose	1	
10	Exhaust pipe bracket	1	
11	Throttle body	1	
12	Throttle body joint	1	
			For installation, reverse the removal procedure.

Removing the injector

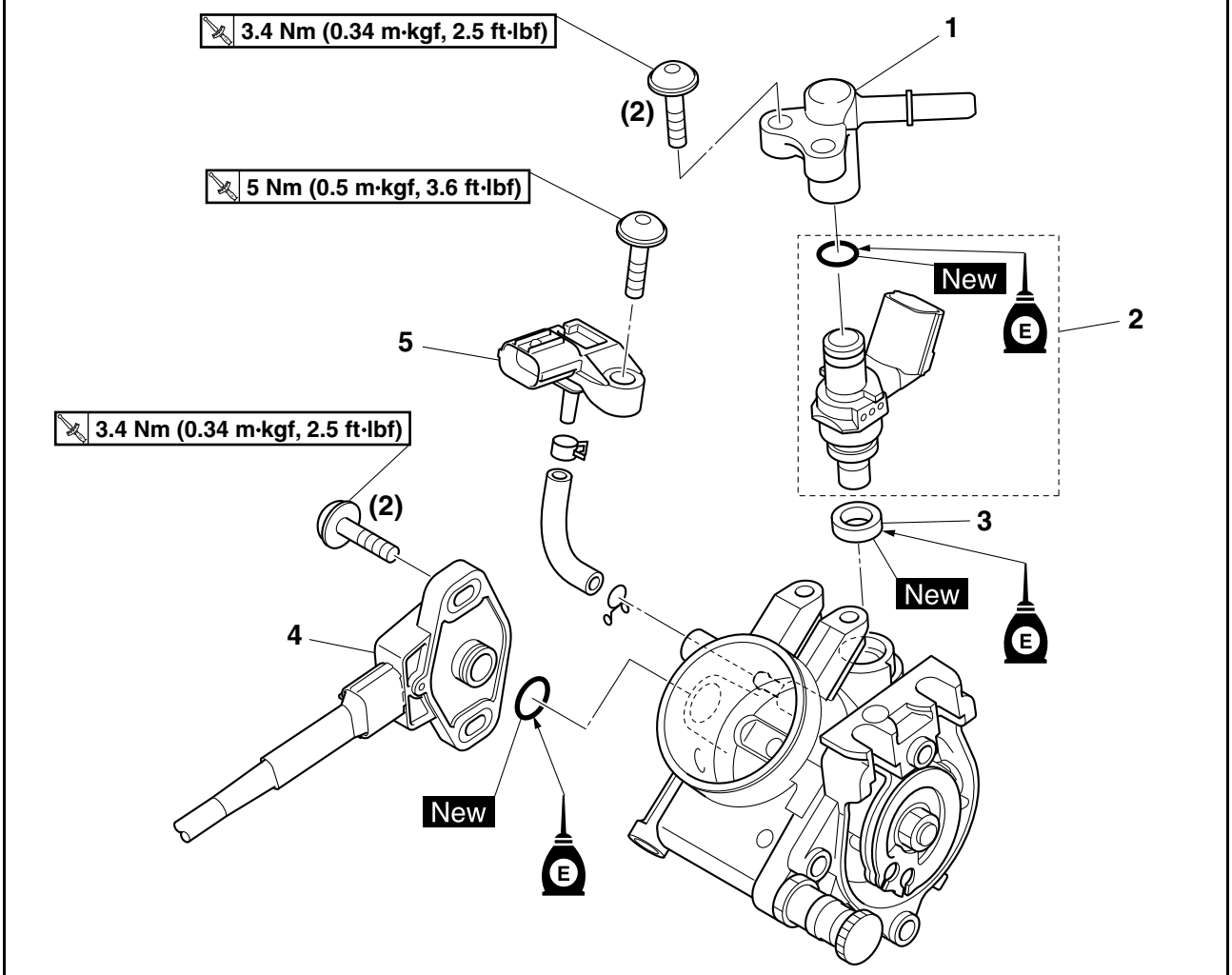

Order	Part name	Q'ty	Remarks
1	Fuel inlet pipe	1	
2	Injector	1	
3	Gaskets	1	
4	Throttle position sensor	1	
5	Intake air pressure sensor	1	
			For installation, reverse the removal procedure.

CHECKING THE INJECTOR

1. Check:
   - Injectors
     Obstruction → Replace, and check the fuel pump and the fuel injection system.
     Refer to “FUEL INJECTION SYSTEM” on page 9-28.
     Deposits → Replace.
     Damage → Replace.
2. Check:
   - Injector resistance
     Refer to “CHECKING THE FUEL INJECTOR” on page 9-81.

CHECKING THE THROTTLE BODY

1. Check:
   - Throttle body
     Cracks/damage → Replace.
2. Check:
   - Fuel passages
     Obstructions → Clean.

NOTICE

- **Before removing the throttle body, clean the area around the throttle body to prevent dirt and other foreign material from falling into the engine.**
- **If the throttle body is subject to strong shocks or dropped during cleaning, replace it.**
- **Do not use any caustic carburetor cleaning solution.**
- **Do not directly push the throttle valves to open them.**
- **Do not loosen the throttle valve stopper screw “1”, throttle valve pulley nut “2”, or throttle valve screw “3”. A loss of performance may occur.**
- **Do not use compressed air to clean the throttle body. Foreign materials may adhere to the intake air pressure sensor passage “a” and fuel injector “b” in the throttle body.**

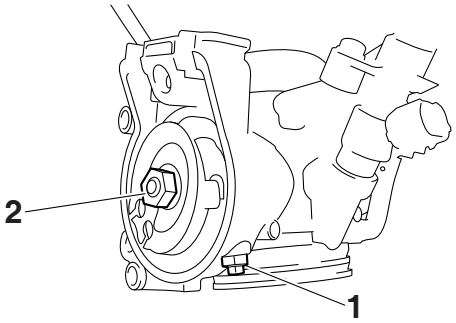

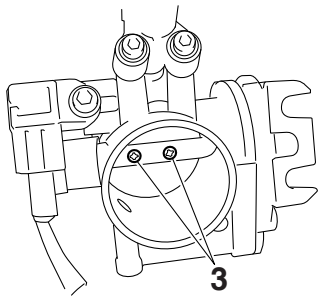

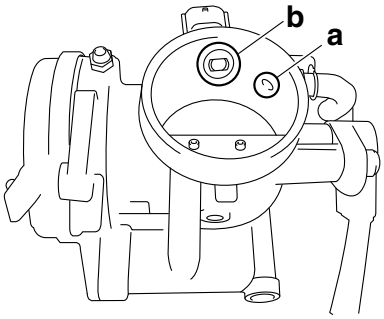

3. Check:
   - Starter knob/idle screw passage “c”
     Obstruction → Blow out with compressed air.

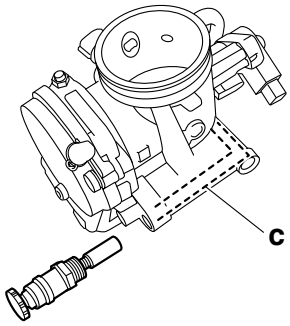

CHECKING THE THROTTLE BODY JOINT

1. Check:
   - Throttle body joint “1”
     Crack/damage → Replace.

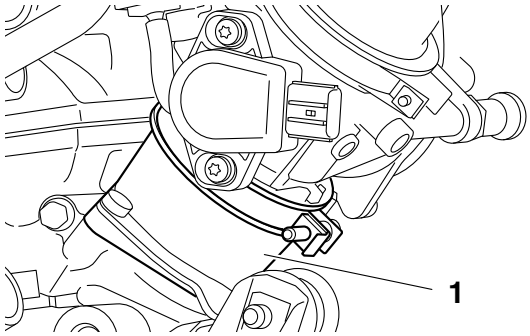

ADJUSTING THE THROTTLE POSITION SENSOR

WARNING

- **Handle the throttle position sensor with special care.**
- **Never subject the throttle position sensor to strong shocks. If the throttle position sensor is dropped, replace it.**

1. Check:
   - Throttle position sensor
     Refer to “CHECKING THE THROTTLE POSITION SENSOR” on page 9-79.
2. Adjust:
   - Throttle position sensor angle

▼▼▼▼▼▼▼▼▼▼▼▼▼▼▼▼▼▼▼▼▼▼▼▼▼▼▼▼▼▼▼▼▼▼

a. Connect the Yamaha diagnostic tool.
   Refer to “YAMAHA DIAGNOSTIC TOOL” on page 9-32.

	**Yamaha diagnostic tool** **90890-03231** **Yamaha diagnostic tool (US)** **90890-03234**

b. Temporary tighten the throttle position sensor.
c. Check that the throttle grip is fully closed.
d. Connect the throttle position sensor to the wire harness.
e. Set the Yamaha diagnostic tool to “diagnostic mode”.
f. Choose the diagnostic code No. “01”.
g. Adjust the throttle position sensor mounted angle until “11”–“14” appears on the Yamaha diagnostic tool.
h. After adjusting the throttle position sensor mounted angle, tighten the throttle position sensor screws “1”.

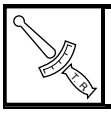	**Throttle position sensor screw** **3.4 Nm (0.34 m·kgf, 2.5 ft·lbf)**

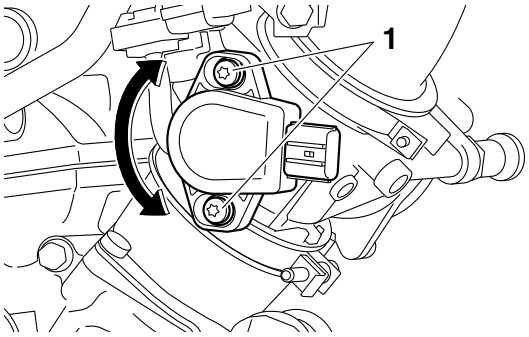

▲▲▲▲▲▲▲▲▲▲▲▲▲▲▲▲▲▲▲▲▲▲▲▲▲▲▲▲▲▲▲▲▲▲

ELECTRICAL SYSTEM

TIP

This section is intended for those who have basic knowledge and skill concerning the servicing of Yamaha motorcycles (e.g., Yamaha dealers, service engineers, etc.). Those who have little knowledge and skill concerning servicing are requested not to undertake inspection, adjustment, disassembly, or reassembly only by reference to this manual. It may lead to servicing trouble and mechanical damage.

IGNITION SYSTEM

CIRCUIT DIAGRAM

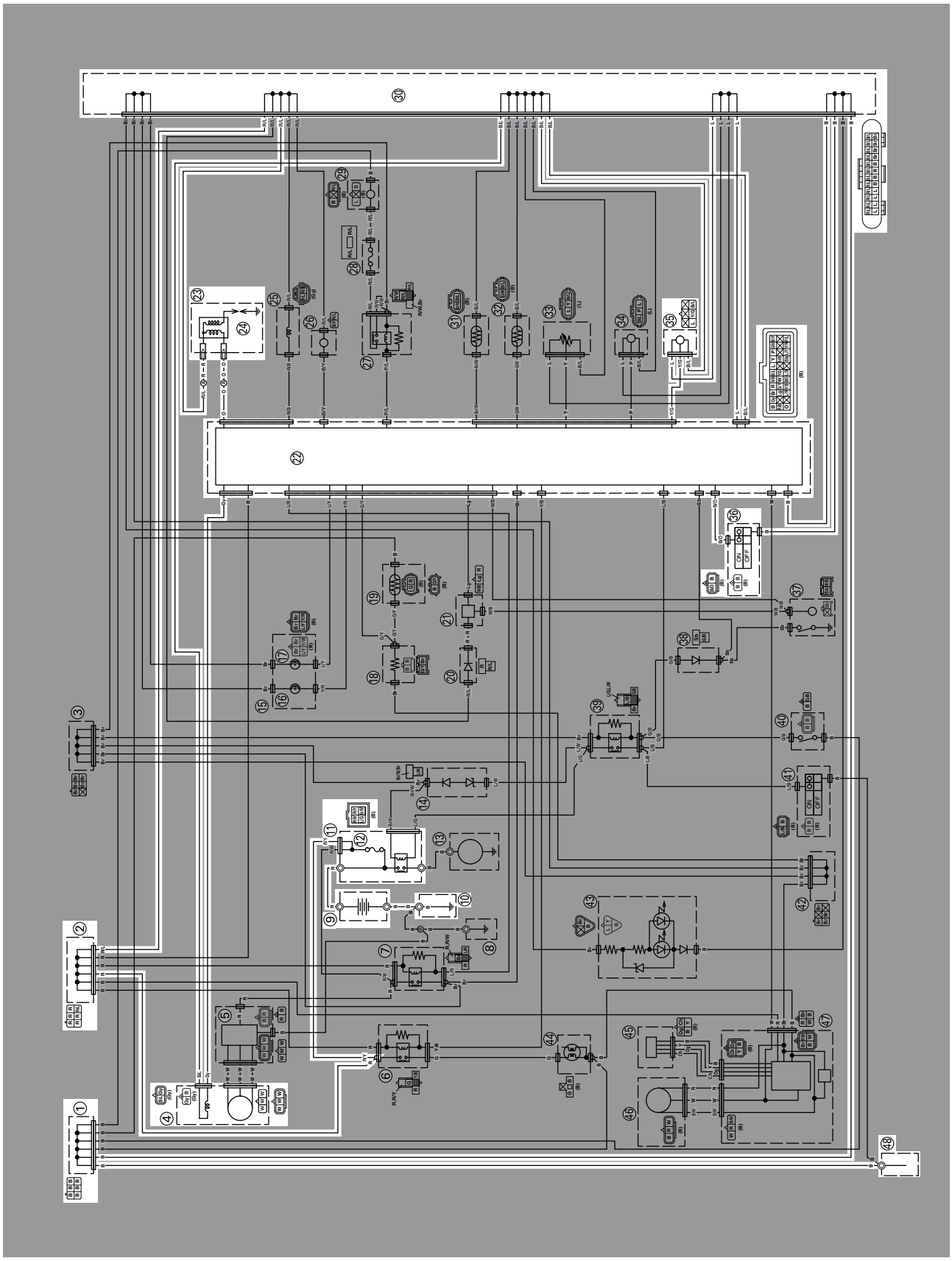

1. Joint connector
2. Joint connector
4. AC magneto
9. Battery
10. Frame ground
11. Starter relay
12. Main fuse
22. ECU (engine control unit)
23. Ignition coil
24. Spark plug
30. Joint connector
35. Lean angle sensor
36. Engine stop switch
48. Frame ground

TROUBLESHOOTING

The ignition system fails to operate (no spark or intermittent spark).

TIP

Before troubleshooting, remove the following part (s):
1. Seat
2. Side cover (left/right)
3. Air scoop (left/right)
4. Fuel tank
5. Fuel tank

1. Check the fuse. Refer to “CHECKING THE FUSES” on page 9-68.	NG →	Replace the fuse(s).
OK ↓		
2. Check the battery. Refer to “CHECKING AND CHARGING THE BATTERY” on page 9-69.	NG →	• Clean the battery terminals. • Recharge or replace the battery.
OK ↓		
3. Check the spark plug. Refer to “CHECKING THE FUSES” on page 9-68.	NG →	Re-gap or replace the spark plug.
OK ↓		
4. Check the ignition spark gap. Refer to “CHECKING THE IGNITION SPARK GAP” on page 9-73.	OK →	The ignition system is normal.
NG ↓		
5. Check the ignition coil. Refer to “CHECKING THE IGNITION COIL” on page 9-74.	NG →	Replace the ignition coil.
OK ↓		
6. Check the crankshaft position sensor. Refer to “CHECKING THE CRANKSHAFT POSITION SENSOR” on page 9-74.	NG →	Replace the stator assembly.
OK ↓		
7. Check the engine stop switch. Refer to “CHECKING THE SWITCHES” on page 9-64.	NG →	Replace the engine stop switch.
OK ↓		

8. Check the lean angle sensor. Refer to “CHECKING THE LEAN ANGLE SENSOR” on page 9-75.	NG →	Replace the lean angle sensor.
OK ↓		
9. Check the entire ignition system’s wiring. Refer to “CIRCUIT DIAGRAM” on page 9-2.	NG →	Properly connect or repair the ignition system’s wiring.
OK ↓		
Replace the ECU.		

ELECTRIC STARTING SYSTEM

CIRCUIT DIAGRAM

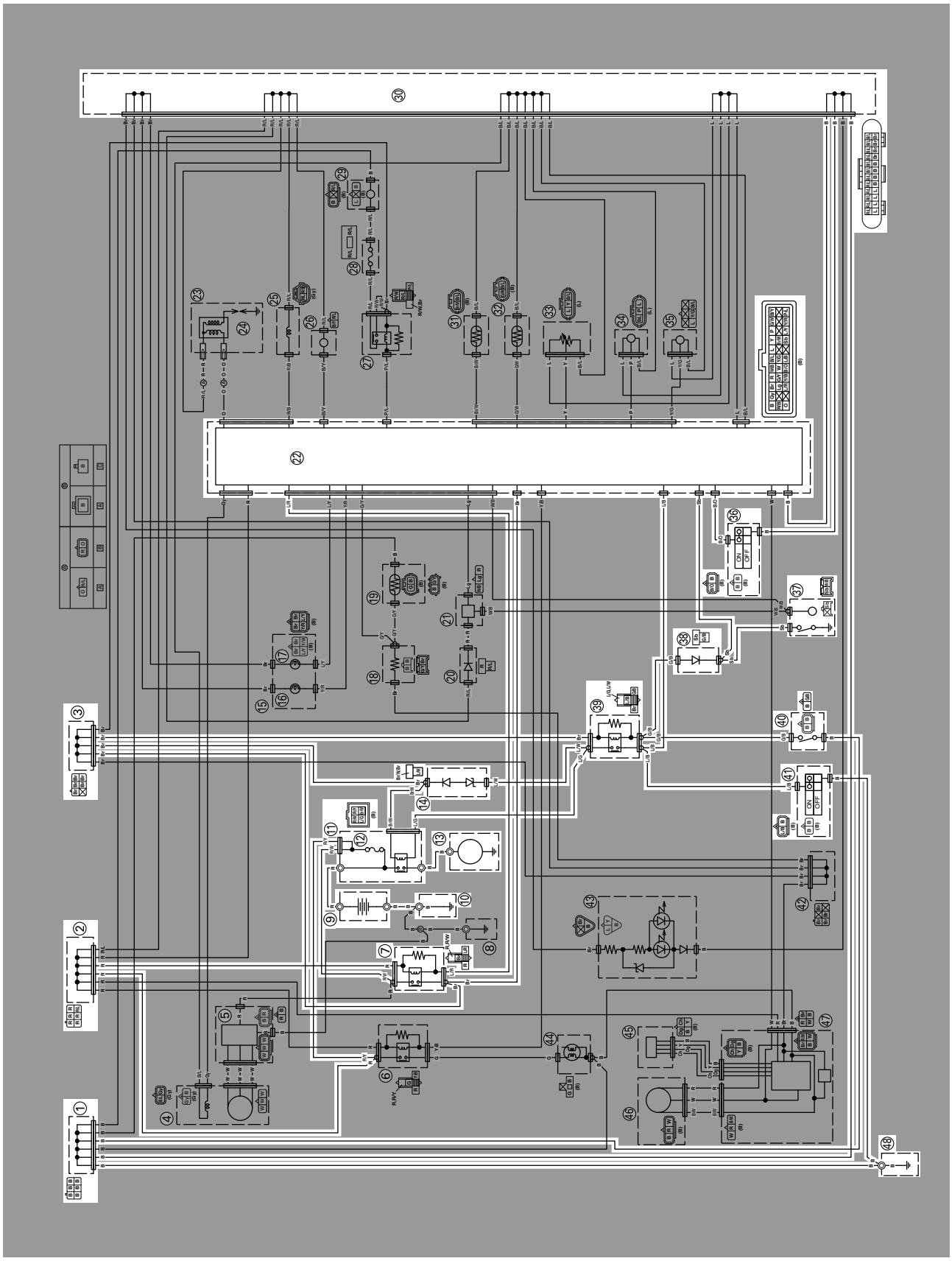

1. Joint connector
2. Joint connector
3. Joint connector
7. Main relay
9. Battery
10. Frame ground
11. Starter relay
12. Main fuse
13. Starter motor
14. Starter relay diode
22. ECU (engine control unit)
30. Joint connector
36. Engine stop switch
37. Neutral switch
38. Diode
39. Starting circuit cut-off relay
40. Clutch switch
41. Start switch
48. Frame ground

STARTING CIRCUIT CUT-OFF SYSTEM OPERATION

If the meter light comes on, the starter motor can only operate if at least one of the following conditions is met:

• The transmission is in neutral (the neutral switch is closed).

• The clutch lever is pulled to the handlebar (the clutch switch is closed).

The starting circuit cut-off relay prevents the starter motor from operating when neither of these conditions has been met. In this instance, the starting circuit cut-off relay is open so current cannot reach the starter motor. When at least one of the above conditions has been met the starting circuit cut-off relay is closed and the engine can be started by pressing the start switch.

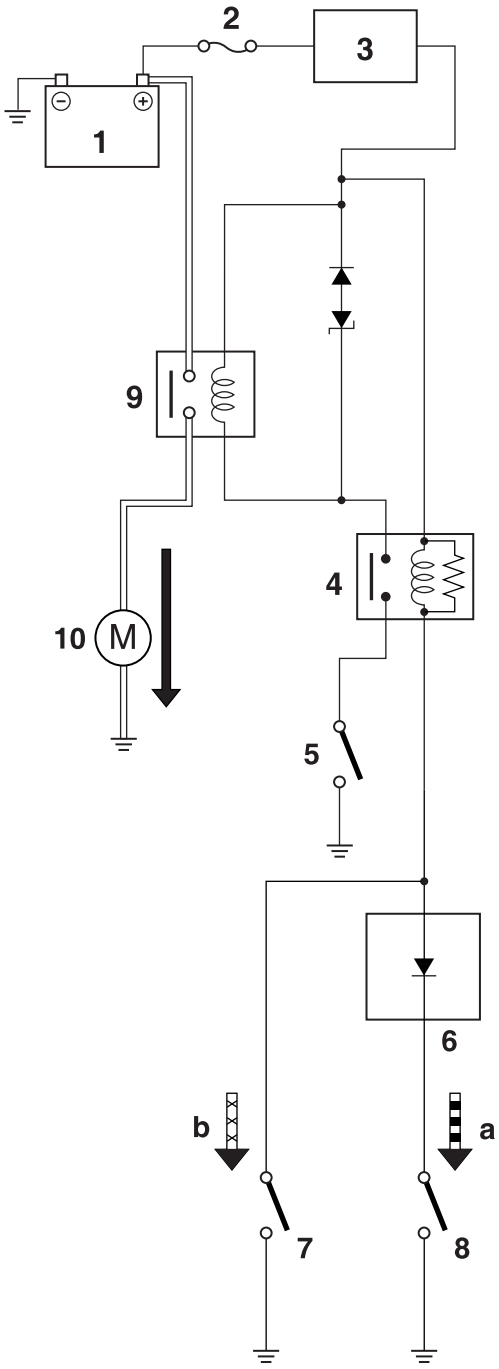

a. WHEN THE TRANSMISSION IS IN NEUTRAL
b. WHEN THE CLUTCH LEVER IS PULLED TO THE HANDLEBAR

1. Battery
2. Main fuse
3. Main relay
4. Starting circuit cut-off relay
5. Start switch
6. Diode
7. Clutch switch
8. Neutral switch
9. Starter relay
10. Starter motor

TROUBLESHOOTING

The starter motor fails to turn.

TIP

Before troubleshooting, remove the following part (s):
1. Seat
2. Side cover (left/right)
3. Air scoop (left/right)
4. Fuel tank
5. Fuel tank

1. Check the fuse. Refer to “CHECKING THE FUSES” on page 9-68.	NG →	Replace the fuse(s).
OK ↓		
2. Check the battery. Refer to “CHECKING AND CHARGING THE BATTERY” on page 9-69.	NG →	• Clean the battery terminals. • Recharge or replace the battery.
OK ↓		
3. Check the starter motor operation. Refer to “CHECKING THE STARTER MOTOR OPERATION” on page 9-75.	OK →	Starter motor is OK. Perform the electric starting system troubleshooting, starting with step 5.
NG ↓		
4. Check the starter motor. Refer to “CHECKING THE STARTER MOTOR” on page 6-37.	NG →	Repair or replace the starter motor.
OK ↓		
5. Check the relay unit (Starting circuit cut-off relay). Refer to “CHECKING THE RELAYS” on page 9-72.	NG →	Replace the relay unit.
OK ↓		
6. Check the diode. Refer to “CHECKING THE DIODE” on page 9-73.	NG →	Replace the diode.
OK ↓		
7. Check the starter relay. Refer to “CHECKING THE RELAYS” on page 9-72.	NG →	Replace the starter relay.
OK ↓		

8. Check the main relay.
   Refer to “CHECKING THE RELAYS” on page 9-72.

NG → Replace the main relay.

OK ↓

9. Check the neutral switch.
   Refer to “CHECKING THE SWITCHES” on page 9-64.

NG → Replace the neutral switch.

OK ↓

10. Check the clutch switch.
    Refer to “CHECKING THE SWITCHES” on page 9-64.

NG → Replace the clutch switch.

OK ↓

11. Check the engine stop switch.
    Refer to “CHECKING THE SWITCHES” on page 9-64.

NG → Replace the start switch.

OK ↓

12. Check the start switch.
    Refer to “CHECKING THE SWITCHES” on page 9-64.

NG → Replace the engine stop switch.

OK ↓

13. Check the entire starting system’s wiring.
    Refer to “CIRCUIT DIAGRAM” on page 9-6.

NG → Properly connect or repair the starting system’s wiring.

OK ↓

Replace the ECU.

CHARGING SYSTEM

CIRCUIT DIAGRAM

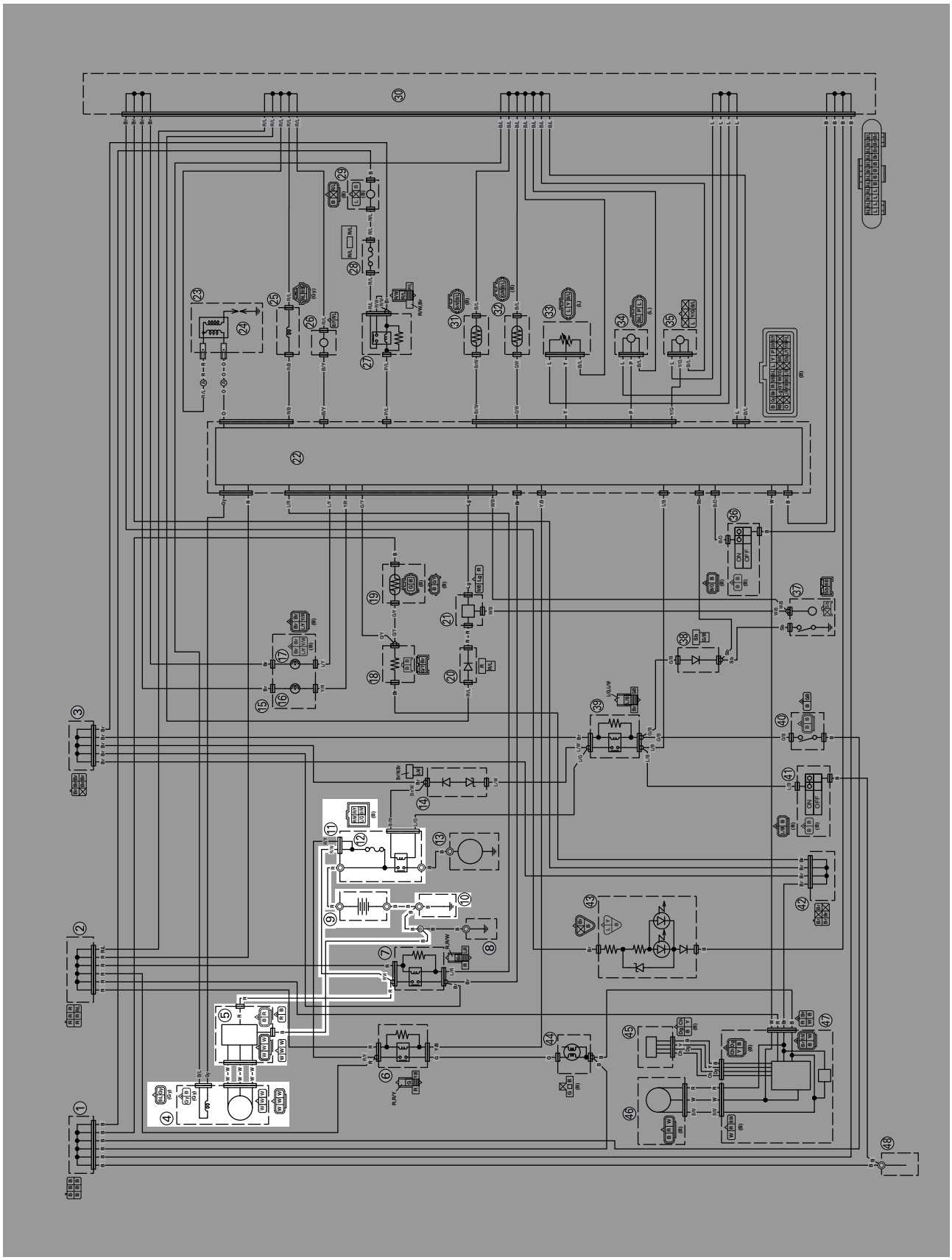

4. AC magneto
5. Rectifier/regulator
9. Battery
10. Frame ground
11. Starter relay
12. Main fuse

TROUBLESHOOTING

The battery is not being charged.

TIP

Before troubleshooting, remove the following part (s):
1. Seat
2. Side cover (left/right)

1. Check the fuse. Refer to "CHECKING THE FUSES" on page 9-68.	NG→	Replace the fuse(s).
OK↓		
2. Check the battery. Refer to "CHECKING AND CHARGING THE BATTERY" on page 9-69.	NG →	• Clean the battery terminals. • Recharge or replace the battery.
OK↓		
3. Check the stator coil. Refer to "CHECKING THE STATOR COIL" on page 9-76.	NG→	Replace the stator assembly.
OK↓		
4. Check the rectifier/regulator. Refer to "CHECKING THE RECTIFIER/REGULATOR" on page 9-76.	NG→	Replace the rectifier/regulator.
OK ↓		
5. Check the entire charging system's wiring. Refer to "CIRCUIT DIAGRAM" on page 9-12.	NG→	Properly connect or repair the charging system's wiring.
OK↓		
This circuit is OK.		

LIGHTING SYSTEM

CIRCUIT DIAGRAM

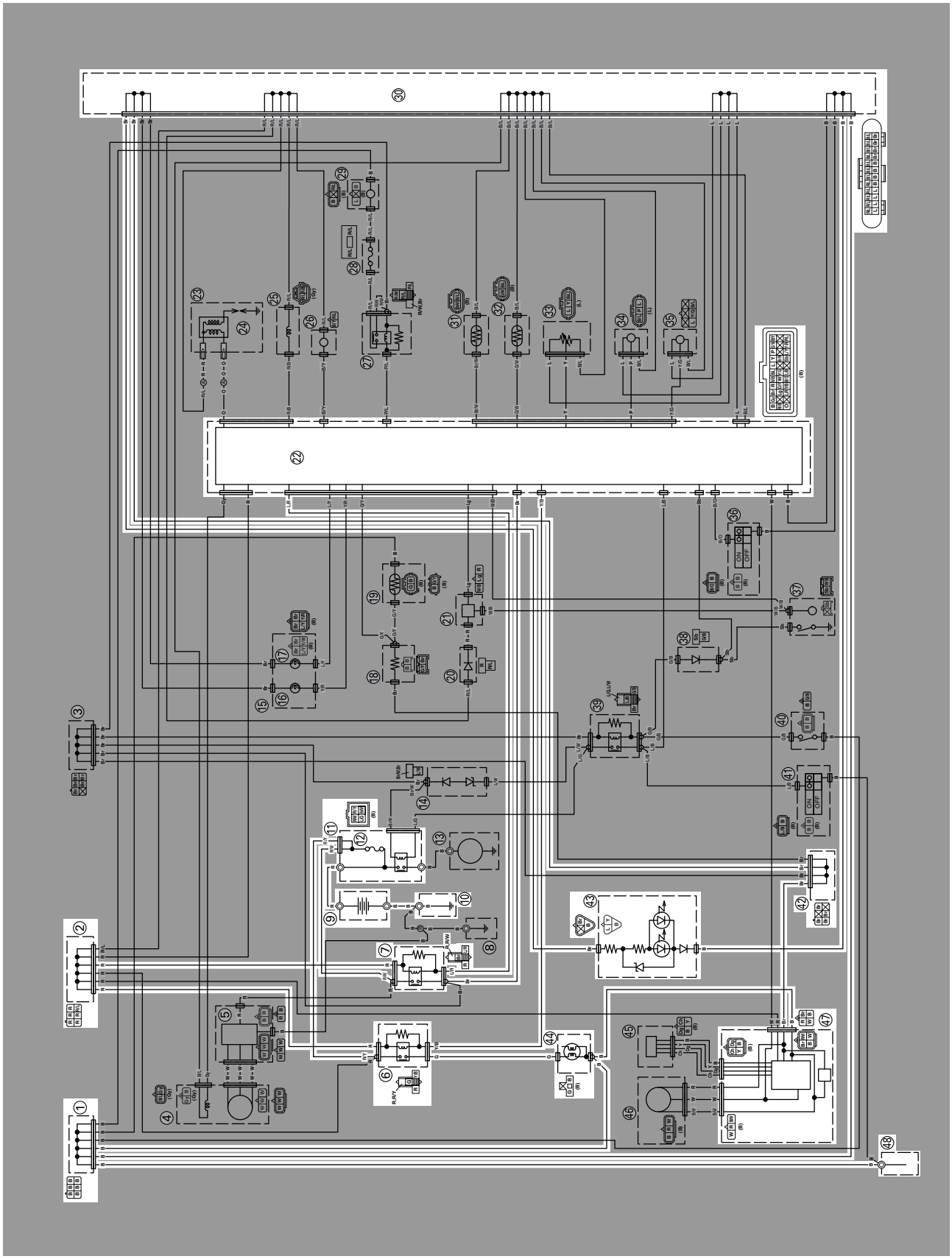

1. Joint connector
2. Joint connector
6. Headlight relay
7. Main relay
9. Battery
10. Frame ground
11. Starter relay
12. Main fuse
22. ECU (engine control unit)
30. Joint connector
42. Joint connector
43. Taillight
44. Headlight
47. Multi-function display
48. Frame ground

TROUBLESHOOTING

Any of the following fail to light: headlight or meter light.

TIP

Before troubleshooting, remove the following part (s):
1. Seat
2. Side cover (left)
3. Air scoop (left/right)
4. Fuel tank

1. Check the each bulbs condition. Refer to "CHECKING THE BULBS AND BULB SOCKETS" on page 9-67.	NG →	Replace the bulb (s).
OK ↓		
2. Check the fuse. Refer to "CHECKING THE FUSES" on page 9-68.	NG →	Replace the fuse(s).
OK ↓		
3. Check the battery. Refer to "CHECKING AND CHARGING THE BATTERY" on page 9-69.	NG →	• Clean the battery terminals. • Recharge or replace the battery.
OK ↓		
4. Check the main relay. Refer to "CHECKING THE RELAYS" on page 9-72.	NG →	Replace the main relay.
OK ↓		
5. Check the headlight relay. Refer to "CHECKING THE RELAYS" on page 9-72.	NG →	Replace the headlight relay.
OK ↓		
6. Check the entire lighting system's wiring. Refer to "CIRCUIT DIAGRAM" on page 9-16.	NG →	Properly connect or repair the lighting system's wiring.
OK ↓		
Replace the ECU, meter assembly, or taillight.		

SIGNALING SYSTEM

CIRCUIT DIAGRAM

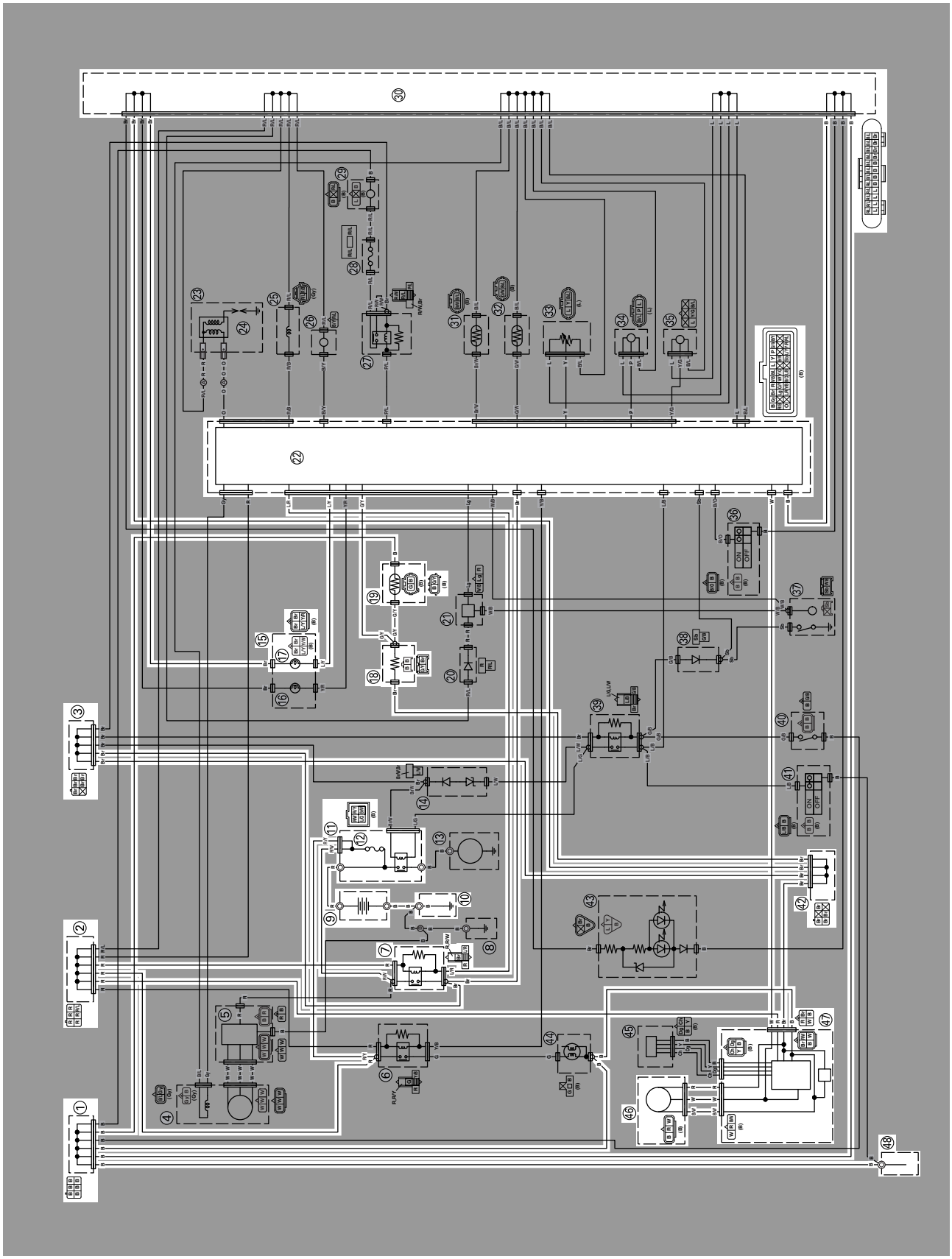

1. Joint connector
2. Joint connector
3. Joint connector
7. Main relay
9. Battery
10. Frame ground
11. Starter relay
12. Main fuse
15. Indicator light
17. Fuel level warning light
18. Resistor
19. Fuel sender
22. ECU (engine control unit)
30. Joint connector
42. Joint connector
46. Speed sensor
47. Multi-function display
48. Frame ground

TROUBLESHOOTING

- The speedometer does not operate normally.
- The fuel indicator light does not come on.

TIP

Before troubleshooting, remove the following part (s):
1. Seat
2. Side cover (left/right)
3. Air scoop (left/right)
4. Fuel tank

1. Check the fuse. Refer to "CHECKING THE FUSES" on page 9-68.	NG →	Replace the fuse(s).
OK ↓		
2. Check the battery. Refer to "CHECKING AND CHARGING THE BATTERY" on page 9-69.	NG →	• Clean the battery terminals. • Recharge or replace the battery.
OK ↓		
3. Check the main relay. Refer to "CHECKING THE RELAYS" on page 9-72.	NG →	Replace the main relay.
OK ↓		
4. Check the entire signaling system's wiring. Refer to "CIRCUIT DIAGRAM" on page 9-20.	NG →	Properly connect or repair the signaling system's wiring.
OK ↓		
This circuit is OK.		

Check the signaling system

The speedometer fails to operate.

1. Check the speed sensor. Refer to "CHECKING THE SPEED SENSOR" on page 9-77.	NG →	Replace the speed sensor.
OK ↓		
2. Check the entire signaling system's wiring. Refer to "CIRCUIT DIAGRAM" on page 9-20.	NG →	Properly connect or repair the signaling system's wiring.
OK ↓		
Replace the meter assembly.		

The fuel level warning light fails to come on.

1. Check the fuel sender.
   Refer to “CHECKING THE FUEL SENDER” on page 9-77.

NG → Replace the fuel sender assembly.

OK ↓

2. Check the resistor.
   Refer to “CHECKING THE RESISTER” on page 9-77.

NG → Replace the resistor.

OK ↓

3. Check the entire signaling system’s wiring.
   Refer to “CIRCUIT DIAGRAM” on page 9-20.

NG → Properly connect or repair the signaling system’s wiring.

OK ↓

Replace the indicator light assembly.

COOLING SYSTEM

CIRCUIT DIAGRAM

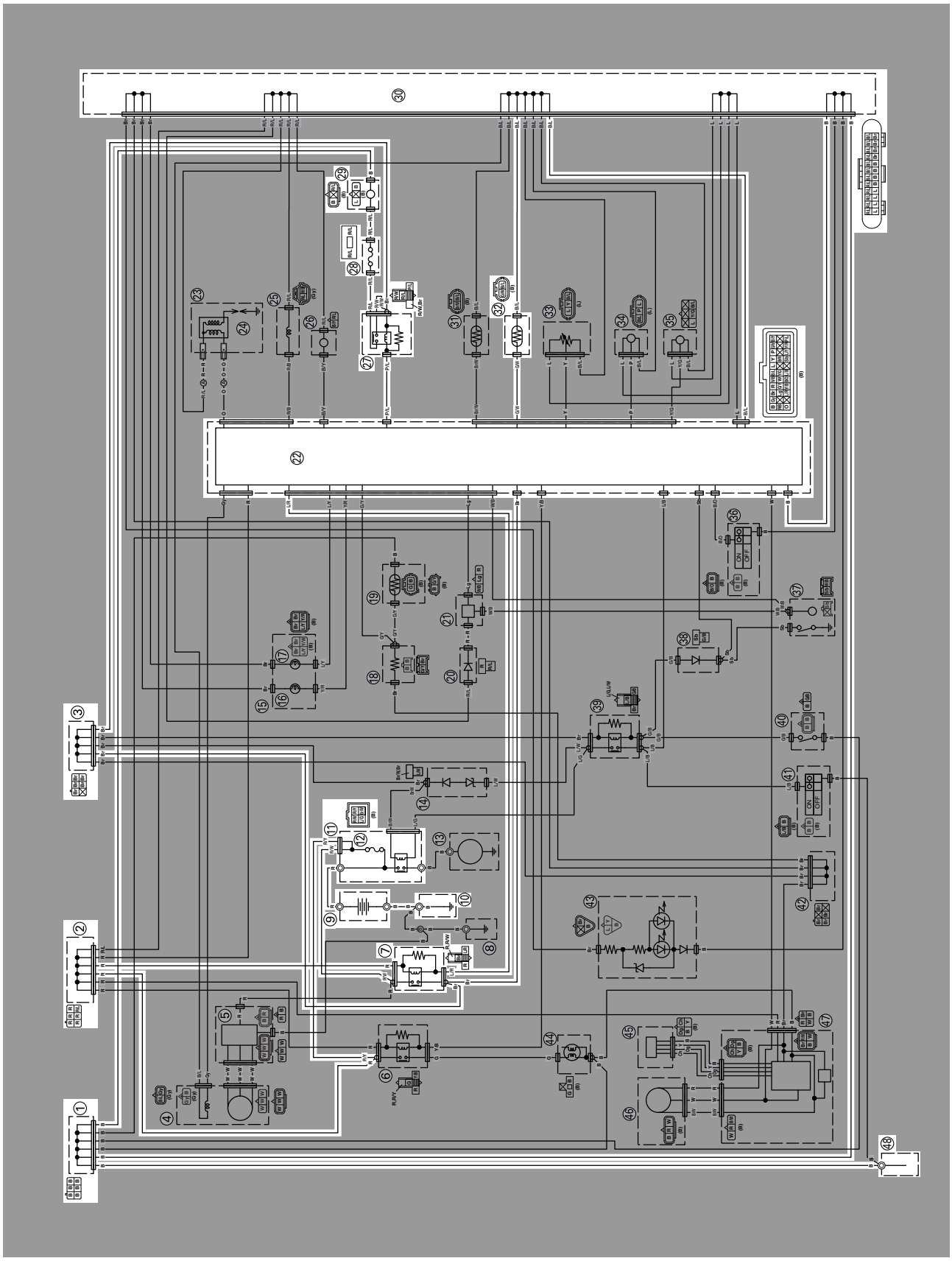

1. Joint connector
2. Joint connector
3. Joint connector
7. Main relay
9. Battery
10. Frame ground
11. Starter relay
12. Main fuse
22. ECU (engine control unit)
27. Radiator fan motor relay
28. Radiator fan motor fuse
29. Radiator fan motor
30. Joint connector
32. Coolant temperature sensor
48. Frame ground

TROUBLESHOOTING

The radiator fan motor fails to turn.

TIP

Before troubleshooting, remove the following part(s):
1. Seat
2. Side cover (left)
3. Air scoop (left/right)
4. Fuel tank

1. Check the fuse. Refer to "CHECKING THE FUSES" on page 9-68.	NG →	Replace the fuse(s).
OK ↓		
2. Check the battery. Refer to "CHECKING AND CHARGING THE BATTERY" on page 9-69.	NG →	• Clean the battery terminals. • Recharge or replace the battery.
OK ↓		
3. Check the main relay. Refer to "CHECKING THE RELAYS" on page 9-72.	NG →	Replace the main relay.
OK ↓		
4. Check the radiator fan motor. Refer to "CHECKING THE RADIATOR FAN MOTOR" on page 9-78.	NG →	Replace the radiator fan motor.
OK ↓		
5. Check the radiator fan motor relay. Refer to "CHECKING THE RELAYS" on page 9-72.	NG →	Replace the radiator fan motor relay.
OK ↓		
6. Check the coolant temperature sensor. Refer to "CHECKING THE COOLANT TEMPERATURE SENSOR" on page 9-78.	NG →	Replace the coolant temperature sensor.
OK ↓		
7. Check the entire cooling system's wiring. Refer to "CIRCUIT DIAGRAM" on page 9-16.	NG →	Properly connect or repair the cooling system's wiring.
OK ↓		
Replace the ECU.		

FUEL INJECTION SYSTEM

CIRCUIT DIAGRAM

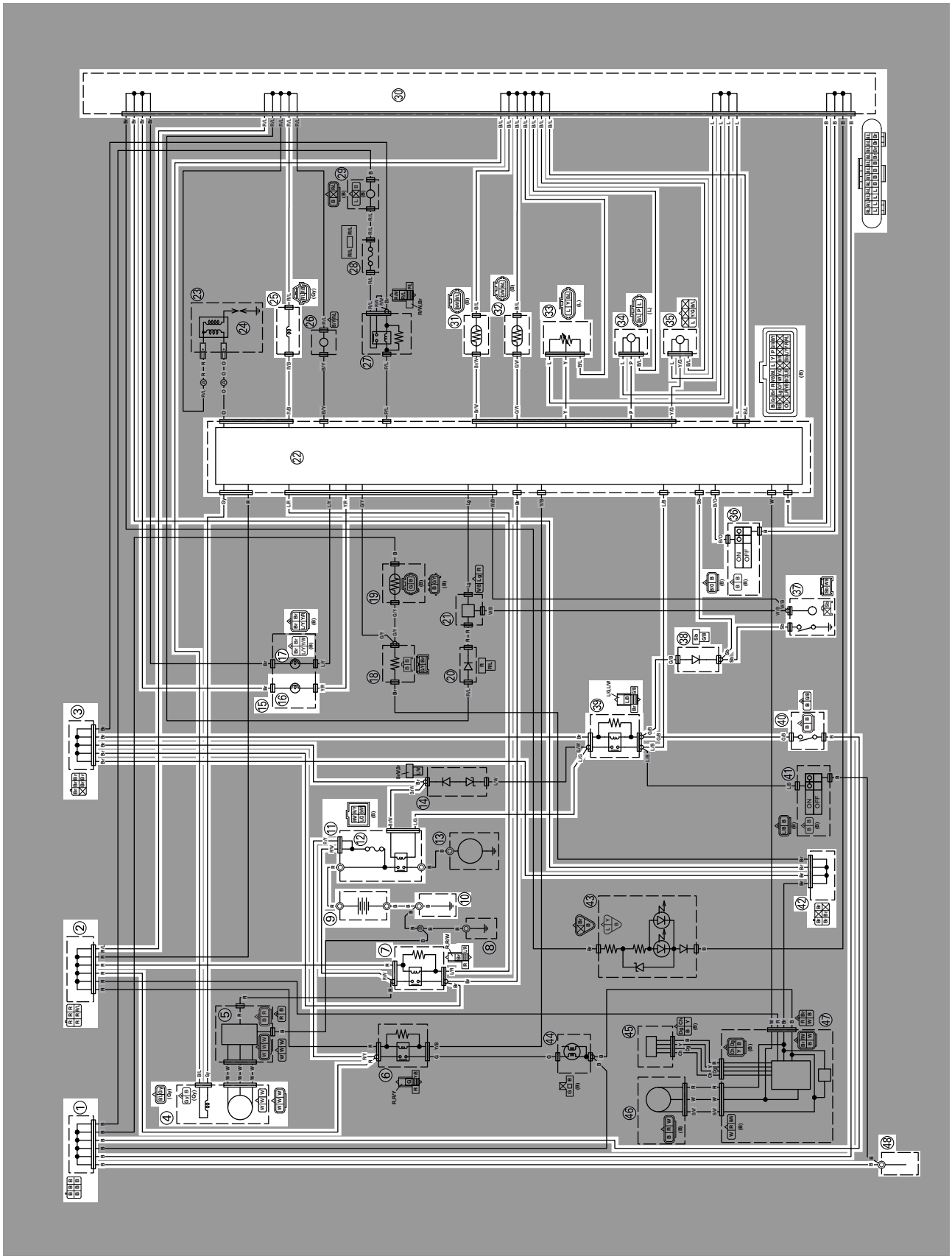

1. Joint connector
2. Joint connector
3. Joint connector
4. AC magneto
7. Main relay
9. Battery
10. Frame ground
11. Starter relay
12. Main fuse
15. Indicator light
16. Engine trouble warning light
22. ECU (engine control unit)
25. Injector
30. Joint connector
31. Intake air temperature sensor
32. Coolant temperature sensor
33. Throttle position sensor
34. Intake air pressure sensor
35. Lean angle sensor
36. Engine stop switch
37. Neutral switch
38. Diode
39. Starting circuit cut-off relay
40. Clutch switch
42. Joint connector
48. Frame ground

ECU SELF-DIAGNOSTIC FUNCTION

The ECU is equipped with a self-diagnostic function in order to ensure that the fuel injection system is operating normally. If this function detects a malfunction in the system, it immediately operates the engine under substitute characteristics and illuminates the engine trouble warning light to alert the rider that a malfunction has occurred in the system. Once a malfunction has been detected, a fault code number is stored in the memory of the ECU.

- To inform the rider that the fuel injection system is not functioning, the engine trouble warning light flashes while the start switch is being pushed to start the engine.
- If a malfunction is detected in the system by the self-diagnostic function, the ECU provides an appropriate substitute characteristic operation, and alerts the rider of the detected malfunction by illuminating the engine trouble warning light.

Engine trouble warning light indication and fuel injection system operation

Warning light indication	ECU operation	Fuel injection operation	Vehicle operation
Flashing*	Warning provided when unable to start engine	Operation stopped	Cannot be operated
Remains on	Malfunction detected	Operated with substitute characteristics in accordance with the description of the malfunction	Can or cannot be operated depending on the fault code

* The warning light flashes when any one of the following conditions is present and the start switch is pushed:

12: Crankshaft position sensor

30: Lean angle sensor (latch up detected)

33: Ignition coil (Malfunction detected in the primary wire of the ignition coil)

41: Lean angle sensor (open or short circuit)

50: ECU internal malfunction (faulty ECU memory)

Checking the engine trouble warning light

The engine trouble warning light comes on for around 2 seconds when pushing the start switch to turn on the meter light and the engine trouble warning light comes on while the start switch is being pushed.

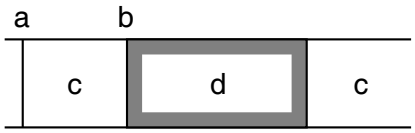

a. The meter light does not come on.
b. The meter light comes on.
c. Light OFF
d. Light ON for 2 seconds

ECU detects an abnormal signal from a sensor

If the ECU detects an abnormal signal from a sensor while the vehicle is being driven, the ECU illuminates the engine trouble warning light and provides the engine with alternate operating instructions that are appropriate for the type of malfunction.

When an abnormal signal is received from a sensor, the ECU processes the specified values that are programmed for each sensor in order to provide the engine with alternate operating instructions that enable the engine to continue operating or stop operating, depending on the conditions.

TROUBLESHOOTING METHOD

The engine operation is not normal and the engine trouble warning light comes on.

1. Check:
   - Fault code number

▼▼

a. Connect the Yamaha diagnostic tool. Refer to “YAMAHA DIAGNOSTIC TOOL” on page 9-32.
b. Check the fault code number displayed on the Yamaha diagnostic tool.
c. Identify the faulty system with the fault code number.
d. Identify the probable cause of the malfunction.

▲▲

2. Check and repair the probable cause of the malfunction.

Fault code No.	No fault code No.
Check and repair. Refer to “TROUBLESHOOTING DETAILS” on page 9-35. Monitor the operation of the sensors and actuators in the diagnostic mode. Refer to “TROUBLESHOOTING DETAILS” on page 9-35 and “LIST OF SELF-DIAGNOSTIC AND FAIL-SAFE ACTIONS” on page 10-5.	Check and repair.

3. Perform the reinstatement action for the fuel injection system. Refer to “Confirmation of service completion” in the appropriate table in “TROUBLESHOOTING DETAILS” on page 9-35.
4. After pushing the engine stop switch, push the start switch to check whether the fault code no. is displayed.

TIP

If another fault code number is displayed, repeat steps (1) to (4) until no fault code number is displayed.

5. Erase the malfunction history in the diagnostic mode. Refer to “SENSOR OPERATION TABLE” (Diagnostic code No.62).

TIP

Turning off the meter light will not erase the malfunction history.

The engine operation is not normal, but the engine trouble warning light does not come on.

1. Check the operation of the following sensors and actuators in the diagnostic mode. Refer to “TROUBLESHOOTING DETAILS” on page 9-35.

01: Throttle position sensor signal (throttle angle)
30: Ignition coil
36: Injector

If a malfunction is detected in the sensors or actuators, repair or replace all faulty parts.

If no malfunction is detected in the sensors and actuators, check and repair the inner parts of the engine.

YAMAHA DIAGNOSTIC TOOL

This model uses the Yamaha diagnostic tool to identify malfunctions.
For information about using the Yamaha diagnostic tool, refer to the operation manual that is included with the tool.

Yamaha diagnostic tool
90890-03231
Yamaha diagnostic tool (US)
90890-03234

FEATURES OF THE YAMAHA DIAGNOSTIC TOOL

A diagnosis can be made more quickly than traditional methods with the Yamaha diagnostic tool. Using this software, ECU and sensor data, as well as fault diagnosis, vehicle maintenance, and any necessary information can be recorded and displayed on your computer screen through a USB adapter connected to the computer interface with a communication cable connected to the vehicle's ECU.
Data obtained in various functions can be saved as vehicle history, and can be accumulated.

FUNCTIONS OF THE YAMAHA DIAGNOSTIC TOOL

Fault diagnosis mode	Fault codes recorded on the ECU are read, and the contents are displayed.
Function diagnostic mode	Check the operation of the output value of each sensor and actuator.
Inspection mode	Determine whether each sensor or actuator is functioning properly.
CO adjustment mode	Adjust the concentration of CO admissions during idling.
Monitoring mode	Displays a graph of sensor output values for actual operating conditions.
Logging mode	Records and saves the sensor output value in actual driving conditions.
View log	Displays the logging data.
ECU rewrite	If necessary, the ECU is rewritten using the ECU rewrite data provided by Yamaha. Ignition timing adjustment, etc. cannot be changed from the vehicle's original state.

However, the diagnostic tool cannot be used to freely change the basic vehicle functions, such as adjusting the ignition timing.

CONNECTING THE YAMAHA DIAGNOSTIC TOOL

1. Remove the coupler for connecting setting tool.

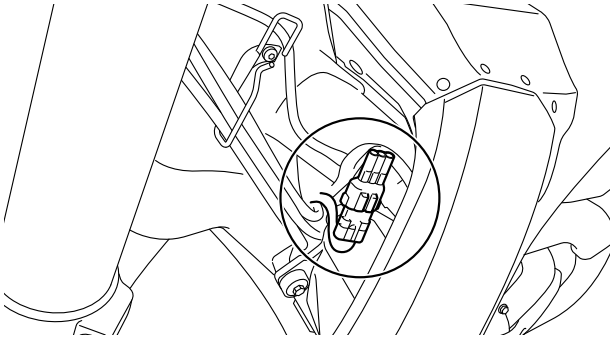

2. Connect the FI diagnostic tool sub-lead.

FI diagnostic tool sub–lead
90890-03212
FI diagnostic tool sub–lead
YU-03212

NOTICE

In order to avoid short circuit, insulate the battery connection terminals of the FI diagnostic tool sub-lead.

TIP

For information on how to connect and use the Yamaha diagnostic tool, refer to “YAMAHA DIGNOSTIC TOOL OPERATION MANUAL”.

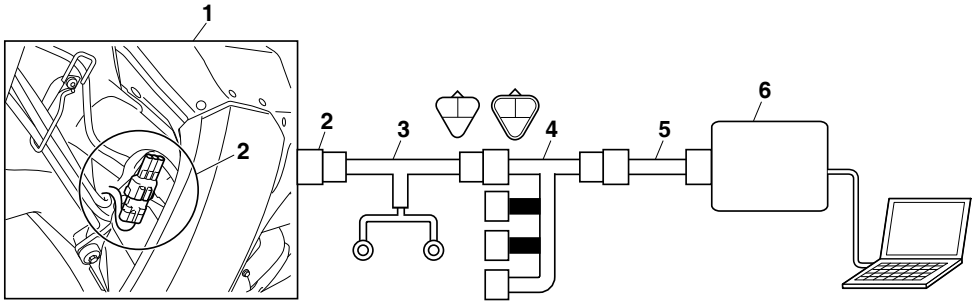

1. Vehicle
2. Coupler for connecting optional part
3. FI diagnostic tool sub-lead
4. Sub-harness (included with the Yamaha diagnostic tool)
5. Vehicle communication cable (included with the Yamaha diagnostic tool)
6. Yamaha diagnostic tool

Operation of the Yamaha diagnostic tool (Malfunction mode)

Malfunction results are displayed in the top part of the window area.

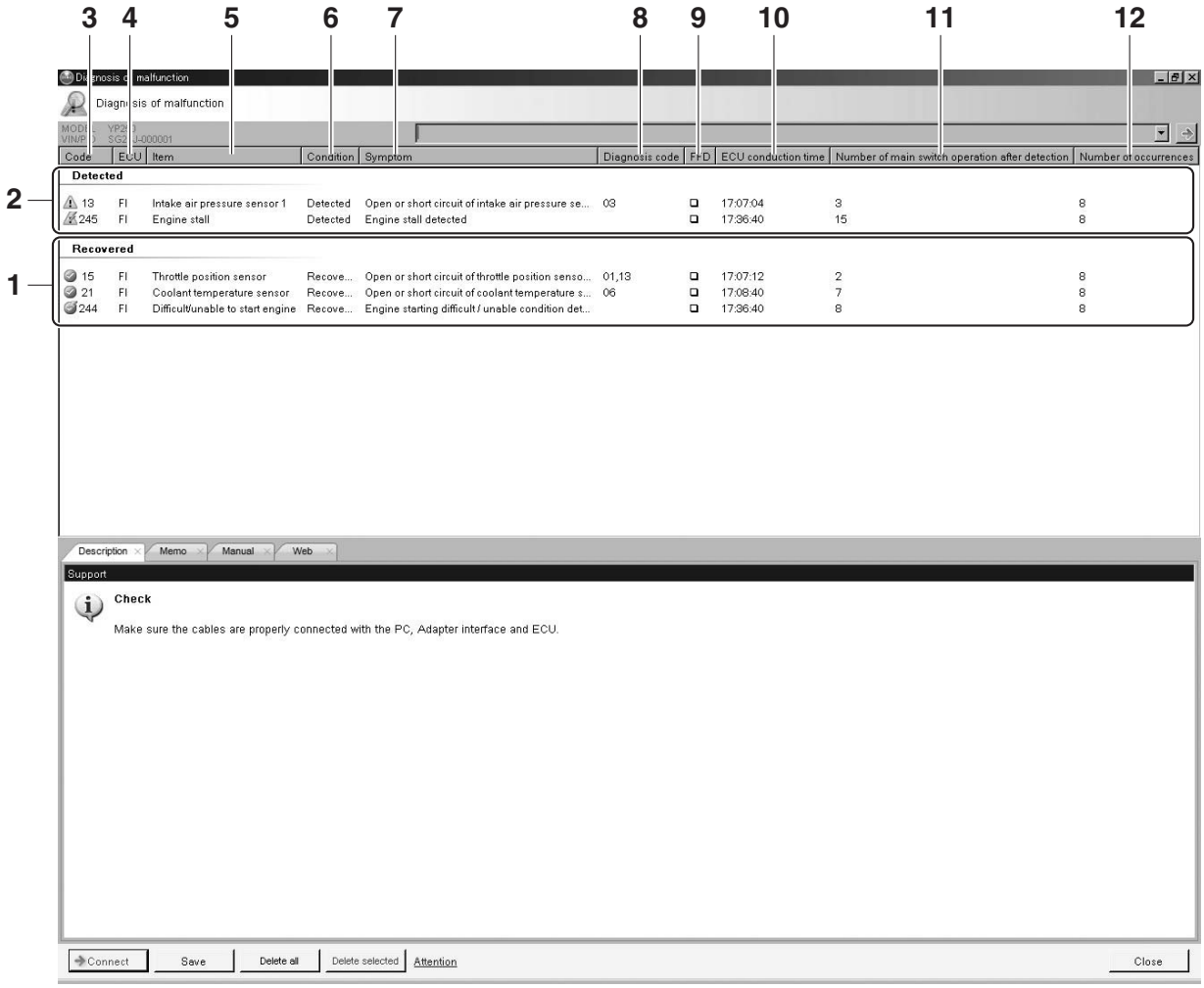

1. Recovered
   The item list of the malfunction detected in the past (already recovered) are displayed.
2. Detected
   The item list of the malfunction currently occurred are displayed.
3. Code
   The following icons and the fault code numbers for the detected malfunctions are displayed.

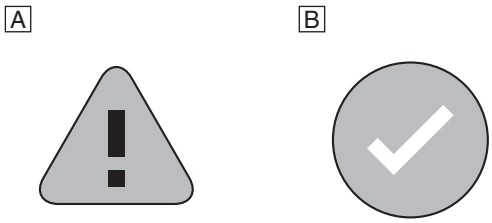

A. Detected malfunction
B. Recovered malfunction

4. ECU
   The types of the control units are displayed.
5. Item
   The item names of the detected malfunction are displayed.

6. Condition
   The current conditions are displayed. (Detected/Recovered)
7. Symptom
   The symptoms of the detected malfunction are displayed.
8. Diagnosis code
   The diagnosis codes related to the detected malfunction are displayed.
9. FFD (only for models that can display freeze frame data)
   The mark "❑" is displayed when the freeze frame data is available.
10. ECU conduction time (hour: minute: second)
    The total ECU conduction time (total hours the vehicle's main switch was ON) when the malfunction was detected is displayed.
11. Number of main switch operation after detection
    The number of times the meter light comes on by pushing the start switch between the malfunction detection and code reading is displayed.
12. Number of occurrences
    The number of malfunction occurrences between the malfunction detection and code reading is displayed.

TROUBLESHOOTING DETAILS

This section describes the measures per fault code number displayed on the diagnostic tool. Check and service the items or components that are the probable cause of the malfunction following the order given.
After the check and service of the malfunctioning part have been completed, reset the diagnostic tool display according to the reinstatement method.
Fault code No.:
Fault code number displayed on the diagnostic tool when the engine failed to work normally.
Diagnostic code No.:
Diagnostic code number to be used when the diagnostic mode is operated.

Fault code No.	**12**		
Item	**Crankshaft position sensor: no normal signals are received from the crankshaft position sensor.**		
Fail-safe system	Unable to start engine		
	Unable to drive vehicle		
Diagnostic code No.	—		
Diagnostic tool display	—		
Procedure	—		
Item	**Probable cause of malfunction and check**	**Maintenance job**	**Confirmation of service completion**
1	Connection of crankshaft position sensor coupler. Check the locking condition of the coupler. Disconnect the coupler and check the pins (bent or broken terminals and locking condition of the pins).	Improperly connected → Connect the coupler securely or repair/replace the wire harness.	Crank the engine. Fault code number is not displayed → Service is finished. Fault code number is displayed → Go to item 2.

Fault code No.		12	
Item		Crankshaft position sensor: no normal signals are received from the crankshaft position sensor.	
2	Connection of wire harness ECU coupler. Check the locking condition of the coupler. Disconnect the coupler and check the pins (bent or broken terminals and locking condition of the pins).	Improperly connected → Connect the coupler securely or repair/replace the wire harness.	Crank the engine. Fault code number is not displayed → Service is finished. Fault code number is displayed → Go to item 3.
3	Wire harness continuity.	Open or short circuit → Replace the wire harness. Between the crankshaft position sensor coupler and ECU coupler. black/blue–black/blue gray–gray	Crank the engine. Fault code number is not displayed → Service is finished. Fault code number is displayed → Go to item 4.
4	Installed condition of crankshaft position sensor. Check for looseness or pinching. Check the gap between the crankshaft position sensor and the pickup rotor.	Improperly installed sensor → Reinstall or replace the sensor. Refer to “GENERATOR AND STARTER CLUTCH” on page 6-62.	Crank the engine. Fault code number is not displayed → Service is finished. Fault code number is displayed → Go to item 5.
5	Defective crankshaft position sensor.	Check the crankshaft position sensor. Refer to “CHECKING THE CRANKSHAFT POSITION SENSOR” on page 9-74.	Crank the engine. Fault code number is not displayed → Service is finished. Fault code number is displayed → Go to item 6.
6	Malfunction in ECU.	Replace the ECU.	

TIP

- If fault code Nos. 13 and 14 are both displayed, perform the checks and maintenance jobs for fault code No. 13 first.
- Before troubleshooting, disconnect the starter motor lead from the starter relay.

Fault code No.	**13**
Item	**Intake air pressure sensor: open or short circuit detected.**
Fail-safe system	Able to start engine
	Able to drive vehicle
Diagnostic code No.	03
Diagnostic tool display	Displays the intake air pressure.
Procedure	Operate the throttle while pushing the start switch.(If the display value changes, the performance is OK.)

Item	Probable cause of malfunction and check	Maintenance job	Confirmation of service completion
1	Connection of intake air pressure sensor coupler. Check the locking condition of the coupler. Disconnect the coupler and check the pins (bent or broken terminals and locking condition of the pins).	Improperly connected → Connect the coupler securely or repair/replace the wire harness.	Push the start switch. Fault code number is not displayed → Service is finished. Fault code number is displayed → Go to item 2.
2	Connection of wire harness ECU coupler. Check the locking condition of the coupler. Disconnect the coupler and check the pins (bent or broken terminals and locking condition of the pins).	Improperly connected → Connect the coupler securely or repair/replace the wire harness.	Push the start switch. Fault code number is not displayed → Service is finished. Fault code number is displayed → Go to item 3.
3	Wire harness continuity.	Open or short circuit → Replace the wire harness. Between intake air pressure sensor coupler and ECU coupler. black/blue–black/blue pink–pink blue–blue	Push the start switch. Fault code number is not displayed → Service is finished. Fault code number is displayed → Go to item 4.
4	Installed condition of intake air pressure sensor. Check for looseness or pinching.	Improperly installed sensor → Reinstall or replace the sensor.	Push the start switch. Fault code number is not displayed → Service is finished. Fault code number is displayed → Go to item 5.

Fault code No.		13	
Item		**Intake air pressure sensor: open or short circuit detected.**	
5	Defective intake air pressure sensor.	Execute the diagnostic mode. (Code No. 03) When engine is stopped: Atmospheric pressure at the current altitude and weather conditions is indicated. At sea level: Approx. 101 kPa 1000 m above sea level: Approx. 90 kPa 2000 m above sea level: Approx. 80 kPa 3000 m above sea level: Approx. 70 kPa When engine is cranking: Make sure that the indication value changes. The value does not change when engine is cranking. → Check the intake air pressure sensor. Replace if defective. Refer to "CHECKING THE INTAKE AIR PRESSURE SENSOR" on page 9-80.	Push the start switch. Fault code number is not displayed → Service is finished. Fault code number is displayed → Go to item 6.
6	Malfunction in ECU.	Replace the ECU.	

TIP

- If fault code Nos. 13 and 14 are both displayed, perform the checks and maintenance jobs for fault code No. 13 first.
- Before troubleshooting, disconnect the starter motor lead from the starter relay.

Fault code No.		14	
Item		**Intake air pressure sensor: hose system malfunction (clogged or detached hose).**	
Fail-safe system		Able to start engine	
		Able to drive vehicle	
Diagnostic code No.		03	
Diagnostic tool display		Displays the intake air pressure.	
Procedure		Operate the throttle while pushing the start switch.(If the display value changes, the performance is OK.)	
Item	**Probable cause of malfunction and check**	**Maintenance job**	**Confirmation of service completion**
1	The intake air pressure sensor hose is damaged, disconnected, clogged, twisted or bent.	Repair or replace the sensor hose.	Start the engine and let it idle for approximately 5 seconds. Fault code number is not displayed → Service is finished. Fault code number is displayed → Go to item 2.

Fault code No.		14	
Item		Intake air pressure sensor: hose system malfunction (clogged or detached hose).	
2	Defective intake air pressure sensor.	Execute the diagnostic mode. (Code No. 03) When engine is stopped: Atmospheric pressure at the current altitude and weather conditions is indicated. At sea level: Approx. 101 kPa 1000 m above sea level: Approx. 90 kPa 2000 m above sea level: Approx. 80 kPa 3000 m above sea level: Approx. 70 kPa When engine is cranking: Make sure that the indication value changes. The value does not change when engine is cranking. → Check the intake air pressure sensor. Replace if defective. Refer to "CHECKING THE INTAKE AIR PRESSURE SENSOR" on page 9-80.	

TIP

Before troubleshooting, disconnect the starter motor lead from the starter relay.

Fault code No.		15	
Item		Throttle position sensor: open or short circuit detected.	
Fail-safe system		Able to start engine	
		Able to drive vehicle	
Diagnostic code No.		01	
Diagnostic tool display		Throttle position sensor signal • 11–14 (fully closed position) • 109–116 (fully open position)	
Procedure		• Check with throttle valve fully closed. • Check with throttle valve fully open.	
Item	**Probable cause of malfunction and check**	**Maintenance job**	**Confirmation of service completion**
1	Connection of throttle position sensor coupler. Check the locking condition of the coupler. Disconnect the coupler and check the pins (bent or broken terminals and locking condition of the pins).	Improperly connected → Connect the coupler securely or repair/replace the wire harness.	Push the start switch. Fault code number is not displayed → Service is finished. Fault code number is displayed → Go to item 2.

Fault code No.	15		
Item	**Throttle position sensor: open or short circuit detected.**		
2	Connection of wire harness ECU coupler. Check the locking condition of the coupler. Disconnect the coupler and check the pins (bent or broken terminals and locking condition of the pins).	Improperly connected → Connect the coupler securely or repair/replace the wire harness.	Push the start switch. Fault code number is not displayed → Service is finished. Fault code number is displayed → Go to item 3.
3	Wire harness continuity.	Open or short circuit → Replace the wire harness. Between throttle position sensor coupler and ECU coupler. black/blue–black/blue yellow–yellow blue–blue	Push the start switch. Fault code number is not displayed → Service is finished. Fault code number is displayed → Go to item 4.
4	Installed condition of throttle position sensor. Check for looseness or pinching.	Improperly installed sensor → Reinstall or replace the sensor. Refer to “ADJUSTING THE THROTTLE POSITION SENSOR” on page 8-11.	Push the start switch. Fault code number is not displayed → Service is finished. Fault code number is displayed → Go to item 5.
5	Applied voltage of throttle position sensor lead.	Check the applied voltage. (black/blue–blue) Refer to “CHECKING THE THROTTLE POSITION SENSOR” on page 9-79.	Push the start switch. Fault code number is not displayed → Service is finished. Fault code number is displayed → Go to item 6.
		Location of disconnected lead: Output voltage	
		Disconnected ground lead: 5V	
		Disconnected output lead: 0V	
		Disconnected power supply lead: 0V	
6	Defective throttle position sensor.	Check throttle position sensor signal. Execute the diagnostic mode. (Code No. 01) When the throttle valve is fully closed: A value of 11–14 is indicated. When throttle valve is fully open: A value of 109–116 is indicated. An indicated value is out of the specified range. → Replace the throttle position sensor.	Push the start switch. Fault code number is not displayed → Service is finished. Fault code number is displayed → Go to item 7.

Fault code No.		15	
Item		Throttle position sensor: open or short circuit detected.	
7	Malfunction in ECU.	Replace the ECU.	

TIP

Before troubleshooting, disconnect the starter motor lead from the starter relay.

Fault code No.	16
Item	Throttle position sensor: stuck throttle position sensor is detected.
Fail-safe system	Able to start engine
	Able to drive vehicle
Diagnostic code No.	01
Diagnostic tool display	Throttle position sensor signal • 11–14 (fully closed position) • 109–116 (fully open position)
Procedure	• Check with throttle valve fully closed. • Check with throttle valve fully open.

Item	Probable cause of malfunction and check	Maintenance job	Confirmation of service completion
1	Installed condition of throttle position sensor. Check for looseness or pinching.	Improperly installed sensor → Reinstall or replace the sensor. Refer to “ADJUSTING THE THROTTLE POSITION SENSOR” on page 8-11.	Push the start switch. Fault code number is not displayed → Service is finished. Fault code number is displayed → Go to item 2.
2	Defective throttle position sensor.	Check throttle position sensor signal. Execute the diagnostic mode. (Code No. 01) When the throttle valve is fully closed: A value of 11–14 is indicated. When throttle valve is fully open: A value of 109–116 is indicated. An indicated value is out of the specified range. → Replace the throttle position sensor.	Push the start switch. Fault code number is not displayed → Service is finished. Fault code number is displayed → Go to item 3.
3	Malfunction in ECU.	Replace the ECU.	

TIP

- Make sure that the engine is completely cool before checking the coolant temperature sensor.
- Before troubleshooting, disconnect the starter motor lead from the starter relay.

Fault code No.	**21**
Item	**Coolant temperature sensor: open or short circuit detected.**
Fail-safe system	Able to start engine
	Able to drive vehicle
Diagnostic code No.	06
Diagnostic tool display	Displays the coolant temperature.
Procedure	Compare the actually measured coolant temperature with the Yamaha diagnostic tool display value.

Item	Probable cause of malfunction and check	Maintenance job	Confirmation of service completion
1	Connection of coolant temperature sensor coupler. Check the locking condition of the coupler. Disconnect the coupler and check the pins (bent or broken terminals and locking condition of the pins).	Improperly connected → Connect the coupler securely or repair/replace the wire harness.	Push the start switch. Fault code number is not displayed → Service is finished. Fault code number is displayed → Go to item 2.
2	Connection of wire harness ECU coupler. Check the locking condition of the coupler. Disconnect the coupler and check the pins (bent or broken terminals and locking condition of the pins).	Improperly connected → Connect the coupler securely or repair/replace the wire harness.	Push the start switch. Fault code number is not displayed → Service is finished. Fault code number is displayed → Go to item 3.
3	Wire harness continuity.	Open or short circuit → Replace the wire harness. Between coolant temperature sensor coupler and ECU coupler. green/white–green/white black/blue–black/blue	Push the start switch. Fault code number is not displayed → Service is finished. Fault code number is displayed → Go to item 4.
4	Installed condition of coolant temperature sensor. Check for looseness or pinching.	Improperly installed sensor → Reinstall or replace the sensor.	Push the start switch. Fault code number is not displayed → Service is finished. Fault code number is displayed → Go to item 5.

Fault code No.		21	
Item		**Coolant temperature sensor: open or short circuit detected.**	
5	Defective coolant temperature sensor.	Execute the diagnostic mode. (Code No. 06) When engine is cold: Displayed temperature is close to the ambient temperature. The displayed temperature is not close to the ambient temperature. → Check the coolant temperature sensor. Replace if defective. Refer to "CHECKING THE COOLANT TEMPERATURE SENSOR" on page 9-78.	Push the start switch. Fault code number is not displayed → Service is finished. Fault code number is displayed → Go to item 6.
6	Malfunction in ECU.	Replace the ECU.	

TIP

- Make sure that the engine is completely cool before checking the intake air temperature sensor.
- Before troubleshooting, disconnect the starter motor lead from the starter relay.

Fault code No.		22	
Item		**Intake air temperature sensor: open or short circuit detected.**	
Fail-safe system		Able to start engine	
		Able to drive vehicle	
Diagnostic code No.		05	
Diagnostic tool display		Displays the intake air temperature.	
Procedure		Compare the actually measured intake air temperature with the Yamaha diagnostic tool display value.	
Item	**Probable cause of malfunction and check**	**Maintenance job**	**Confirmation of service completion**
1	Connection of intake air temperature sensor coupler. Check the locking condition of the coupler. Disconnect the coupler and check the pins (bent or broken terminals and locking condition of the pins).	Improperly connected → Connect the coupler securely or repair/replace the wire harness.	Push the start switch. Fault code number is not displayed → Service is finished. Fault code number is displayed → Go to item 2.
2	Connection of wire harness ECU coupler. Check the locking condition of the coupler. Disconnect the coupler and check the pins (bent or broken terminals and locking condition of the pins).	Improperly connected → Connect the coupler securely or repair/replace the wire harness.	Push the start switch. Fault code number is not displayed → Service is finished. Fault code number is displayed → Go to item 3.

Fault code No.	22		
Item	**Intake air temperature sensor: open or short circuit detected.**		
3	Wire harness continuity.	Open or short circuit → Replace the wire harness. Between intake air temperature sensor coupler and ECU coupler. black/blue–black/blue brown/white–brown/white	Push the start switch. Fault code number is not displayed → Service is finished. Fault code number is displayed → Go to item 4.
4	Installed condition of intake air temperature sensor. Check for looseness or pinching.	Improperly installed sensor → Reinstall or replace the sensor.	Push the start switch. Fault code number is not displayed → Service is finished. Fault code number is displayed → Go to item 5.
5	Defective intake air temperature sensor.	Execute the diagnostic mode. (Code No. 05) When engine is cold: Displayed temperature is close to the ambient temperature. The displayed temperature is not close to the ambient temperature. → Check the intake air temperature sensor. Replace if defective. Refer to "CHECKING THE INTAKE AIR TEMPERATURE SENSOR" on page 9-80.	Push the start switch. Fault code number is not displayed → Service is finished. Fault code number is displayed → Go to item 6.
6	Malfunction in ECU.	Replace the ECU.	

TIP

Before troubleshooting, disconnect the starter motor lead from the starter relay.

Fault code No.	30		
Item	**Latch up detected.**		
Fail-safe system	Unable to start engine		
	Unable to drive vehicle		
Diagnostic code No.	08		
Diagnostic tool display	Lean angle sensor output voltage • 0.4–1.4 (upright) • 3.7–4.4 (overturned)		
Procedure	Remove the lean angle sensor and incline it more than 45 degrees.		
Item	**Probable cause of malfunction and check**	**Maintenance job**	**Confirmation of service completion**
1	The vehicle has overturned.	Raise the vehicle upright.	Push the start switch. Fault code number is not displayed → Service is finished. Fault code number is displayed → Go to item 2.

Fault code No.		30	
Item		**Latch up detected.**	
2	Installed condition of lean angle sensor.	Check the installed direction and condition of the sensor.	Push the start switch. Fault code number is not displayed → Service is finished. Fault code number is displayed → Go to item 3.
3	Defective lean angle sensor.	Execute the diagnostic mode. (Code No. 08) Replace if defective. Refer to "CHECKING THE LEAN ANGLE SENSOR" on page 9-75.	Push the start switch. Fault code number is not displayed → Service is finished. Fault code number is displayed → Go to item 4.
4	Malfunction in ECU.	Replace the ECU.	

Fault code No.		33	
Item		**Ignition coil: open or short circuit detected in the primary lead of the ignition coil.**	
Fail-safe system		Unable to start engine	
		Unable to drive vehicle	
Diagnostic code No.		30	
Actuation		Actuates the ignition coil five times at one-second intervals. The engine trouble warning light and the "WARNING" on the Yamaha diagnostic tool screen come on each time the ignition coil is actuated.	
Procedure		Check that a spark is generated five times. • Connect an ignition checker.	
Item	**Probable cause of malfunction and check**	**Maintenance job**	**Confirmation of service completion**
1	Connection of ignition coil coupler. Check the locking condition of the coupler. Disconnect the coupler and check the pins (bent or broken terminals and locking condition of the pins).	Improperly connected → Connect the coupler securely or repair/replace the wire harness.	Start the engine and let it idle for approximately 5 seconds. Fault code number is not displayed → Service is finished. Fault code number is displayed → Go to item 2.
2	Connection of wire harness ECU coupler. Check the locking condition of the coupler. Disconnect the coupler and check the pins (bent or broken terminals and locking condition of the pins).	Improperly connected → Connect the coupler securely or repair/replace the wire harness.	Start the engine and let it idle for approximately 5 seconds. Fault code number is not displayed → Service is finished. Fault code number is displayed → Go to item 3.

Fault code No.		33	
Item		Ignition coil: open or short circuit detected in the primary lead of the ignition coil.	
3	Connection of sub wire harness coupler.Check the locking condition of the coupler.Disconnect the coupler and check the pins (bent or broken terminals and locking condition of the pins).	Improperly connected → Connect the coupler secure-lyor repair/replace the sub wire harness.	Start the engine and let it idle for approximately 5 seconds. Fault code number is not displayed → Service is finished. Fault code number is displayed → Go to item 4.
4	Wire harness continuity.	Open or short circuit → Replace the wire harness. Between ignition coil coupler and ECU coupler. orange–orange	Start the engine and let it idle for approximately 5 seconds. Fault code number is not displayed → Service is finished. Fault code number is displayed → Go to item 5.
5	Installed condition of ignition coil. Check for looseness or pinching.	Improperly installed sensor → Reinstall or replace the sensor.	Start the engine and let it idle for approximately 5 seconds. Fault code number is not displayed → Service is finished. Fault code number is displayed → Go to item 6.
6	Defective ignition coil. (test the primary coils for continuity)	Check the ignition coil. Replace if defective. Refer to “CHECKING THE IGNITION COIL” on page 9-74.	Start the engine and let it idle for approximately 5 seconds. Fault code number is not displayed → Service is finished. Fault code number is displayed → Go to item 7.
7	Malfunction in ECU.	Execute the diagnostic mode (diagnostic code No. 30). No spark → Replace the ECU.	

TIP

Disconnect the fuel pump coupler when this diagnostic tool is used.

Fault code No.	**39**
Item	**Injector: open or short circuit detected.**
Fail-safe system	Unable to start engine
	Unable to drive vehicle
Diagnostic code No.	36
Actuation	Actuates injector five times at one-second intervals. The engine trouble warning light and the “WARNING” on the Yamaha diagnostic tool screen come on each time the injector is actuated.
Procedure	Check that injector is actuated five times by listening for the operating sound.

Item	Probable cause of malfunction and check	Maintenance job	Confirmation of service completion
1	Connection of injector coupler. Check the locking condition of the coupler. Disconnect the coupler and check the pins (bent or broken terminals and locking condition of the pins).	Improperly connected → Connect the coupler securely or repair/replace the wire harness.	Execute the diagnostic mode (Code No. 36). No operating sound → Go to item 2. Operating sound → Go to item 6.
2	Defective injector.	Measure the fuel injector resistance. Replace if out of specification. Refer to “CHECKING THE FUEL INJECTOR” on page 9-81.	Execute the diagnostic mode (Code No. 36). No operating sound → Go to item 3. Operating sound → Go to item 6.
3	Connection of wire harness ECU coupler. Check the locking condition of the coupler. Disconnect the coupler and check the pins (bent or broken terminals and locking condition of the pins).	Improperly connected → Connect the coupler securely or repair/replace the wire harness.	Execute the diagnostic mode (Code No. 36). No operating sound → Go to item 4. Operating sound → Go to item 6.
4	Wire harness continuity.	Open or short circuit → Replace the wire harness. Between injector coupler and ECU coupler. red/black–red/black red–red/blue	Execute the diagnostic mode (Code No. 36). No operating sound → Go to item 5. Operating sound → Go to item 6.
5	Malfunction in ECU.	Replace the ECU.	—
6	Delete the fault code.	—	Start the engine and let it idle for approximately 5 seconds. Check that the fault code number is not displayed.

TIP

Before troubleshooting, disconnect the starter motor lead from the starter relay.

Fault code No.	**41**
Item	**Lean angle sensor: open or short circuit detected.**
Fail-safe system	Unable to start engine
	Able to drive vehicle
Diagnostic code No.	08
Diagnostic tool display	Lean angle sensor output voltage • 0.4–1.4 (upright) • 3.7–4.4 (overturned)
Procedure	Remove the lean angle sensor and incline it more than 45 degrees.

Item	Probable cause of malfunction and check	Maintenance job	Confirmation of service completion
1	Connection of lean angle sensor coupler. Check the locking condition of the coupler. Disconnect the coupler and check the pins (bent or broken terminals and locking condition of the pins).	Improperly connected → Connect the coupler securely or repair/replace the wire harness.	Push the start switch. Fault code number is not displayed → Service is finished. Fault code number is displayed → Go to item 2.
2	Connection of wire harness ECU coupler. Check the locking condition of the coupler. Disconnect the coupler and check the pins (bent or broken terminals and locking condition of the pins).	Improperly connected → Connect the coupler securely or repair/replace the wire harness.	Push the start switch. Fault code number is not displayed → Service is finished. Fault code number is displayed → Go to item 3.
3	Wire harness continuity.	Open or short circuit → Replace the wire harness. Between lean angle sensor coupler and ECU coupler. blue–blue yellow/green–yellow/green black/blue–black/blue	Push the start switch. Fault code number is not displayed → Service is finished. Fault code number is displayed → Go to item 4.
4	Defective lean angle sensor.	Execute the diagnostic mode. (Code No. 08) Replace if defective. Refer to “CHECKING THE LEAN ANGLE SENSOR” on page 9-75.	Push the start switch. Fault code number is not displayed → Service is finished. Fault code number is displayed → Go to item 5.
5	Malfunction in ECU.	Replace the ECU.	

Fault code No.	**43**
Item	**Fuel system voltage: incorrect voltage supplied to the fuel injector and fuel pump.**
Fail-safe system	Able to start engine
	Able to drive vehicle
Diagnostic code No.	09
Diagnostic tool display	Fuel system voltage Approximately 12.0 (V)
Procedure	Disconnect the main relay, and push the start switch or push down the kickstarter lever.

Item	Probable cause of malfunction and check	Maintenance job	Confirmation of service completion
1	Connection of main relay coupler. Check the locking condition of the coupler. Disconnect the coupler and check the pins (bent or broken terminals and locking condition of the pins).	Improperly connected → Connect the coupler securely or repair/replace the wire harness.	Start the engine and let it idle for approximately 5 seconds. Fault code number is not displayed → Service is finished. Fault code number is displayed → Go to item 2.
2	Connection of wire harness ECU coupler. Check the locking condition of the coupler. Disconnect the coupler and check the pins (bent or broken terminals and locking condition of the pins).	Improperly connected → Connect the coupler securely or repair/replace the wire harness.	Start the engine and let it idle for approximately 5 seconds. Fault code number is not displayed → Service is finished. Fault code number is displayed → Go to item 3.
3	Wire harness continuity.	Open or short circuit → Replace the wire harness. Between battery terminal and ECU coupler. red-red red-red/white Between main relay coupler and ECU coupler. brown-brown blue/red-blue/red	Start the engine and let it idle for approximately 5 seconds. Fault code number is not displayed → Service is finished. Fault code number is displayed → Go to item 4.
4	Defective main relay.	No operating sound → Replace the main relay.	Start the engine and let it idle for approximately 5 seconds. Fault code number is not displayed → Service is finished. Fault code number is displayed → Go to item 5.
5	Defective main relay.	Execute the diagnostic mode. (Code No. 09) Fuel system voltage is below 3 V → Replace the main relay.	Start the engine and let it idle for approximately 5 seconds. Fault code number is not displayed → Service is finished. Fault code number is displayed → Go to item 6.
6	Malfunction in ECU.	Replace the ECU.	

TIP

Before troubleshooting, disconnect the starter motor lead from the starter relay.

Fault code No.	**44**
Item	**EEPROM fault code number: an error is detected while reading or writing on EEPROM.**
Fail-safe system	Able/Unable to start engine
	Able/Unable to drive vehicle
Diagnostic code No.	60
Diagnostic tool display	EEPROM fault code display • 00: No fault • 01: CO adjustment value • 07: Setting tool adjustment values 0–8 for fuel injection amount or ignition timing
Procedure	—

Item	Probable cause of malfunction and check	Maintenance job	Confirmation of service completion
1	Locate the malfunction	Execute the diagnostic mode (Code No. 60). 00: Go to item 4. 01: Go to item 2. 07: Go to item 3.	—
2	“01” is indicated in Diagnostic mode (Code No. 60) EEPROM data error for adjustment of CO concentration	Change the CO concentration, and rewrite in EEPROM. After this adjustment, push the engine stop switch, then push the start switch. Memory not recovered → Replace the ECU.	Push the start switch. Fault code number is not displayed → Service is finished. Fault code number is displayed → Repeat the procedure in item 1. If the same number is indicated, perform the procedure in item 4.
3	“07” is indicated in Diagnostic mode (Code No. 60) EEPROM data error for setting tool adjustment values for fuel injection amount or ignition timing.	Erase the setting map in the diagnostic mode (diagnostic code No. 65).	Push the start switch. Fault code number is not displayed → Service is finished. Fault code number is displayed → Repeat the procedure in item 1. If the same number is indicated, perform the procedure in item 4.
4	Malfunction in ECU.	Replace the ECU.	

Fault code No.	**46**
Item	**Charging voltage is abnormal.**
Fail-safe system	Able/Unable to start engine
	Able/Unable to drive vehicle
Diagnostic code No.	—
Diagnostic tool display	—
Procedure	—

Item	Probable cause of malfunction and check	Maintenance job	Confirmation of service completion
1	Connection of wire harness ECU coupler. Check the locking condition of the coupler. Disconnect the coupler and check the pins (bent or broken terminals and locking condition of the pins).	Improperly connected → Connect the coupler securely or repair/replace the wire harness.	Start the engine and let it idle for approximately 5 seconds. Fault code number is not displayed → Service is finished. Fault code number is displayed → Go to item 2.
2	Wire harness continuity.	Open or short circuit →Replace the wire harness. Between rectifier/regulator coupler and ECU coupler. red–red Between battery terminal and ECU coupler. red–red	Start the engine and let it idle for approximately 5 seconds. Fault code number is not displayed → Service is finished. Fault code number is displayed → Go to item 3.
3	Defective AC magneto.	Check the AC magneto. Refer to “CHARGING SYSTEM” on page 9-12. Defective AC magneto → Replace.	Start the engine and let it idle for approximately 5 seconds. Fault code number is not displayed → Service is finished. Fault code number is displayed → Go to item 4.
4	Malfunction in ECU.	Replace the ECU.	

TIP

Before troubleshooting, disconnect the starter motor lead from the starter relay.

Fault code No.	**50**		
Item	**Faulty ECU memory. (When this malfunction is detected in the ECU, the fault code number might not appear on the meter.)**		
Fail-safe system	Unable to start engine		
	Unable to drive vehicle		
Diagnostic code No.	—		
Diagnostic tool display	—		
Procedure	—		
Item	**Probable cause of malfunction and check**	**Maintenance job**	**Confirmation of service completion**
1	Malfunction in ECU.	Replace the ECU.	Push the start switch. Check that the fault code number is not displayed.

TIP

Before troubleshooting, disconnect the starter motor lead from the starter relay.

Fault code No.	**waiting for connection**		
Item	**No communication signal is received from the ECU.**		
Fail-safe system	Able to start engine (Unable when ECU is malfunctioning)		
	Able to drive vehicle (Unable when ECU is malfunctioning)		
Diagnostic code No.	—		
Diagnostic tool display	—		
Procedure	—		
Item	**Probable cause of malfunction and check**	**Maintenance job**	**Confirmation of service completion**
1	Connection of Yamaha diagnostic tool coupler. Check the locking condition of the coupler. Disconnect the coupler and check the pins (bent or broken terminals and locking condition of the pins).	Improperly connected → Connect the coupler securely or repair/replace the wire harness.	Push the start switch. Fault code number is not displayed → Service is finished. Fault code number is displayed → Go to item 2.
2	Connection of wire harness ECU coupler. Check the locking condition of the coupler. Disconnect the coupler and check the pins (bent or broken terminals and locking condition of the pins).	Improperly connected → Connect the coupler securely or repair/replace the wire harness.	Push the start switch. Fault code number is not displayed → Service is finished. Fault code number is displayed → Go to item 3.

Fault code No.		waiting for connection	
Item		**No communication signal is received from the ECU.**	
3	Wire harness continuity.	Open or short circuit → Replace the wire harness. light green–light green	Push the start switch. Fault code number is not displayed → Service is finished. Fault code number is displayed → Go to item 4.
4	Yamaha diagnostic tool malfunction.	Replace the Yamaha diagnostic tool.	Push the start switch. Fault code number is not displayed → Service is finished. Fault code number is displayed → Go to item 5.
5	Malfunction in ECU.	Replace the ECU.	

TIP

Before troubleshooting, disconnect the starter motor lead from the starter motor.

Fault code No.		Er-2	
Item		**Signals from the ECU cannot be received within the specified period of time.**	
Fail-safe system		Able to start engine	
		Able to drive vehicle	
Diagnostic code No.		—	
Diagnostic tool display		—	
Procedure		—	
Item	**Probable cause of malfunction and check**	**Maintenance job**	**Confirmation of service completion**
1	Connection of Yamaha diagnostic tool coupler. Check the locking condition of the coupler. Disconnect the coupler and check the pins (bent or broken terminals and locking condition of the pins).	Improperly connected → Connect the coupler securely or repair/replace the wire harness.	Push the start switch. Fault code number is not displayed → Service is finished. Fault code number is displayed → Go to item 2.
2	Connection of wire harness ECU coupler. Check the locking condition of the coupler. Disconnect the coupler and check the pins (bent or broken terminals and locking condition of the pins).	Improperly connected → Connect the coupler securely or repair/replace the wire harness.	Push the start switch. Fault code number is not displayed → Service is finished. Fault code number is displayed → Go to item 3.
3	Wire harness continuity.	Open or short circuit → Replace the wire harness. light green–light green	Push the start switch. Fault code number is not displayed → Service is finished. Fault code number is displayed → Go to item 4.

Fault code No.		Er-2	
Item		Signals from the ECU cannot be received within the specified period of time.	
4	Yamaha diagnostic tool malfunction.	Replace the Yamaha diagnostic tool.	Push the start switch. Fault code number is not displayed → Service is finished. Fault code number is displayed → Go to item 5.
5	Malfunction in ECU.	Replace the ECU.	

TIP

Before troubleshooting, disconnect the starter motor lead from the starter motor.

Fault code No.		Er-3	
Item		Data from the ECU cannot be received correctly.	
Fail-safe system		Able to start engine	
		Able to drive vehicle	
Diagnostic code No.		—	
Diagnostic tool display		—	
Procedure		—	
Item	**Probable cause of malfunction and check**	**Maintenance job**	**Confirmation of service completion**
1	Connection of Yamaha diagnostic tool coupler. Check the locking condition of the coupler. Disconnect the coupler and check the pins (bent or broken terminals and locking condition of the pins).	Improperly connected → Connect the coupler securely or repair/replace the wire harness.	Push the start switch. Fault code number is not displayed → Service is finished. Fault code number is displayed → Go to item 2.
2	Connection of wire harness ECU coupler. Check the locking condition of the coupler. Disconnect the coupler and check the pins (bent or broken terminals and locking condition of the pins).	Improperly connected → Connect the coupler securely or repair/replace the wire harness.	Push the start switch. Fault code number is not displayed → Service is finished. Fault code number is displayed → Go to item 3.
3	Wire harness continuity.	Open or short circuit → Replace the wire harness. light green–light green	Push the start switch. Fault code number is not displayed → Service is finished. Fault code number is displayed → Go to item 4.
4	Yamaha diagnostic tool malfunction.	Replace the Yamaha diagnostic tool.	Push the start switch. Fault code number is not displayed → Service is finished. Fault code number is displayed → Go to item 5.
5	Malfunction in ECU.	Replace the ECU.	

TIP

Before troubleshooting, disconnect the starter motor lead from the starter relay.

Fault code No.	**Er-4**
Item	**Registered data cannot be received from the Yamaha diagnostic tool.**
Fail-safe system	Able to start engine
	Able to drive vehicle
Diagnostic code No.	—
Diagnostic tool display	—
Procedure	—

Item	Probable cause of malfunction and check	Maintenance job	Confirmation of service completion
1	Connection of Yamaha diagnostic tool coupler. Check the locking condition of the coupler. Disconnect the coupler and check the pins (bent or broken terminals and locking condition of the pins).	Improperly connected → Connect the coupler securely or repair/replace the wire harness.	Push the start switch. Fault code number is not displayed → Service is finished. Fault code number is displayed → Go to item 2.
2	Connection of wire harness ECU coupler. Check the locking condition of the coupler. Disconnect the coupler and check the pins (bent or broken terminals and locking condition of the pins).	Improperly connected → Connect the coupler securely or repair/replace the wire harness.	Push the start switch. Fault code number is not displayed → Service is finished. Fault code number is displayed → Go to item 3.
3	Wire harness continuity.	Open or short circuit → Replace the wire harness. light green–light green	Push the start switch. Fault code number is not displayed → Service is finished. Fault code number is displayed → Go to item 4.
4	Yamaha diagnostic tool malfunction.	Replace the Yamaha diagnostic tool.	Push the start switch. Fault code number is not displayed → Service is finished. Fault code number is displayed → Go to item 5.
5	Malfunction in ECU.	Replace the ECU.	

FUEL PUMP SYSTEM

CIRCUIT DIAGRAM

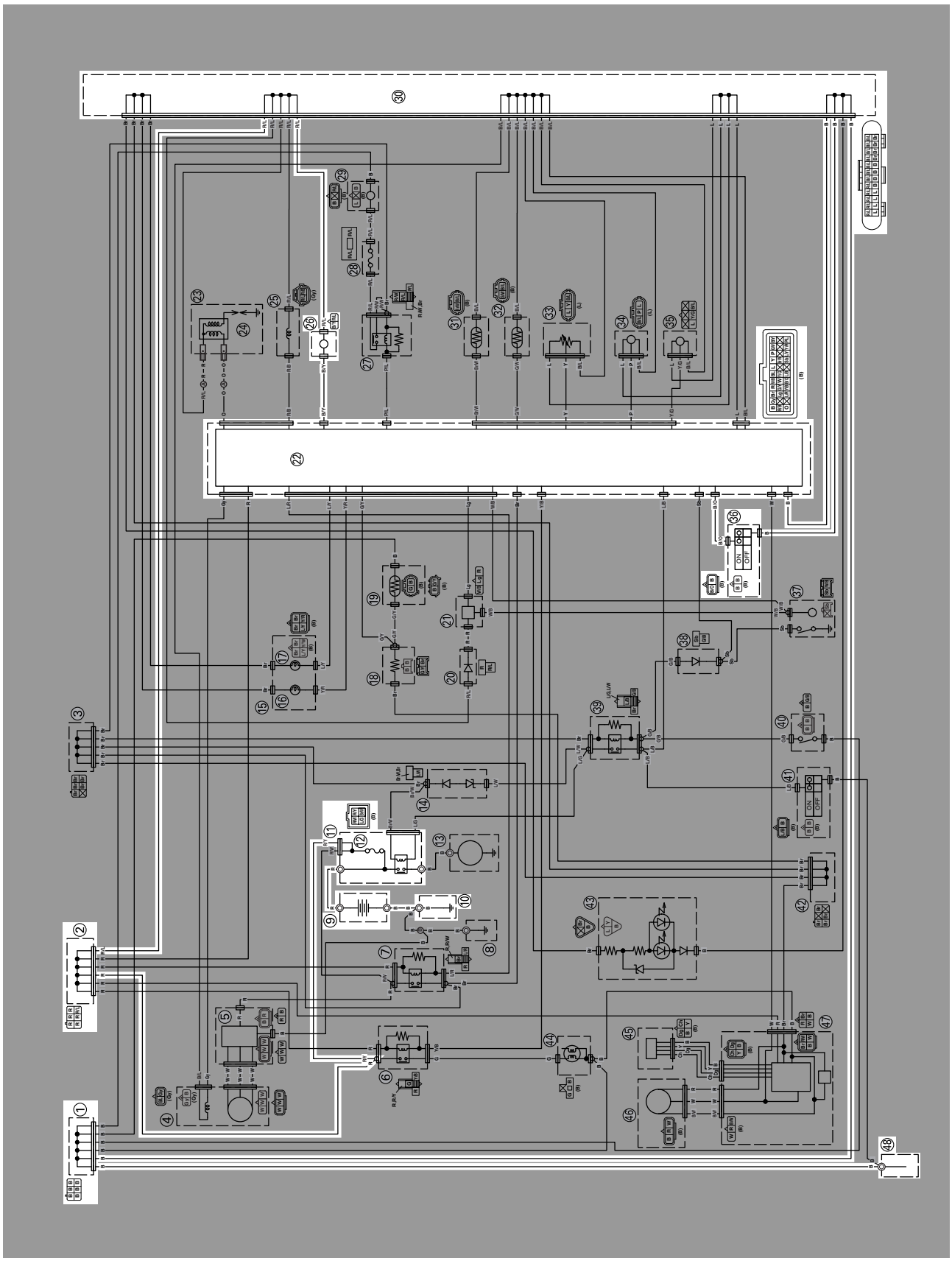

1. Joint connector
2. Joint connector
9. Battery
10. Frame ground
11. Starter relay
12. Main fuse
22. ECU (engine control unit)
26. Fuel pump
30. Joint connector
36. Engine stop switch
48. Frame ground

TROUBLESHOOTING

The fuel pump fails to operate.

TIP

Before troubleshooting, remove the following part(s):
1. Seat
2. Side cover (left/right)
3. Air scoop (left/right)
4. Fuel tank

1. Check the fuse. Refer to "CHECKING THE FUSES" on page 9-68.	NG →	Replace the fuse(s).
OK ↓		
2. Check the battery. Refer to "CHECKING AND CHARGING THE BATTERY" on page 9-69.	NG →	• Clean the battery terminals. • Recharge or replace the battery.
OK ↓		
3. Check the engine stop switch. Refer to "CHECKING THE SWITCHES" on page 9-64.	NG →	Replace the engine stop switch.
OK ↓		
4. Check fuel pressure. Refer to "CHECKING THE FUEL PRESSURE" on page 8-5.	NG →	Replace the fuel pump.
OK ↓		
5. Check the fuel pump system wire harness connections. Refer to "CIRCUIT DIAGRAM" on page 9-56.	NG →	Properly connect or repair the fuel pump system's wiring.
OK ↓		
Replace the ECU.		

ELECTRICAL COMPONENTS

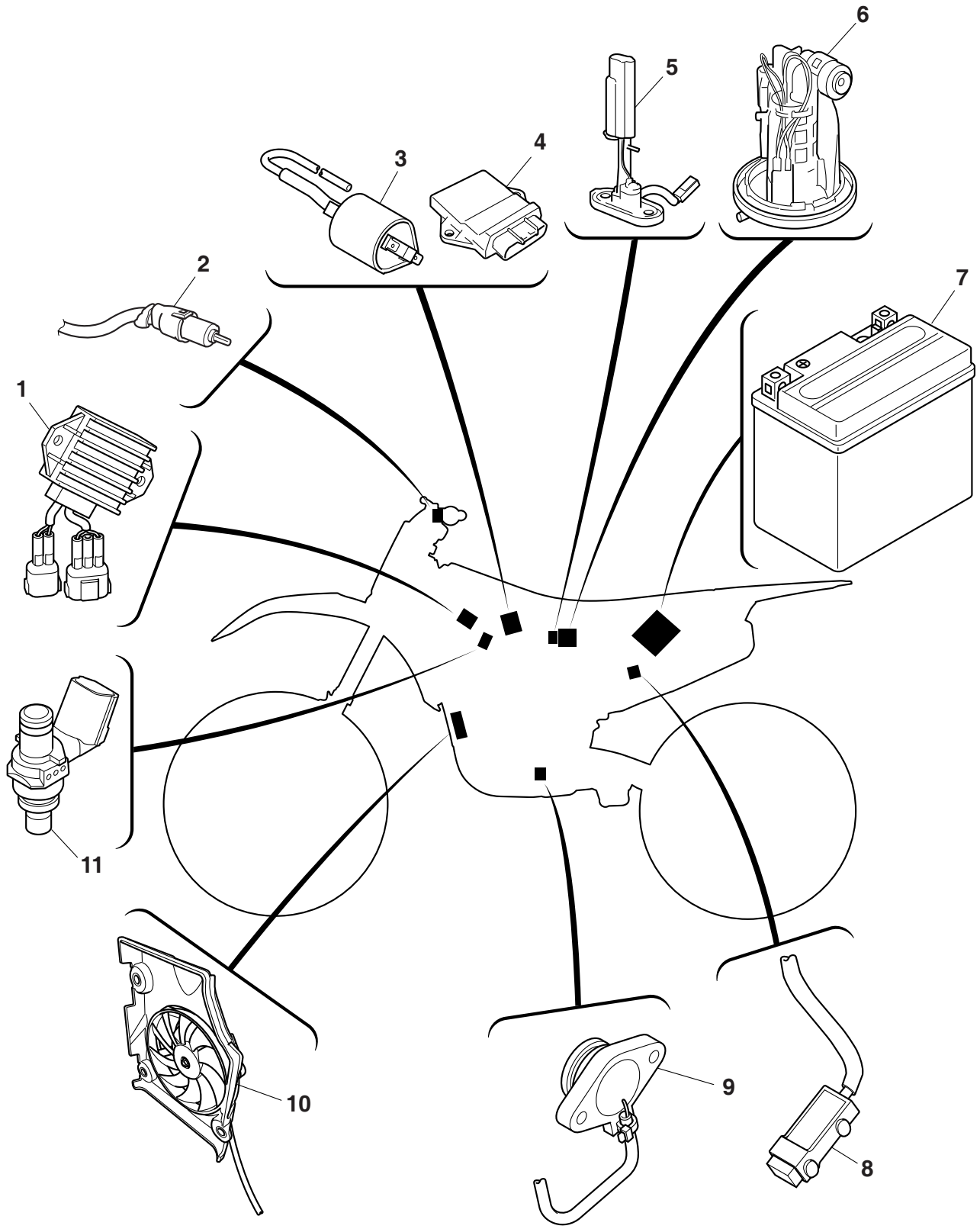

1. Rectifier/regulator
2. Clutch switch
3. Ignition coil
4. ECU (engine control unit)
5. Fuel sender
6. Fuel pump
7. Battery
8. Resistor
9. Neutral switch
10. Radiator fan motor
11. Injector

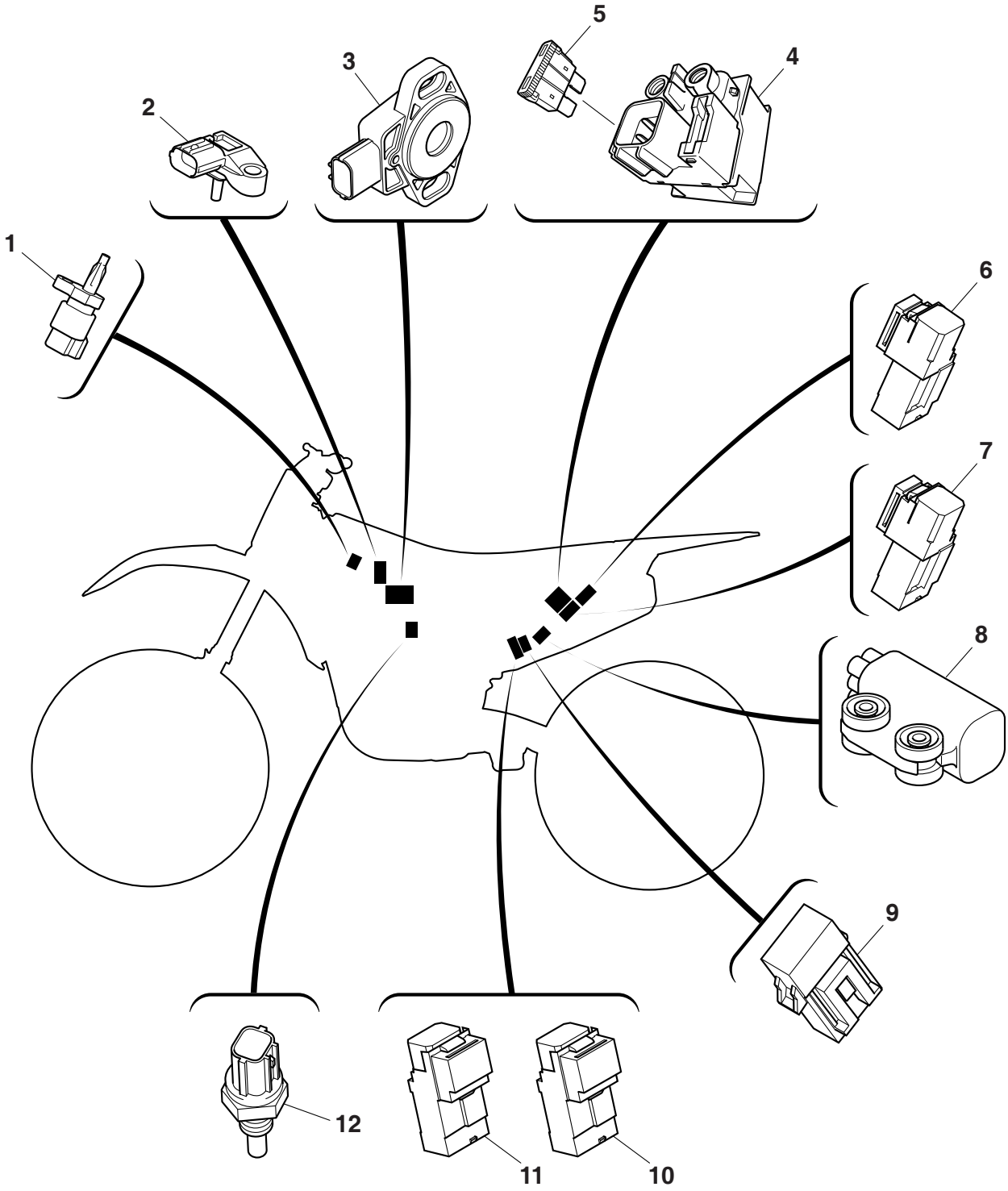
1
2
3
4
5
6
7
8
9
10
11
12

1. Intake air temperature sensor
2. Intake air pressure sensor
3. Throttle position sensor
4. Starter relay
5. Main fuse
6. Headlight relay
7. Starting circuit cut-off relay
8. Lean angle sensor
9. Radiator fan motor fuse
10. Radiator fan motor relay
11. Main relay
12. Coolant temperature sensor

CHECKING THE SWITCHES

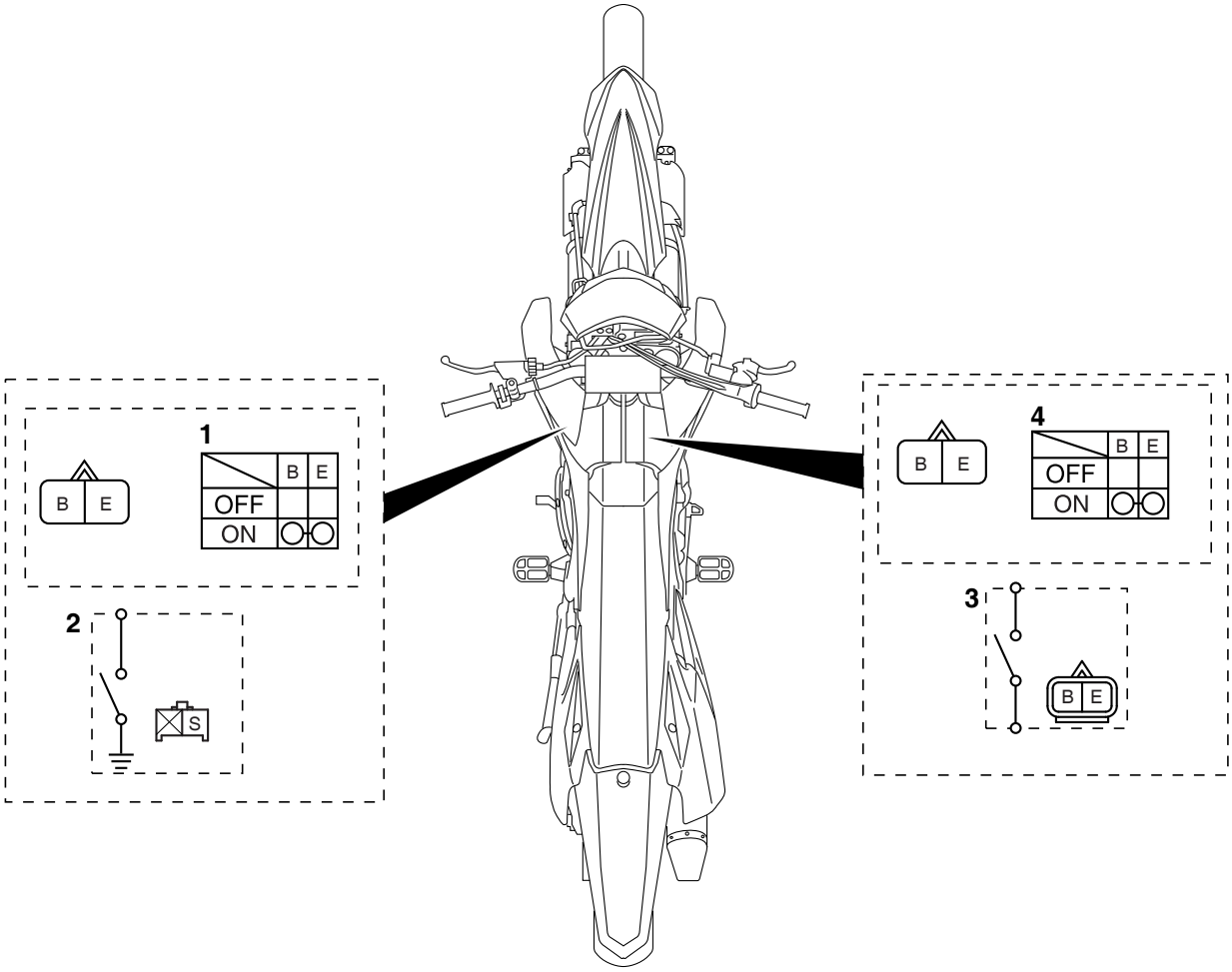

1. Engine stop switch
2. Neutral switch
3. Clutch switch
4. Start switch

Check each switch for continuity with the pocket tester. If the continuity reading is incorrect, check the wiring connections and if necessary, replace the switch.

NOTICE

Never insert the tester probes into the coupler terminal slots "1". Always insert the probes from the opposite end of the coupler, taking care not to loosen or damage the leads.

Pocket tester
90890-03112
Analog pocket tester
YU-03112-C

TIP

- Before checking for continuity, set the pocket tester range to "Ω × 1" to make a "0" adjustment.
- When checking for continuity, switch back and forth between the switch positions a few times.

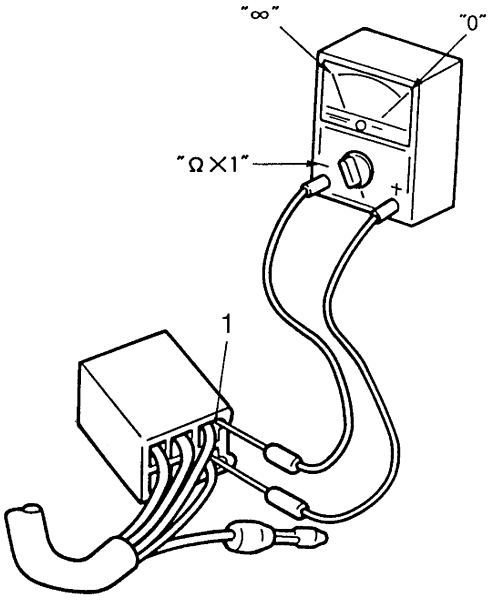

Terminal connections of the switch are shown in the terminal connection diagram below.
The switch positions "a" are shown in the far left column and the switch lead colors are shown in the top row in the switch illustration.

TIP

" ○——○ " indicates continuity between switch terminals (i.e., a closed circuit at each switch position).

The example illustration below shows that:
There is continuity between red and brown when the switch is "ON".

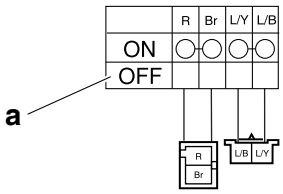

CHECKING THE BULBS AND BULB SOCKETS

TIP

Do not check any of the lights that use LEDs.

Check each bulb and bulb socket for damage or wear, proper connections, and also for continuity between the terminals.
Damage/wear → Repair or replace the bulb, bulb socket or both.
Improperly connected → Properly connect.
No continuity → Repair or replace the bulb, bulb socket or both.

Types of bulbs

The bulbs used on this vehicle are shown in the illustration on the left.

- Bulbs "a" and "b" are used for the headlights and usually use a bulb holder that must be detached before removing the bulb. The majority of these types of bulbs can be removed from their respective socket by turning them counterclockwise.
- Bulbs "c" is used for turn signal and can be removed from the socket by pushing and turning the bulb counterclockwise.

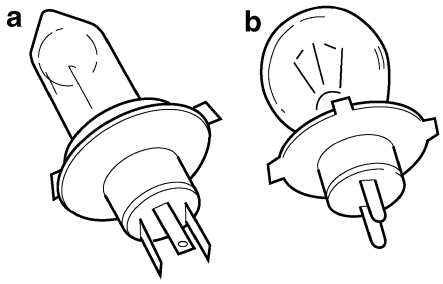

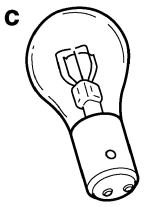

Checking the condition of the bulbs

The following procedure applies to all of the bulbs.

1. Remove:
   - Bulb

WARNING

Since the headlight bulb gets extremely hot, keep flammable products and your hands away from the bulb until it has cooled down.

NOTICE

- **Be sure to hold the socket firmly when removing the bulb. Never pull the lead, otherwise it may be pulled out of the terminal in the coupler.**
- **Avoid touching the glass part of the headlight bulb to keep it free from oil, otherwise the transparency of the glass, the life of the bulb, and the luminous flux will be adversely affected. If the headlight bulb gets soiled, thoroughly it with a cloth moistened with alcohol or lacquer thinner.**

2. Check:
   - Bulb (for continuity)
     (with the pocket tester)
     No continuity → Replace.

Pocket tester
90890-03112
Analog pocket tester
YU-03112-C

TIP

Before checking for continuity, set the pocket tester to "0" and to the "Ω × 1" range.

▼▼▼▼▼▼▼▼▼▼▼▼▼▼▼▼▼▼▼▼▼▼▼▼▼▼▼▼▼▼▼▼▼▼

a. Connect the positive tester probe to terminal "1" and the negative tester probe to terminal "2", and check the continuity.
b. Connect the positive tester probe to terminal "1" and the negative tester probe to terminal "3", and check the continuity.
c. If either of the readings indicate no continuity, replace the bulb.

▲▲▲▲▲▲▲▲▲▲▲▲▲▲▲▲▲▲▲▲▲▲▲▲▲▲▲▲▲▲▲▲▲▲

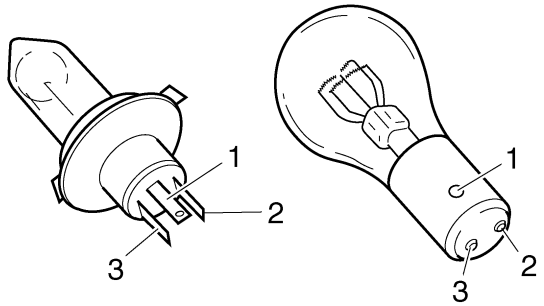

Checking the condition of the bulb sockets
The following procedure applies to all of the bulb sockets.
1. Check:
   - Bulb socket (for continuity) (with the pocket tester)
     No continuity → Replace.

Pocket tester
90890-03112
Analog pocket tester
YU-03112-C

TIP

Check each bulb socket for continuity in the same manner as described in the bulb section; however, note the following.

▼▼▼▼▼▼▼▼▼▼▼▼▼▼▼▼▼▼▼▼▼▼▼▼▼▼▼▼▼▼▼▼▼▼

a. Install a good bulb into the bulb socket.
b. Connect the pocket tester probes to the respective leads of the bulb socket.
c. Check the bulb socket for continuity. If any of the readings indicate no continuity, replace the bulb socket.

▲▲▲▲▲▲▲▲▲▲▲▲▲▲▲▲▲▲▲▲▲▲▲▲▲▲▲▲▲▲▲▲▲▲

CHECKING THE FUSES
The following procedure applies to all of the fuses.

NOTICE

To avoid a short circuit, always turn off the meter when checking or replacing a fuse.

1. Remove:
   - Side cover (left/right)
   - Seat
     Refer to “GENERAL CHASSIS” on page 5-1.
2. Check:
   - Main fuse “1”
   - Radiator fan motor fuse “2”

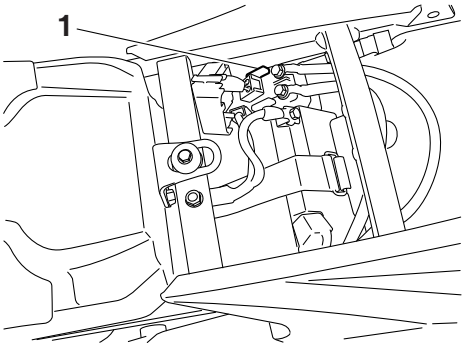

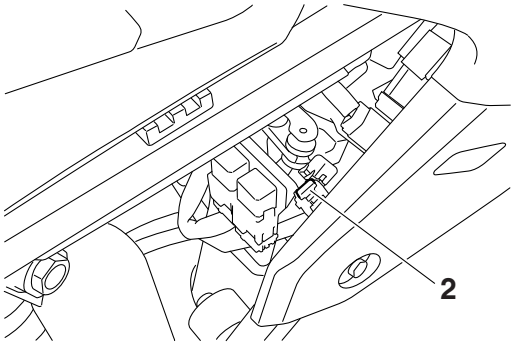

▼▼▼▼▼▼▼▼▼▼▼▼▼▼▼▼▼▼▼▼▼▼▼▼▼▼▼▼▼▼▼▼▼▼

a. Connect the pocket tester to the fuse and check the continuity.

TIP

Set the pocket tester selector to “Ω × 1”.

Pocket tester
90890-03112
Analog pocket tester
YU-03112-C

b. If the pocket tester indicates “∞”, replace the fuse.

▲▲▲▲▲▲▲▲▲▲▲▲▲▲▲▲▲▲▲▲▲▲▲▲▲▲▲▲▲▲▲▲▲▲

3. Replace:
   - Fuse

▼▼▼▼▼▼▼▼▼▼▼▼▼▼▼▼▼▼▼▼▼▼▼▼▼▼▼▼▼▼▼▼▼▼

a. The meter light goes off.
b. Install a new fuse of the correct amperage rating.
c. Turn on the meter light to verify if the electrical circuit is operational.
d. If the fuse immediately blows again, check the electrical circuit.

Fuses	Amperage rating	Q’ty
Main	15 A	1
Spare	15 A	1
Radiator fan motor	5 A	1

WARNING

Never use a fuse with an amperage rating other than that specified. Improvising or using a fuse with the wrong amperage rating may cause extensive damage to the electrical system, cause the lighting and ignition systems to malfunction and could possibly cause a fire.

▲▲▲▲▲▲▲▲▲▲▲▲▲▲▲▲▲▲▲▲▲▲▲▲▲▲▲▲▲▲▲▲▲▲

4. Install:
   - Seat
   - Side cover (left/right)
     Refer to “GENERAL CHASSIS” on page 5-1.

CHECKING AND CHARGING THE BATTERY

WARNING

Batteries generate explosive hydrogen gas and contain electrolyte which is made of poisonous and highly caustic sulfuric acid. Therefore, always follow these preventive measures:
- **Wear protective eye gear when handling or working near batteries.**
- **Charge batteries in a well-ventilated area.**
- **Keep batteries away from fire, sparks or open flames (e.g., welding equipment, lighted cigarettes).**
- **DO NOT SMOKE when charging or handling batteries.**
- **KEEP BATTERIES AND ELECTROLYTE OUT OF REACH OF CHILDREN.**
- **Avoid bodily contact with electrolyte as it can cause severe burns or permanent eye injury.**

FIRST AID IN CASE OF BODILY CONTACT:
EXTERNAL
- **Skin — Wash with water.**
- **Eyes — Flush with water for 15 minutes and get immediate medical attention.**

INTERNAL
- **Drink large quantities of water or milk followed with milk of magnesia, beaten egg or vegetable oil. Get immediate medical attention.**

NOTICE

- **This is a VRLA (Valve Regulated Lead Acid) battery. Never remove the sealing caps because the balance between cells will not be maintained and battery performance will deteriorate.**
- **Charging time, charging amperage and charging voltage for a VRLA (Valve Regulated Lead Acid) battery are different from those of conventional batteries. The VRLA (Valve Regulated Lead Acid) battery should be charged according to the appropriate charging method. If the battery is overcharged, the electrolyte level will drop considerably. Therefore, take special care when charging the battery.**

TIP

Since VRLA (Valve Regulated Lead Acid) batteries are sealed, it is not possible to check the charge state of the battery by measuring the specific gravity of the electrolyte. Therefore, the charge of the battery has to be checked by measuring the voltage at the battery terminals.

1. Remove:
   - Side cover (left/right)
   - Seat
     Refer to “GENERAL CHASSIS” on page 5-1.
2. Disconnect:
   - Battery leads
     (from the battery terminals)

NOTICE

First, disconnect the negative battery lead “1”, and then positive battery lead “2”.

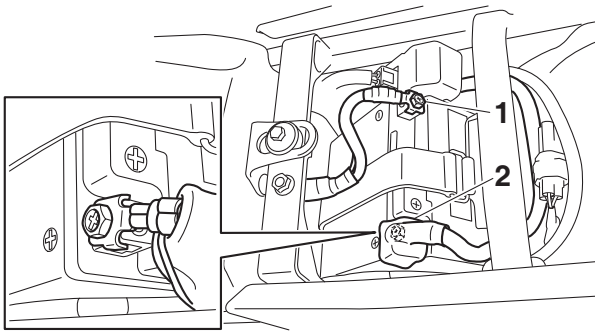

3. Remove:
   - Battery
4. Check:
   - Battery charge

▼▼▼▼▼▼▼▼▼▼▼▼▼▼▼▼▼▼▼▼▼▼▼▼▼▼▼▼▼▼▼▼▼▼

a. Connect a pocket tester to the battery terminals.

- Positive tester probe → positive battery terminal
- Negative tester probe → negative battery terminal

TIP

- The charge state of a VRLA (Valve Regulated Lead Acid) battery can be checked by measuring its open-circuit voltage (i.e., the voltage when the positive battery terminal is disconnected).
- No charging is necessary when the open-circuit voltage equals or exceeds 12.8 V.

b. Check the charge of the battery, as shown in the charts and the following example.

Example
Open-circuit voltage = 12.0 V
Charging time = 6.5 hours
Charge of the battery = 20–30%

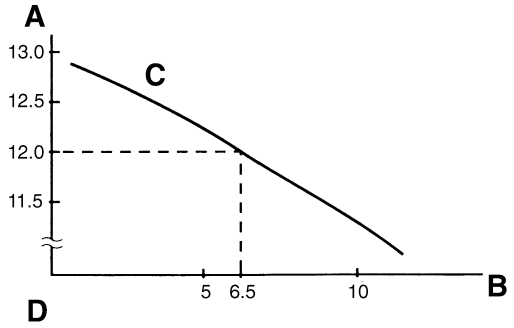

A. Open-circuit voltage (V)
B. Charging time (hours)
C. Relationship between the open-circuit voltage and the charging time at 20°C (68°F)
D. These values vary with the temperature, the condition of the battery plates, and the electrolyte level.

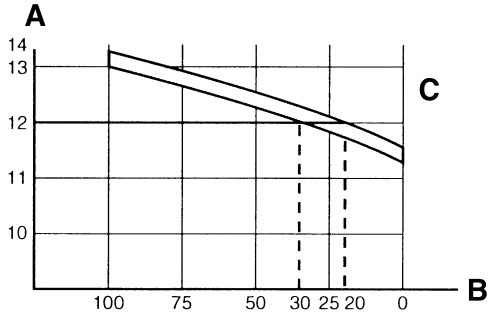

A. Open-circuit voltage (V)
B. Charging condition of the battery (%)
C. Ambient temperature 20°C (68°F)

▲▲▲▲▲▲▲▲▲▲▲▲▲▲▲▲▲▲▲▲▲▲▲▲▲▲▲▲▲▲▲▲

5. Charge:
   - Battery
     (refer to the appropriate charging method)

WARNING

Do not quick charge a battery.

NOTICE

- **Do not use a high-rate battery charger since it forces a high-amperage current into the battery quickly and can cause battery overheating and battery plate damage.**
- **If it is impossible to regulate the charging current on the battery charger, be careful not to overcharge the battery.**
- **When charging a battery, be sure to remove it from the vehicle. (If charging has to be done with the battery mounted on the vehicle, disconnect the negative battery lead from the battery terminal.)**
- **To reduce the chance of sparks, do not plug in the battery charger until the battery charger leads are connected to the battery.**
- **Before removing the battery charger lead clips from the battery terminals, be sure to turn off the battery charger.**
- **Make sure the battery charger lead clips are in full contact with the battery terminal and that they are not shorted. A corroded battery charger lead clip may generate heat in the contact area and a weak clip spring may cause sparks.**
- **If the battery becomes hot to the touch at any time during the charging process, disconnect the battery charger and let the battery cool before reconnecting it. Hot batteries can explode!**
- **As shown in the following illustration, the open-circuit voltage of a VRLA (Valve Regulated Lead Acid) battery stabilizes about 30 minutes after charging has been completed. Therefore, wait 30 minutes after charging is completed before measuring the open-circuit voltage.**

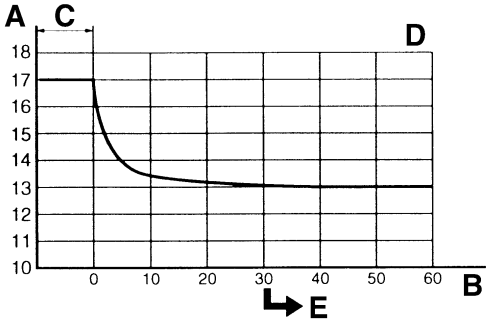

A. Open-circuit voltage (V)
B. Time (minutes)
C. Charging
D. Ambient temperature 20°C (68°F)
E. Check the open-circuit voltage.

▼▼▼▼▼▼▼▼▼▼▼▼▼▼▼▼▼▼▼▼▼▼▼▼▼▼▼▼▼▼▼▼

Charging method using a variable-current (voltage) charger

a. Measure the open-circuit voltage prior to charging.

TIP

Voltage should be measured 30 minutes after the engine is stopped.

b. Connect a charger and ammeter to the battery and start charging.

TIP

Set the charging voltage to 16–17 V.If the setting is lower, charging will be insufficient. If too high, the battery will be over-charged.

c. Make sure that the current is higher than the standard charging current written on the battery.

TIP

If the current is lower than the standard charging current written on the battery, set the charging voltage adjust dial at 20–24 V and monitor the amperage for 3–5 minutes to check the battery.

- Standard charging current is reached
  Battery is good.
- Standard charging current is not reached
  Replace the battery.

d. Adjust the voltage so that the current is at the standard charging level.
e. Set the time according to the charging time suitable for the open-circuit voltage.
f. If charging requires more than 5 hours, it is advisable to check the charging current after a lapse of 5 hours. If there is any change in the amperage, readjust the voltage to obtain the standard charging current.
g. Measure the battery open-circuit voltage after leaving the battery unused for more than 30 minutes.

12.8 V or more --- Charging is complete.
12.7 V or less --- Recharging is required.
Under 12.0 V --- Replace the battery.

▲▲▲▲▲▲▲▲▲▲▲▲▲▲▲▲▲▲▲▲▲▲▲▲▲▲▲▲▲▲▲▲▲

▼▼▼▼▼▼▼▼▼▼▼▼▼▼▼▼▼▼▼▼▼▼▼▼▼▼▼▼▼▼▼▼▼

Charging method using a constant voltage charger

a. Measure the open-circuit voltage prior to charging.

TIP

Voltage should be measured 30 minutes after the engine is stopped.

b. Connect a charger and ammeter to the battery and start charging.
c. Make sure that the current is higher than the standard charging current written on the battery.

TIP

If the current is lower than the standard charging current written on the battery, this type of battery charger cannot charge the VRLA (Valve Regulated Lead Acid) battery. A variable voltage charger is recommended.

d. Charge the battery until the battery's charging voltage is 15 V.

TIP

Set the charging time at 20 hours (maximum).

e. Measure the battery open-circuit voltage after leaving the battery unused for more than 30 minutes.

12.8 V or more --- Charging is complete.
12.7 V or less --- Recharging is required.
Under 12.0 V --- Replace the battery.

▲▲▲▲▲▲▲▲▲▲▲▲▲▲▲▲▲▲▲▲▲▲▲▲▲▲▲▲▲▲▲▲▲

6. Install:
   - Battery terminals
7. Connect:
   - Battery leads
     (to the battery terminals)

NOTICE

First, connect the positive battery lead "1", and then the negative battery lead "2".

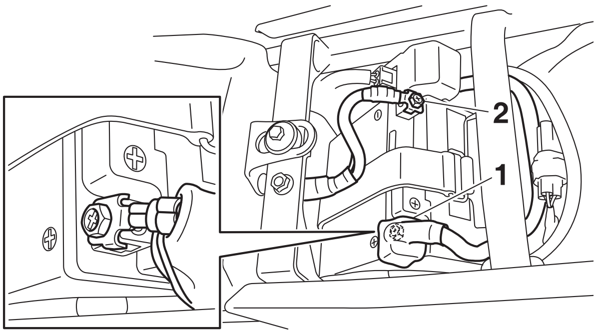

8. Check:
   - Battery terminals
     Dirt → Clean with a wire brush.
     Loose connection → Connect properly.
9. Lubricate:
   - Battery band

	Recommended lubricant **Dielectric grease**

10. Install:
    - Seat
    - Side cover (left/right)
      Refer to "GENERAL CHASSIS" on page 5-1.

CHECKING THE RELAYS

Check each switch for continuity with the pocket tester. If the continuity reading is incorrect, replace the relay.

Pocket tester
90890-03112
Analog pocket tester
YU-03112-C

1. Disconnect the relay from the wire harness.
2. Connect the pocket tester (Ω × 1) and battery (12 V) to the relay terminal as shown. Check the relay operation.
   Out of specification → Replace.

Starter relay

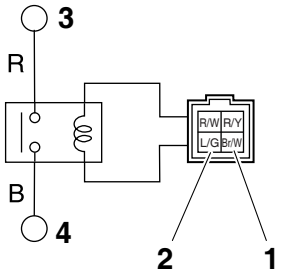

1. Positive battery terminal
2. Negative battery terminal
3. Positive tester probe
4. Negative tester probe

Result
Continuity
(between “3” to “4”)

Main relay

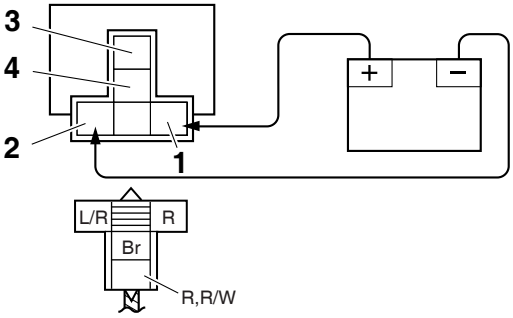

1. Positive battery terminal
2. Negative battery terminal
3. Positive tester probe
4. Negative tester probe

Result
Continuity
(between “3” to “4”)

Starting circuit cut-off relay

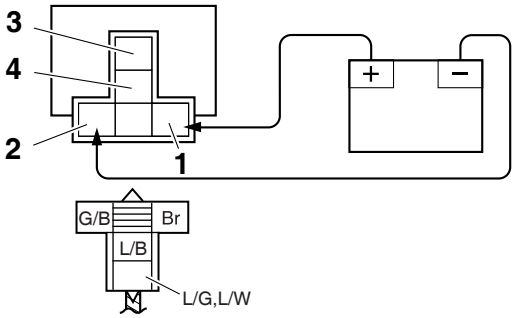

1. Positive battery terminal
2. Negative battery terminal
3. Positive tester probe
4. Negative tester probe

Result
Continuity
(between “3” to “4”)

Headlight relay

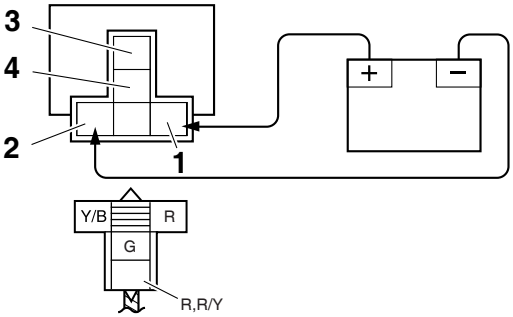

1. Positive battery terminal
2. Negative battery terminal
3. Positive tester probe
4. Negative tester probe

Result
Continuity
(between “3” to “4”)

Radiator fan motor relay

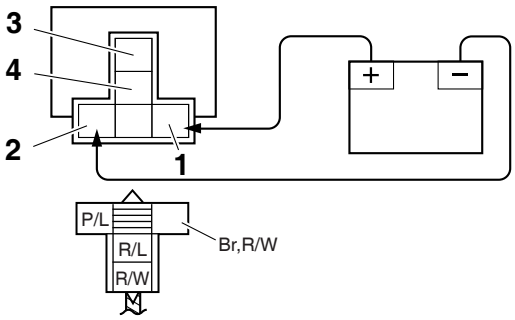

1. Positive battery terminal
2. Negative battery terminal
3. Positive tester probe
4. Negative tester probe

Result
Continuity
(between “3” to “4”)

CHECKING THE DIODE

1. Check:
   - Diode
     Out of specification → Replace.

Pocket tester
90890-03112
Analog pocket tester
YU-03112-C

TIP

The pocket tester and the analog pocket tester readings are shown in the following table.

No continuity
Tester positive lead → Sky blue “1”
Tester negative lead → Green/Black “2”
Continuity
Tester positive lead → Green/Black “2”
Tester negative lead → Sky blue “1”
No continuity
Tester positive lead → Red “3”
Tester negative lead → Red/Blue “4”
Continuity
Tester positive lead → Red/Blue “4”
Tester negative lead → Red “3”

▼▼▼▼▼▼▼▼▼▼▼▼▼▼▼▼▼▼▼▼▼▼▼▼▼▼▼▼▼▼▼▼▼▼

a. Disconnect the diode from the wire harness.
b. Connect the pocket tester (Ω × 1) to the diode coupler as shown.
c. Check the diode for continuity.
d. Check the diode for no continuity.

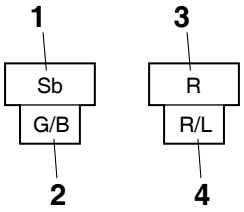

▲▲▲▲▲▲▲▲▲▲▲▲▲▲▲▲▲▲▲▲▲▲▲▲▲▲▲▲▲▲▲▲▲▲

CHECKING THE IGNITION SPARK GAP

1. Check:
   - Ignition spark gap
     Out of specification → Perform the ignition system troubleshooting, starting with step 4. Refer to “TROUBLESHOOTING” on page 9-4.

Minimum ignition spark gap
6.0 mm (0.24 in)

TIP

If the ignition spark gap is within specification, the ignition system circuit is operating normally.

▼▼▼▼▼▼▼▼▼▼▼▼▼▼▼▼▼▼▼▼▼▼▼▼▼▼▼▼▼▼▼▼▼▼

a. Remove the spark plug cap from the spark plug.
b. Connect the ignition checker “1” as shown.

Ignition checker
90890-06754
Oppama pet–4000 spark checker
YM-34487

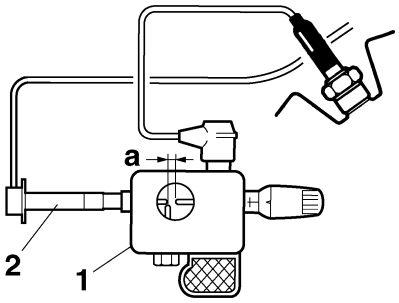

2. Spark plug cap

c. Push the engine stop switch.
d. Measure the ignition spark gap “a”.
e. Crank the engine by pushing the start switch and gradually increase the spark gap until a misfire occurs.

▲▲▲▲▲▲▲▲▲▲▲▲▲▲▲▲▲▲▲▲▲▲▲▲▲▲▲▲▲▲▲▲▲▲

CHECKING THE SPARK PLUG CAP

1. Remove:
   - Spark plug cap
     (from the spark plug lead)
2. Check:
   - Spark plug cap resistance
     Out of specification → Replace.

Spark plug cap resistance
10 kΩ

▼▼▼▼▼▼▼▼▼▼▼▼▼▼▼▼▼▼▼▼▼▼▼▼▼▼▼▼▼▼▼▼▼▼

a. Connect the pocket tester (Ω × 1k) to the spark plug cap.

Pocket tester
90890-03112
Analog pocket tester
YU-03112-C

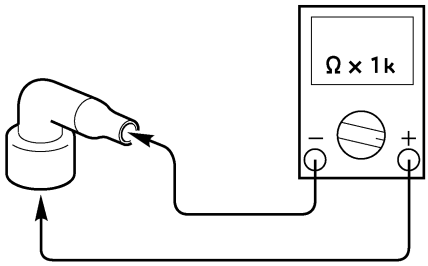

b. Measure the spark plug cap resistance.

▲▲▲▲▲▲▲▲▲▲▲▲▲▲▲▲▲▲▲▲▲▲▲▲▲▲▲▲▲▲▲▲▲▲

CHECKING THE IGNITION COIL

1. Disconnect:
   - Ignition coil terminal (from the sub wire harness)
   - Spark plug cap (from the ignition coil)
2. Check:
   - Primary coil resistance
     Out of specification → Replace.

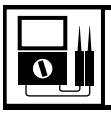

Primary coil resistance
2.16–2.64 Ω

▼▼▼▼▼▼▼▼▼▼▼▼▼▼▼▼▼▼▼▼▼▼▼▼▼▼▼▼▼▼▼▼▼▼

a. Connect the pocket tester (Ω × 1) to the ignition coil.

Pocket tester
90890-03112
Analog pocket tester
YU-03112-C

- Positive tester probe →
  Ignition coil terminal 1 “1”
- Negative tester probe →
  Ignition coil terminal 2 “2”

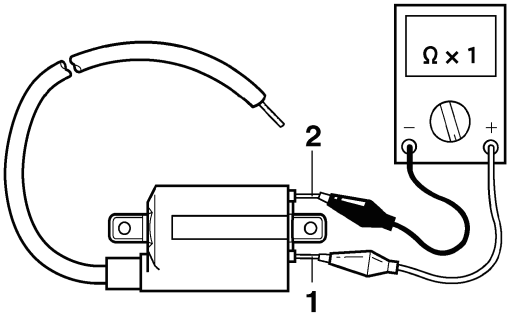

b. Measure the primary coil resistance.

▲▲▲▲▲▲▲▲▲▲▲▲▲▲▲▲▲▲▲▲▲▲▲▲▲▲▲▲▲▲▲▲▲▲

3. Check:
   - Secondary coil resistance
     Out of specification → Replace.

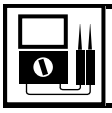

Secondary coil resistance
8.64–12.96 kΩ

▼▼▼▼▼▼▼▼▼▼▼▼▼▼▼▼▼▼▼▼▼▼▼▼▼▼▼▼▼▼▼▼▼▼

a. Connect the pocket tester (Ω × 1k) to the ignition coil.

Pocket tester
90890-03112
Analog pocket tester
YU-03112-C

- Positive tester probe →
  Ignition coil terminal 1 “1”
- Negative tester probe →
  Spark plug lead “2”

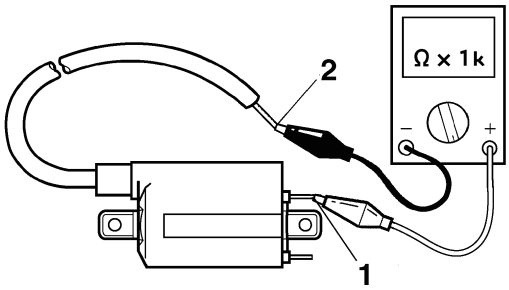

b. Measure the secondary coil resistance.

▲▲▲▲▲▲▲▲▲▲▲▲▲▲▲▲▲▲▲▲▲▲▲▲▲▲▲▲▲▲▲▲▲▲

CHECKING THE CRANKSHAFT POSITION SENSOR

1. Disconnect:
   - Crankshaft position sensor coupler (from the wire harness)
2. Check:
   - Crankshaft position sensor resistance
     Out of specification → Replace.

Crankshaft position sensor resistance
228–342 Ω (Gy–B)

▼▼▼▼▼▼▼▼▼▼▼▼▼▼▼▼▼▼▼▼▼▼▼▼▼▼▼▼▼▼▼▼▼▼

a. Connect the pocket tester (Ω × 100) to the crankshaft position sensor coupler.

Pocket tester
90890-03112
Analog pocket tester
YU-03112-C

- Positive tester probe → Gray "1"
- Negative tester probe → Black "2"

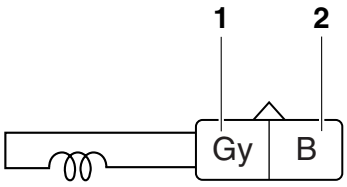

b. Measure the crankshaft position sensor resistance.

▲▲▲▲▲▲▲▲▲▲▲▲▲▲▲▲▲▲▲▲▲▲▲▲▲▲▲▲▲▲▲▲▲▲

CHECKING THE LEAN ANGLE SENSOR

1. Remove:
   - Lean angle sensor (from the bracket)
2. Check:
   - Lean angle sensor out put voltage
     Out of specification → Replace.

Lean angle sensor out put voltage
Less than 45° "a"
0.4–1.4V
More than 45° "b"
3.7–4.4V

▼▼▼▼▼▼▼▼▼▼▼▼▼▼▼▼▼▼▼▼▼▼▼▼▼▼▼▼▼▼▼▼▼▼

a. Connect the lean angle sensor coupler to the wire harness.
b. Connect the pocket tester (DC 20 V) to the lean angle sensor coupler as shown.

Pocket tester
90890-03112
Analog pocket tester
YU-03112-C
Test harness– lean angle sensor (6P)
90890-03209
Test harness– lean angle sensor (6P)
YU-03209

- Positive tester probe → Yellow/Green "1"
- Negative tester probe → Black/Blue "2"

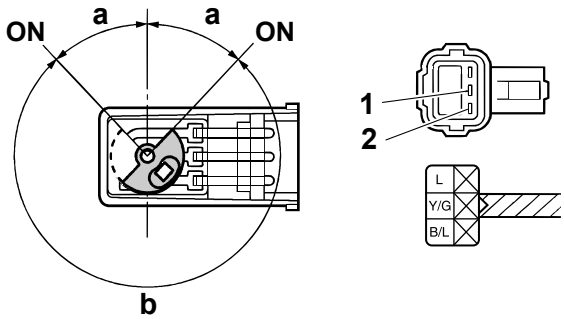

c. Incline the lean angle sensor.
d. Measure the lean angle sensor out put voltage.

▲▲▲▲▲▲▲▲▲▲▲▲▲▲▲▲▲▲▲▲▲▲▲▲▲▲▲▲▲▲▲▲▲▲

CHECKING THE STARTER MOTOR OPERATION

1. Check:
   - Coolant temperature sensor
     Does not operate → Perform the electric starting system troubleshooting, starting with step 4.
     Refer to "ELECTRIC STARTING SYSTEM" on page 9-6.

▼▼▼▼▼▼▼▼▼▼▼▼▼▼▼▼▼▼▼▼▼▼▼▼▼▼▼▼▼▼▼▼▼▼

a. Connect the positive battery terminal "1" and starter motor lead "2" with a jumper lead "3".

WARNING

- **Handle the coolant temperature sensor with special care.**
- **Never subject the coolant temperature sensor to strong shocks. If the coolant temperature sensor is dropped, replace it.**

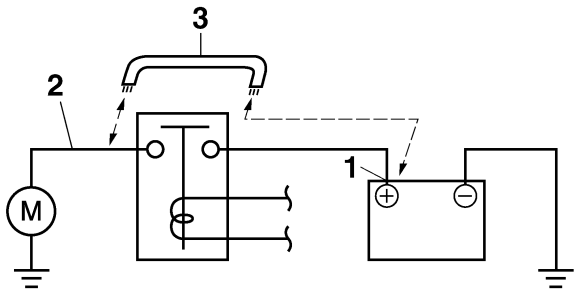

b. Check the starter motor operation.

▲▲▲▲▲▲▲▲▲▲▲▲▲▲▲▲▲▲▲▲▲▲▲▲▲▲▲▲▲▲▲▲▲▲

CHECKING THE STATOR COIL

1. Disconnect:
   - Stator coil coupler (from the wire harness)
2. Check:
   - Stator coil resistance
     Out of specification → Replace the stator coil.

	Stator coil resistance **0.528–0.792 Ω (W–W)**

▼▼▼▼▼▼▼▼▼▼▼▼▼▼▼▼▼▼▼▼▼▼▼▼▼▼▼▼▼▼▼▼▼▼

a. Connect the pocket tester (Ω × 1) to the stator coil coupler as shown.

	Pocket tester **90890-03112** **Analog pocket tester** **YU-03112-C**

- Positive tester probe → White "1"
- Negative tester probe → White "2"

- Positive tester probe → White "1"
- Negative tester probe → White "3"

- Positive tester probe → White "2"
- Negative tester probe → White "3"

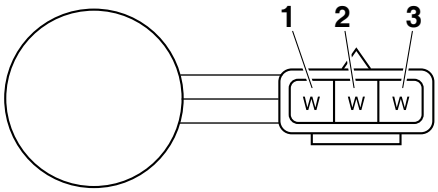

b. Measure the stator coil resistance.

▲▲▲▲▲▲▲▲▲▲▲▲▲▲▲▲▲▲▲▲▲▲▲▲▲▲▲▲▲▲▲▲▲▲

CHECKING THE RECTIFIER/REGULATOR

1. Check:
   - Charging voltage
     Out of specification → Replace the rectifier/regulator.

	Charging voltage **14 V at 5000 r/min**

▼▼▼▼▼▼▼▼▼▼▼▼▼▼▼▼▼▼▼▼▼▼▼▼▼▼▼▼▼▼▼▼▼▼

a. Set the digital tachometer to the ignition coil.
b. Connect the pocket tester (DC 20 V) to the rectifier/regulator coupler as shown.

	Pocket tester **90890-03112** **Analog pocket tester** **YU-03112-C**

- Positive tester probe → Red "1"
- Negative tester probe → Black "2"

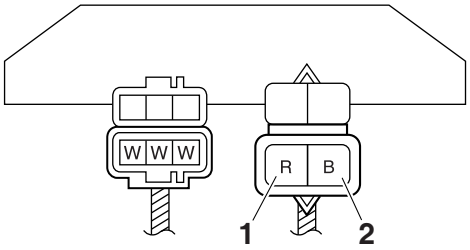

c. Start the engine and let it run at approximately 5000 r/min.
d. Measure the charging voltage.

▲▲▲▲▲▲▲▲▲▲▲▲▲▲▲▲▲▲▲▲▲▲▲▲▲▲▲▲▲▲▲▲▲▲

CHECKING THE SPEED SENSOR

1. Check:
   - Speed sensor output voltage
     Out of specification → Replace.

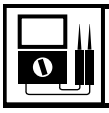	**Output voltage reading cycle** **0.6V to 4.8V to 0.6V to 4.8V**

▼▼▼▼▼▼▼▼▼▼▼▼▼▼▼▼▼▼▼▼▼▼▼▼▼▼▼▼▼▼▼▼▼▼

a. Connect the test harness-speed sensor (3P) to the speed sensor coupler and wire harness.
b. Connect the pocket tester (DC20V) to the test harness-speed sensor (3P).

	**Pocket tester** **90890-03112** **Analog pocket tester** **YU-03112-C** **Test harness– speed sensor 5TJ (3P)** **90890-03228** **Test harness– speed sensor 5TJ (3P)** **YU-03228**

- Positive tester probe →
  White “1”
- Negative tester probe →
  Black “2”

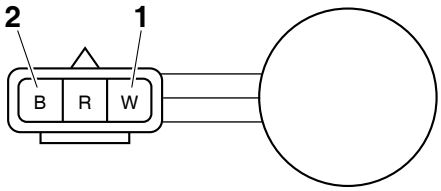

c. Set the main switch to “ON”.
d. Elevate the front wheel and slowly turn it.
e. Measure the voltage (DC 5 V) of white and black/white. With the front wheel slowly rotating, voltage alternates between 0 V and 5 V.

▲▲▲▲▲▲▲▲▲▲▲▲▲▲▲▲▲▲▲▲▲▲▲▲▲▲▲▲▲▲▲▲▲▲

CHECKING THE FUEL SENDER

1. Drain the gasoline.
2. Disconnect:
   - Fuel sender coupler
     (from the fuel sender)
3. Remove:
   - Fuel sender
     (from the fuel tank)
4. Check:
   - Fuel sender resistance
     Out of specification → Replace the fuel sender.

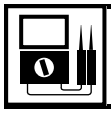	**Fuel sender resistance** **1.35–1.90 kΩ at 25°C (77°F)**

▼▼▼▼▼▼▼▼▼▼▼▼▼▼▼▼▼▼▼▼▼▼▼▼▼▼▼▼▼▼▼▼▼▼

a. Connect the pocket tester (Ω × 1k) to the fuel sender as shown.

	**Pocket tester** **90890-03112** **Analog pocket tester** **YU-03112-C**

- Positive tester probe →
  Green “2”
- Negative tester probe →
  Black “1”

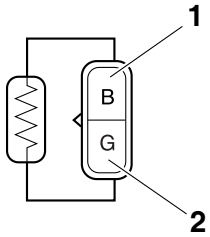

b. Measure the resistance of the fuel sender.

▲▲▲▲▲▲▲▲▲▲▲▲▲▲▲▲▲▲▲▲▲▲▲▲▲▲▲▲▲▲▲▲▲▲

CHECKING THE RESISTER

1. Disconnect:
   - Resister coupler
     (from the wire harness)
2. Check:
   - Resister resistance
     Out of specification → Replace the resister.

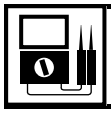	**Resister resistance** **64.6–71.4 Ω**

▼▼▼▼▼▼▼▼▼▼▼▼▼▼▼▼▼▼▼▼▼▼▼▼▼▼▼▼▼▼▼▼▼▼

a. Connect the pocket tester (Ω × 10) to the resister as shown.

	**Pocket tester** **90890-03112** **Analog pocket tester** **YU-03112-C**

- Positive tester probe →
  Black “1”
- Negative tester probe →
  Black “2”

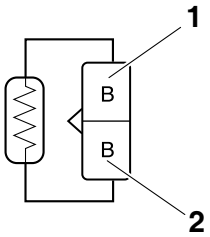

b. Measure the resistance of the resister.

▲▲▲▲▲▲▲▲▲▲▲▲▲▲▲▲▲▲▲▲▲▲▲▲▲▲▲▲▲▲▲▲

CHECKING THE RADIATOR FAN MOTOR

1. Check:
   - Radiator fan motor
     Faulty/rough movement → Replace.

▼▼▼▼▼▼▼▼▼▼▼▼▼▼▼▼▼▼▼▼▼▼▼▼▼▼▼▼▼▼▼▼

a. Disconnect the radiator fan motor coupler from the wire harness.
b. Connect the battery (DC 12 V) as shown.

- Positive battery terminal →
  Blue “1”
- Negative battery terminal →
  Black “2”

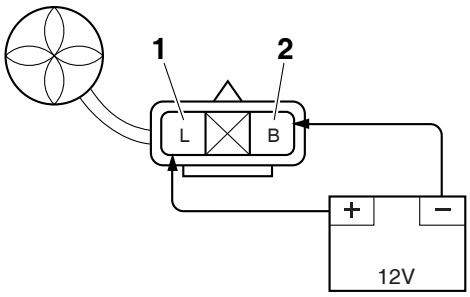

c. Measure the radiator fan motor movement.

▲▲▲▲▲▲▲▲▲▲▲▲▲▲▲▲▲▲▲▲▲▲▲▲▲▲▲▲▲▲▲▲

CHECKING THE COOLANT TEMPERATURE SENSOR

1. Remove:
   - Coolant temperature sensor

WARNING

- **Handle the coolant temperature sensor with special care.**
- **Never subject the coolant temperature sensor to strong shocks. If the coolant temperature sensor is dropped, replace it.**

2. Check:
   - Coolant temperature sensor resistance
     Out of specification → Replace.

Coolant temperature sensor resistance
2.51–2.78 kΩ at 20 °C (2.51–2.78 kΩ at 68 °F)
210–221 Ω at 100 °C (210–221 Ω at 212 °F)

▼▼▼▼▼▼▼▼▼▼▼▼▼▼▼▼▼▼▼▼▼▼▼▼▼▼▼▼▼▼▼▼

a. Connect the pocket tester (Ω × 1k/100) to the coolant temperature sensor.

Pocket tester
90890-03112
Analog pocket tester
YU-03112-C

- Positive tester probe →
  Green/White “1”
- Negative tester probe →
  Black/Blue “2”

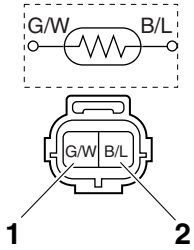

b. Immerse the coolant temperature sensor in a container filled with coolant.

TIP

Make sure the coolant temperature sensor terminals do not get wet.

c. Place a thermometer in the coolant.
d. Slowly heat the coolant, and then let it cool to the specified temperature indicated in the table.
e. Check the coolant temperature sensor for continuity at the temperatures indicated in the table.

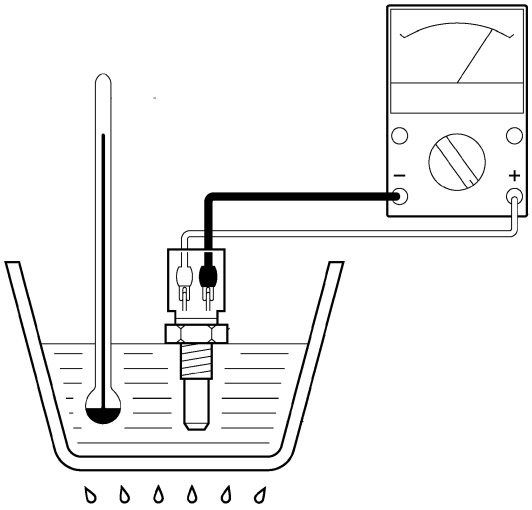

▲▲▲▲▲▲▲▲▲▲▲▲▲▲▲▲▲▲▲▲▲▲▲▲▲▲▲▲▲▲▲▲

CHECKING THE THROTTLE POSITION SENSOR

1. Remove:
   - Throttle position sensor (from the throttle body)

WARNING

- **Handle the throttle position sensor with special care.**
- **Never subject the throttle position sensor to strong shocks. If the throttle position sensor is dropped, replace it.**

2. Check:
   - Throttle position sensor maximum resistance
     Out of specification → Replace.

	Resistance **6.30 kΩ**

▼▼▼▼▼▼▼▼▼▼▼▼▼▼▼▼▼▼▼▼▼▼▼▼▼▼▼▼▼▼▼▼

a. Connect the pocket tester (Ω × 1k) to the throttle position sensor.

	Pocket tester **90890-03112** **Analog pocket tester** **YU-03112-C**

- Positive tester probe →
  Blue "1"
- Negative tester probe →
  Black/Blue "2"

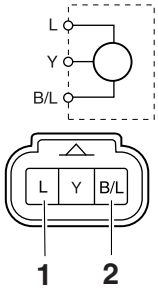

b. Check the throttle position sensor maximum resistance.

▲▲▲▲▲▲▲▲▲▲▲▲▲▲▲▲▲▲▲▲▲▲▲▲▲▲▲▲▲▲▲▲

3. Install:
   - Throttle position sensor

TIP

When mounting the throttle position sensor, adjust its angle properly. Refer to "ADJUSTING THE THROTTLE POSITION SENSOR" on page 8-11.

CHECKING THE THROTTLE POSITION SENSOR INPUT VOLTAGE

1. Check:
   - Throttle position sensor input voltage
     Out of specification → Replace the ECU.

	Throttle position sensor input voltage **4–6 V**

▼▼▼▼▼▼▼▼▼▼▼▼▼▼▼▼▼▼▼▼▼▼▼▼▼▼▼▼▼▼▼▼

a. Connect the test harness S-pressure sensor (3P) to the throttle position sensor coupler and the wire harness.
b. Connect the pocket tester (20 VDC) to the test harness S-pressure sensor (3P).

	Pocket tester **90890-03112** **Analog pocket tester** **YU-03112-C** **Test harness S– pressure sensor (3P)** **90890-03207** **Test harness S– pressure sensor (3P)** **YU-03207**

- Positive tester probe →
  Blue “1”
- Negative tester probe →
  Black/Blue “2”

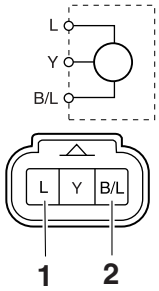

c. Start the engine.
d. Measure the throttle position sensor input voltage.

▲▲▲▲▲▲▲▲▲▲▲▲▲▲▲▲▲▲▲▲▲▲▲▲▲▲▲▲▲▲▲▲

CHECKING THE INTAKE AIR PRESSURE SENSOR

1. Check:
   - Intake air pressure sensor output voltage
     Out of specification → Replace.

Intake air pressure sensor output voltage
3.61–3.67 V at 101.3 kPa (3.61–3.67 V at 1.01kgf/cm^2, 3.61–3.67 V at 14.7 psi)

▼▼▼▼▼▼▼▼▼▼▼▼▼▼▼▼▼▼▼▼▼▼▼▼▼▼▼▼▼▼▼▼

a. Connect the pocket tester (20 VDC) to the intake air pressure sensor coupler (wire harness side).

Pocket tester
90890-03112
Analog pocket tester
YU-03112-C

- Positive tester probe →
  Pink “1”
- Negative tester probe →
  Black/Blue “2”

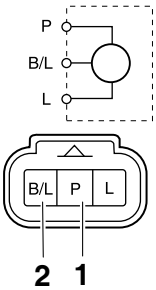

b. Start the engine.
c. Measure the intake air pressure sensor output voltage.

▲▲▲▲▲▲▲▲▲▲▲▲▲▲▲▲▲▲▲▲▲▲▲▲▲▲▲▲▲▲▲▲

CHECKING THE INTAKE AIR TEMPERATURE SENSOR

1. Remove:
   - Intake air temperature sensor
     (from the air filter case)

WARNING

- **Handle the intake air temperature sensor with special care.**
- **Never subject the intake air temperature sensor to strong shocks. If the intake air temperature sensor is dropped, replace it.**

2. Check:
   - Intake air temperature sensor resistance
     Out of specification → Replace.

Intake air temperature sensor resistance
290–390 Ω at 80 °C (290–390 Ω 176 °F)

▼▼▼▼▼▼▼▼▼▼▼▼▼▼▼▼▼▼▼▼▼▼▼▼▼▼▼▼▼▼▼▼

a. Connect the pocket tester (Ω × 1k/100) to the intake air temperature sensor terminal.

Pocket tester
90890-03112
Analog pocket tester
YU-03112-C

- Positive tester probe →
  Brown/White “1”
- Negative tester probe →
  Black/Blue “2”

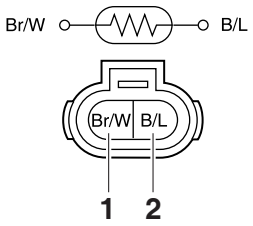

▲▲▲▲▲▲▲▲▲▲▲▲▲▲▲▲▲▲▲▲▲▲▲▲▲▲▲▲▲▲▲▲

CHECKING THE FUEL INJECTOR

1. Remove:
   - Fuel injector
     Refer to “THROTTLE BODY” on page 8-7.
2. Check:
   - Fuel injector resistance
     Out of specification → Replace.

	Fuel injector resistance **12.0 Ω**

▼▼▼▼▼▼▼▼▼▼▼▼▼▼▼▼▼▼▼▼▼▼▼▼▼▼▼▼▼▼▼▼

a. Disconnect the fuel injector coupler from the fuel injector.
b. Connect the pocket tester (Ω × 10) to the fuel injector coupler.

	Pocket tester **90890-03112** **Analog pocket tester** **YU-03112-C**

- Positive tester probe →
  Injector terminal “1”
- Negative tester probe →
  Injector terminal “2”

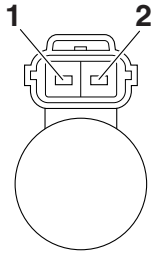

c. Measure the fuel injector resistance.

▲▲▲▲▲▲▲▲▲▲▲▲▲▲▲▲▲▲▲▲▲▲▲▲▲▲▲▲▲▲▲▲

TROUBLESHOOTING

TROUBLESHOOTING

GENERAL INFORMATION

TIP

The following guide for troubleshooting does not cover all the possible causes of trouble. It should be helpful, however, as a guide to basic troubleshooting. Refer to the relative procedure in this manual for checks, adjustments, and replacement of parts.

STARTING FAILURES

Engine

1. Cylinder and cylinder head
   - Loose spark plug
   - Loose cylinder head or cylinder
   - Damaged cylinder head gasket
   - Damaged cylinder gasket
   - Worn or damaged cylinder
   - Incorrect valve clearance
   - Improperly sealed valve
   - Incorrect valve-to-valve-seat contact
   - Incorrect valve timing
   - Faulty valve spring
   - Seized valve
2. Piston and piston ring(s)
   - Improperly installed piston ring
   - Damaged, worn or fatigued piston ring
   - Seized piston ring
   - Seized or damaged piston
3. Air filter
   - Improperly installed air filter
   - Clogged air filter element
4. Crankcase and crankshaft
   - Improperly assembled crankcase
   - Seized crankshaft

Fuel system

1. Fuel tank
   - Empty fuel tank
   - Clogged fuel tank breather hose
   - Deteriorated or contaminated fuel
   - Clogged or damaged fuel hose
2. Fuel pump
   - Faulty fuel pump
3. Throttle body
   - Deteriorated or contaminated fuel
   - Sucked-in air

Electrical system

1. Spark plug
   - Incorrect spark plug gap
   - Incorrect spark plug heat range
   - Fouled spark plug
   - Worn or damaged electrode
   - Worn or damaged insulator
2. Ignition coil
   - Cracked or broken ignition coil body
   - Broken or shorted primary or secondary coils
3. Ignition system
   - Faulty ECU
   - Faulty crankshaft position sensor
   - Broken generator rotor woodruff key
4. Switches and wiring
   - Faulty ECU
   - Faulty engine stop switch
   - Broken or shorted wiring
   - Faulty neutral switch
   - Improperly grounded circuit
   - Loose connections

INCORRECT ENGINE IDLING SPEED

Engine

1. Cylinder and cylinder head
   - Incorrect valve clearance
   - Damaged valve train components
2. Air filter
   - Clogged air filter element

Fuel system

1. Throttle body
   - Damaged or loose throttle body joint
   - Improperly synchronized throttle bodies
   - Improper throttle cable free play
   - Flooded throttle body

Electrical system

1. Spark plug
   - Incorrect spark plug gap
   - Incorrect spark plug heat range
   - Fouled spark plug
   - Worn or damaged electrode
   - Worn or damaged insulator
   - Faulty spark plug cap
2. Ignition coil
   - Broken or shorted primary or secondary coils
   - Cracked or broken ignition coil
3. Ignition system
   - Faulty ECU
   - Faulty crankshaft position sensor
   - Broken generator rotor woodruff key

POOR MEDIUM-AND-HIGH-SPEED PERFORMANCE

Refer to “STARTING FAILURES” on page 10-1.

Engine

1. Air filter
   - Clogged air filter element

Fuel system

1. Fuel pump
   - Faulty fuel pump
2. Throttle body
   - Defective throttle body
3. ECU
   - Faulty ECU

SHIFTING IS DIFFICULT

Refer to “CLUTCH” on page 6-40.

SHIFT PEDAL DOES NOT MOVE

Engine

1. Shift shaft
   - Bent shift shaft
2. Shift drum and shift forks
   - Foreign object in a shift drum groove
   - Seized shift fork
   - Bent shift fork guide bar
3. Transmission
   - Seized transmission gear
   - Foreign object between transmission gears
   - Improperly assembled transmission

JUMPS OUT OF GEAR

Engine

1. Shift shaft
   - Incorrect shift pedal position
   - Improperly returned stopper lever
2. Shift forks
   - Worn shift fork
3. Shift drum
   - Incorrect axial play
   - Worn shift drum groove
4. Transmission
   - Worn gear dog

CLUTCH SLIPS

Engine

1. Clutch
   - Improperly assembled clutch
   - Loose or fatigued clutch spring
   - Worn friction plate
   - Worn clutch plate
2. Engine oil
   - Incorrect oil level
   - Incorrect oil viscosity (low)
   - Deteriorated oil

CLUTCH DRAGS

Engine

1. Clutch
   - Unevenly tensioned clutch springs
   - Warped pressure plate
   - Bent clutch plate
   - Swollen friction plate
   - Bent clutch push rod
   - Damaged clutch boss
   - Burnt primary driven gear bushing
2. Engine oil
   - Incorrect oil level
   - Incorrect oil viscosity (high)
   - Deteriorated oil

OVERHEATING

Engine

1. Cylinder head and piston
   - Heavy carbon buildup
   - Clogged coolant passages
2. Engine oil
   - Incorrect oil level
   - Incorrect oil viscosity
   - Inferior oil quality

Cooling system

1. Coolant
   - Low coolant level
2. Radiator
   - Damaged or leaking radiator
   - Faulty radiator cap
   - Bent or damaged radiator fin
3. Water pump
   - Damaged or faulty water pump
   - Damaged hose
   - Improperly connected hose
   - Damaged pipe
   - Improperly connected pipe

Fuel system
1. Throttle body
   - Damaged or loose throttle body joint
2. Air filter
   - Clogged air filter element

Chassis
1. Brake(s)
   - Dragging brake

Electrical system
1. Spark plug
   - Incorrect spark plug gap
   - Incorrect spark plug heat range
2. Ignition system
   - Faulty ECU
   - Faulty coolant temperature sensor

OVERCOOLING

Cooling system
1. Coolant temperature sensor
   - Faulty coolant temperature sensor

POOR BRAKING PERFORMANCE

Chassis
1. Brake(s)
   - Worn brake pad
   - Worn brake disc
   - Air in hydraulic brake system
   - Leaking brake fluid
   - Defective master cylinder kit
   - Faulty brake caliper kit
   - Faulty brake caliper seal
   - Loose union bolt
   - Damaged brake hose
   - Oil or grease on the brake disc
   - Oil or grease on the brake pad
   - Incorrect brake fluid level

FRONT FORK OIL LEAKING

Chassis
1. Front fork
   - Bent, damaged, or rusty inner tube
   - Cracked or damaged outer tube
   - Improperly installed oil seal
   - Damaged oil seal lip
   - Incorrect oil level (high)
   - Loose damper rod assembly bolt
   - Damaged damper rod assembly bolt copper washer
   - Cracked or damaged cap bolt O-ring

FAULTY FRONT FORK LEGS

Chassis
1. Front fork
   - Bent or damaged inner tube
   - Bent or damaged outer tube
   - Broken fork spring
   - Bent or damaged damper rod
   - Incorrect oil viscosity
   - Incorrect oil level

UNSTABLE HANDLING

Chassis
1. Handlebar
   - Bent or improperly installed handlebar
2. Steering head components
   - Improperly installed upper bracket
   - Improperly installed lower bracket (improperly tightened ring nut)
   - Bent steering stem
   - Damaged ball bearing or bearing race
3. Front fork leg (s)
   - Uneven oil levels (both front fork legs)
   - Unevenly tensioned fork spring (both front fork legs)
   - Broken fork spring
   - Bent or damaged inner tube
   - Bent or damaged outer tube
4. Swingarm
   - Worn bearing or bushing
   - Bent or damaged swingarm
5. Rear shock absorber assembly (-ies)
   - Faulty rear shock absorber spring
   - Leaking oil or gas
6. Tire (s)
   - Uneven tire pressures (front and rear)
   - Incorrect tire pressure
   - Uneven tire wear
7. Wheel (s)
   - Incorrect wheel balance
   - Broken or loose spoke
   - Damaged wheel bearing
   - Bent or loose wheel axle
   - Excessive wheel runout
8. Frame
   - Bent frame
   - Damaged steering head pipe
   - Improperly installed bearing race

HEADLIGHT DOES NOT COME ON

Electrical system

1. Headlight
   - Fuse open circuit
   - Wrong headlight bulb
   - Too many electrical accessories
   - Hard charging
   - Incorrect connection
   - Improperly grounded circuit
   - Poor contacts (start switch)
   - Burnt-out headlight bulb

HEADLIGHT BULB BURNT OUT

Electrical system

1. Headlight
   - Wrong headlight bulb
   - Faulty battery
   - Faulty rectifier/regulator
   - Improperly grounded circuit
   - Faulty start switch
   - Headlight bulb life expired

TAILLIGHT DOES NOT COME ON

Electrical system

1. Taillight
   - Wrong taillight LED
   - Too many electrical accessories
   - Incorrect connection
   - Faulty battery

LIST OF SELF-DIAGNOSTIC AND FAIL-SAFE ACTIONS

LIST OF DIAGNOSTIC CODES

Fault code	Item	Page
12	Crankshaft position sensor: no normal signals are received from the crankshaft position sensor.	9-35
13	Intake air pressure sensor: open or short circuit detected.	9-37
14	Intake air pressure sensor: hose system malfunction (clogged or detached hose)	9-38
15	Throttle position sensor: open or short circuit detected.	9-39
16	Throttle position sensor: stuck throttle position sensor is detected.	9-41
21	Coolant temperature sensor: open or short circuit detected.	9-42
22	Intake air temperature sensor: open or short circuit detected.	9-43
30	Latch up detected.	9-44
33	Ignition coil: open or short circuit detected in the primary lead of the ignition coil.	9-45
39	Injector: open or short circuit detected.	9-47
41	Lean angle sensor: open or short circuit detected.	9-48
43	Fuel system voltage: incorrect voltage supplied to the fuel injector and fuel pump.	9-49
44	EEPROM fault code number: an error is detected while reading or writing on EEPROM.	9-50
46	Charging voltage is abnormal.	9-51
50	Faulty ECU memory. (When this malfunction is detected in the ECU, the fault code number might not appear on the meter.)	9-52

COMMUNICATION ERROR WITH YAMAHA DIAGNOSTIC TOOL

Fault code	Item	Page
Waiting for connection	No communication signal is received from the ECU.	9-52
Er-2	Signals from the ECU cannot be received within the specified period of time.	9-53
Er-3	Data from the ECU cannot be received correctly.	9-54
Er-4	Registered data cannot be received from the Yamaha diagnostic tool.	9-55

SENSOR OPERATION TABLE

Diagnostic code No.	Item	Display	Procedure
01	Throttle position sensor signal • Fully closed position • Fully opened position	• 11–14 • 109–116	• Check with throttle valve fully closed. • Check with throttle valve fully open.
03	Intake air pressure	Displays the intake air pressure.	Operate the throttle while pushing the start switch. (If the display value changes, the performance is OK.)
05	Intake air temperature	Displays the intake air temperature.	Compare the actually measured intake air temperature with the Yamaha diagnostic tool display value.
06	Coolant temperature	When engine is cold: Displays temperature closer to air temperature. When engine is hot: Displays current coolant temperature.	Compare the actually measured coolant temperature with the Yamaha diagnostic tool display value.
07	Vehicle speed pulses	Vehicle speed pulse 0–999	Check that the number increases when the front wheel is rotated. The number is cumulative and does not reset each time the wheel is stopped.
08	Lean angle sensor • Upright • Overturned	Displays the output voltage. • 0.4–1.4 • 3.7–4.4	Remove the lean angle sensor, and incline it more than 45 degrees.
09	Monitor voltage	Displays the fuel system voltage. • Approximately 12.0 (V)	—
21	Neutral switch • Gear in neutral • Gear not in neutral	• ON • OFF	Operate the shift pedal.
60	EEPROM fault code display • No fault • CO adjustment value • Setting tool adjustment values 0–8 for fuel injection amount or ignition timing	• 00 • 01 • 07	—
61	Malfunction history (△) code No. display *1 • There is no history. • There is some history.	• 00 • Other: Displays the fault code of (△).	—

Diagnostic code No.	Item	Display	Procedure
62	Malfunction history (△) code No. erasure *1 • There is no history. • There is some history.	• 00 • Other: Displays the total number of (×) and (△).	Replace all (△) with (○) by the operation start processing.
64	Setting history display • There is no history. • There is some history. • History is unknown (History data is damaged).	Displays the presence or absence of the setting history by Power Tuner. • 00 • 01 • 02	—
65	Setting map erasure • There is no setting. • There is some setting.	Displays the presence or absence of the setting history by Power Tuner. • 00 • 01	Erase all setting maps by the operation start processing.
70	Program version number	Displays a program version No.	—

*1: Symbols used in the explanations of the malfunction history
○: Normal
×: There is currently a malfunction or abnormal condition.
△: A malfunction or abnormal condition occurred previously, but the affected system or component is currently operating normally.

ACTUATOR OPERATION TABLE

Diagnostic code No.	Item	Actuation	Procedure
30	Ignition coil	Actuates the ignition coil five times at one-second intervals. "WARNING" on the Yamaha diagnostic tool blinks five times when the ignition coil is actuated.	Check that a spark is generated five times. • Connect an ignition checker.
36	Injector	Actuates the injector five times at one-second intervals. "WARNING" on the Yamaha diagnostic tool blinks five times when the radiator fan motor relay is actuated.	**TIP: Before performing this operation, be sure to disconnect the fuel pump coupler.** Check that injector is actuated five times by listening for the operating sound.
51	Radiator fan motor relay	Actuates the radiator fan motor relay five times at five-second intervals. "WARNING" on the Yamaha diagnostic tool blinks five times when the radiator fan motor relay is actuated.	Check that the radiator fan motor relay is actuated five times by listening for the operating sound.
52	Headlight relay	Actuates the headlight relay five times at five-second intervals. "WARNING" on the Yamaha diagnostic tool blinks five times when the headlight relay is actuated.	Check that the headlight relay is actuated five times by listening for the operating sound.

WIRING DIAGRAM

WR250F/WR250FF 2015

1. Joint connector
2. Joint connector
3. Joint connector
4. AC magneto
5. Rectifier/regulator
6. Headlight relay
7. Main relay
8. Engine ground
9. Battery
10. Frame ground
11. Starter relay
12. Main fuse
13. Starter motor
14. Starter relay diode
15. Indicator light
16. Engine trouble warning light
17. Fuel level warning light
18. Resistor
19. Fuel sender
20. Diode
21. Coupler for connecting optional part
22. ECU (engine control unit)
23. Ignition coil
24. Spark plug
25. Injector
26. Fuel pump
27. Radiator fan motor relay
28. Radiator fan motor fuse
29. Radiator fan motor
30. Joint connector
31. Intake air temperature sensor
32. Coolant temperature sensor
33. Throttle position sensor
34. Intake air pressure sensor
35. Lean angle sensor
36. Engine stop switch
37. Neutral switch
38. Diode
39. Starting circuit cut-off relay
40. Clutch switch
41. Start switch
42. Joint connector
43. Taillight
44. Headlight
45. Coupler for connecting optional switch
46. Speed sensor
47. Multi-function display
48. Frame ground

A. Wire harness
B. Ignition coil sub-lead
C. Negative battery lead

COLOR CODE

B	Black
Br	Brown
Ch	Chocolate
Dg	Dark green
G	Green
Gy	Gray
L	Blue
Lg	Light green
O	Orange
P	Pink
R	Red
Sb	Sky blue
W	White
Y	Yellow
B/L	Black/Blue
B/O	Black/Orange
B/W	Black/White
B/Y	Black/Yellow
Br/W	Brown/White
G/B	Green/Black
G/W	Green/White
G/Y	Green/Yellow
L/B	Blue/Black
L/G	Blue/Green
L/R	Blue/Red
L/W	Blue/White
L/Y	Blue/Yellow
P/L	Pink/Blue
R/B	Red/Black
R/L	Red/Blue
R/W	Red/White
R/Y	Red/Yellow
W/B	White/Black
Y/B	Yellow/Black
Y/G	Yellow/Green
Y/R	Yellow/Red

PRINTED ON RECYCLED PAPER

PRINTED IN JAPAN
(E)

WR250F/WR250FF 2015
WIRING DIAGRAM

WR250F/WR250FF 2015
SCHÉMA DE CÂBLAGE

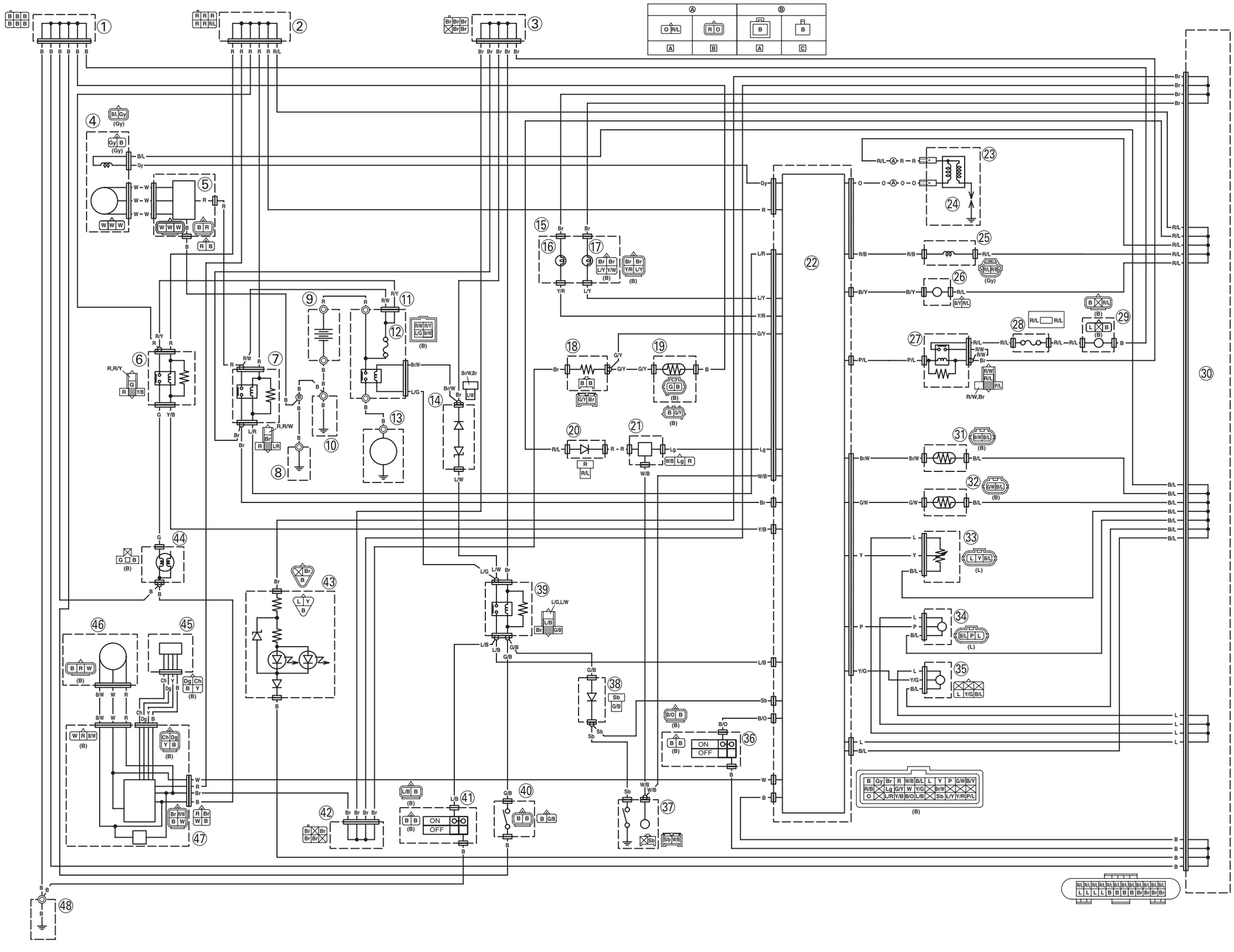

WR250F/WR250FF 2015
WIRING DIAGRAM

WR250F/WR250FF 2015
SCHÉMA DE CÂBLAGE